COVER
stock
8½ x 11

WYC
DRAWING BOOK 6
CHAPTER 2–4

SKILLING, HELLE, CHRISTIANSEN, ROBERTSON — Structural & Civil Engineers

PROJECT: THE WORLD TRADE CENTER | TITLE: CONNECTION DETAILS - INDEX | DATE: 4/ 1/69

REVISIONS
ed 5-1-69

WTCI-22-LERA

6-AB2-	2	DETAIL	101	6-AB2-	39	PUMP PLATFORM		6-AB2-	92	DETAIL	445
6-AB2-	2.1	DETAIL	101	6-AB2-	40	PUMP PLATFORM		6-AB2-	101	DETAIL	450
6-AB2-	2.2	DETAIL	101	6-AB2-	41	PUMP PLATFORM		6-AB2-	102	DETAIL	451
6-AB2-	3	DETAIL	102	6-AB2-	42	PUMP PLATFORM		6-AB2-	103	DETAIL	452
6-AB2-	3.1	DETAIL	102	6-AB2-	43	PUMP PLATFORM		6-AB2-	104	DETAIL	453
6-AB2-	3.2	DETAIL	102	6-AB2-	44	PUMP PLATFORM		6-AB2-	105	DETAIL	454
6-AB2-	4	DETAIL	103	6-AB2-	45	PUMP PLATFORM		6-AB2-	106	DETAIL	455
6-AB2-	5	DETAIL	104	6-AB2-	46	PUMP PLATFORM		6-AB2-	107	DETAIL	456
6-AB2-	7	DETAIL	105	6-AB2-	47	PUMP PLATFORM		6-AB2-	107.1	DETAIL	456
6-AB2-	7.1	DETAIL	105	6-AB2-	52	DETAIL	150-153	6-AB2-	108	DETAIL	457
6-AB2-	7.2	DETAIL	105	6-AB2-	53	DETAIL	154	6-AB2-	109	DETAIL	458
6-AB2-	7.2*	ALTERNATE		6-AB2-	54	DETAIL	155-158	6-AB2-	110	DETAIL	459
6-AB2-	7.3	DETAIL	105	6-AB2-	55	DETAIL	159-160	6-AB2-	111	DETAIL	460
6-AB2-	7.4	DETAIL	105	6-AB2-	56	DETAIL	161	6-AB2-	111.1	DETAIL	460
6-AB2-	7.4*	ALTERNATE		6-AB2-	57	DETAIL	162,166	6-AB2-	111.2	DETAIL	460
6-AB2-	7.5	DETAIL	105	6-AB2-	58	DETAIL	163	6-AB2-	112	DETAIL	461
6-AB2-	7.5*	ALTERNATE		6-AB2-	59	DETAIL	164	6-AB2-	113	DETAIL	462
6-AB2-	7.6	DETAIL	105	6-AB2-	60	DETAIL	165	6-AB2-	114	DETAIL	463
6-AB2-	8	DETAIL	106	6-AB2-	61	DETAIL	167	6-AB2-	114.1	DETAIL	463
6-AB2-	8.1	DETAIL	106	6-AB2-	62	DETAIL	168,169	6-AB2-	116	DETAIL	465
6-AB2-	8.2	DETAIL	106	6-AB2-	73	DETAIL	170	6-AB2-	117	DETAIL	466
6-AB2-	8.3	DETAIL	106	6-AB2-	73.1	DETAIL	170	6-AB2-	118	DETAIL	467
6-AB2-	8.4	DETAIL	106	6-AB2-	73.2	DETAIL	170	6-AB2-	119	DETAIL	468
6-AB2-	9	DETAIL	107	6-AB2-	73.5	DETAIL	171	6-AB2-	120	DETAIL	469
6-AB2-	10	DETAIL	108	6-AB2-	74	DETAIL	172	6-AB2-	121	DETAIL	470
6-AB2-	11	DETAIL	109	6-AB2-	74*	ALTERNATE		6-AB2-	122	DETAIL	471
6-AB2-	11.1	DETAIL	109	6-AB2-	75	DETAIL	173	6-AB2-	123	DETAIL	472
6-AB2-	12	DETAIL	110	6-AB2-	75.1	DETAIL	173	6-AB2-	123.1	DETAIL	472
6-AB2-	13	DETAIL	111	6-AB2-	76	DETAIL	174	6-AB2-	124	DETAIL	473
6-AB2-	13.1	DETAIL	111	6-AB2-	77	DETAIL	175	6-AB2-	125	DETAIL	474
6-AB2-	13.2	DETAIL	111	6-AB2-	77.1	DETAIL	175	6-AB2-	126	DETAIL	475
6-AB2-	13.3	DETAIL	111	6-AB2-	78	DETAIL	176	6-AB2-	128	DETAIL	477
6-AB2-	13.3*	ALTERNATE		6-AB2-	80	DETAIL	178	6-AB2-	130	DETAIL	479
6-AB2-	13.4	DETAIL	111	6-AB2-	80.5	DETAIL	179	6-AB2-	131	DETAIL	480
6-AB2-	13.4*	ALTERNATE		6-AB2-	81	DETAIL	401	6-AB2-	132	DETAIL	481
6-AB2-	13.5	DETAIL	111	6-AB2-	82	DETAIL	403	6-AB2-	133	DETAIL	482
6-AB2-	13.6	DETAIL	111	6-AB2-	83	DETAIL	410	6-AB2-	134	DETAIL	483
6-AB2-	13.7	DETAIL	111	6-AB2-	83.1	DETAIL	411	6-AB2-	135	DETAIL	484
6-AB2-	14	DETAIL	112	6-AB2-	84	DETAIL	419	6-AB2-	136	DETAIL	485
6-AB2-	15	DETAIL	113	6-AB2-	85	DETAIL	418	6-AB2-	137	DETAIL	486
6-AB2-	25	DETAIL	P02	6-AB2-	86	DETAIL	426	6-AB2-	138	DETAIL	487
6-AB2-	30	PUMP PLATFORM		6-AB2-	86.1	DETAIL	427	6-AB2-	139	DETAIL	487
6-AB2-	31	PUMP PLATFORM		6-AB2-	87	DETAIL	407	6-AB2-	139.1	DETAIL	487
6-AB2-	32	TROLLEY SUPPORT		6-AB2-	88	DETAIL	438	6-AB2-	140	DETAIL	488
6-AB2-	33	TROLLEY SUPPORT		6-AB2-	89	DETAIL	433	6-AB2-	142	DETAIL	491
6-AB2-	34	TROLLEY SUPPORT		6-AB2-	90	DETAIL	435	6-AB2-	142.1	DETAIL	491
6-AB2-	35	TROLLEY SUPPORT		6-AB2-	90.1	DETAIL	435	6-AB2-	143	DETAIL	492
6-AB2-	36	TROLLEY SUPPORT		6-AB2-	90.2	DETAIL	435	6-AB2-	144	DETAIL	493
6-AB2-	37	PUMP PLATFORM		6-AB2-	91	DETAIL	440-443				
6-AB2-	38	PUMP PLATFORM		6-AB2-	91.1	DETAIL	440,441				

LICENSED PROFESSIONAL ENGINEER
LESLIE E. ROBERTSON
No. 34360
UNIVERSITY OF THE STATE OF NEW YORK

83

SKILLING, HELLE, CHRISTIANSEN, ROBERTSON — Structural & Civil Engineers

PROJECT: THE WORLD TRADE CENTER | TITLE: CONNECTION DETAILS - INDEX | DATE: 4/ 1/69

REVISIONS

ited 5-1-69

6-AB2-145	DETAIL	494
6-AB2-147	DETAIL	496
6-AB2-148	DETAIL	497
6-AB2-150	DETAIL	499
6-AB2-151	DETAIL	500
6-AB2-152	DETAIL	501,502
6-AB2-152.1	DETAIL	501
6-AB2-153	DETAIL	503,504
6-AB2-153.1	DETAIL	503
6-AB2-154	DETAIL	505,506
6-AB2-155	DETAIL	507
6-AB2-156	DETAIL	508,512
6-AB2-156*	ALTERNATE	
6-AB2-157	DETAIL	509
6-AB2-158	DETAIL	510
6-AB2-160	DETAIL	513
6-AB2-162	DETAIL	515
6-AB2-163	DETAIL	516
6-AB2-164	DETAIL	517
6-AB2-165	DETAIL	518
6-AB2-166	DETAIL	519
6-AB2-167	DETAIL	520
6-AB2-168	DETAIL	521
6-AB2-169	DETAIL	524
6-AB2-170	DETAIL	525
6-AB2-171	DETAIL	526
6-AB2-172	DETAIL	527
6-AB2-173	DETAIL	528
6-AB2-174	DETAIL	529
6-AB2-175	DETAIL	530
6-AB2-176	DETAIL	534
6-AB2-177	DETAIL	535,536
6-AB2-178	DETAIL	537
6-AB2-179	DETAIL	538
6-AB2-180	DETAIL	539
6-AB2-181	DETAIL	540,541
6-AB2-183	VOID	
6-AB2-197	DETAIL	550
6-AB2-198	DETAIL	553

LICENSED PROFESSIONAL ENGINEER — LESLIE E. ROBERTSON — No. 34360 — UNIVERSITY OF THE STATE OF NEW YORK

84

WORTHINGTON, SKILLING, HELLE & JACKSON — Civil & Structural Engineers

PROJECT THE WORLD TRADE CENTER | TITLE CONNECTION DETAIL 101(A) | DATE 5-22-67

REVISIONS

2-9-68

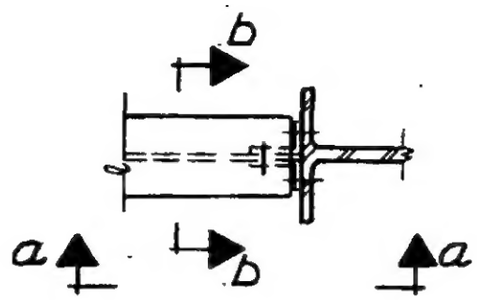

Plan

SCHEDULE	
BM SIZE	DESIGN REACTION*
B 8, 10 WF 12, 10, 8	26.5 K
B 12, 14, 16 WF 16, 14	39.8 K
WF 18	53.0 K
WF 24, 21	66.3 k
WF 30, 27	79.5 K
WF 36, 33	92.8 K

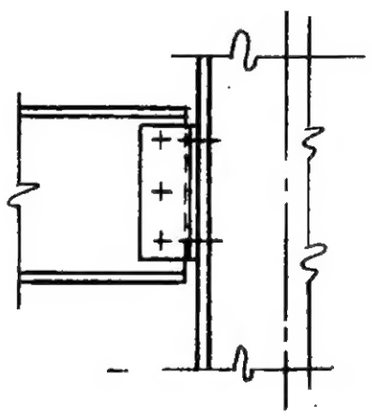

Section a-a

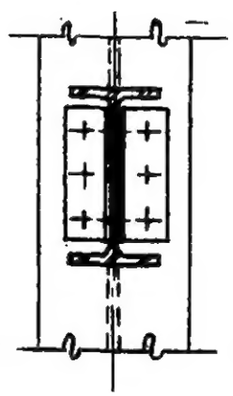

Section b-b

GENERAL NOTES:

For angle size, and bolt size, number and spacing, see AISC part 4.

* Use Design Reaction unless otherwise noted in beam schedule.

LESLIE E. ROBERTSON
No. 24560
REGISTERED PROFESSIONAL ENGINEER
STATE OF NEW YORK

6-482-2

SKILLING - HELLE - CHRISTIANSEN - ROBERTSON Structural & Civil Engineers

PROJECT THE WORLD TRADE CENTER | TITLE CONNECTION DETAIL 101 B, D | DATE 3-14-67

REVISIONS

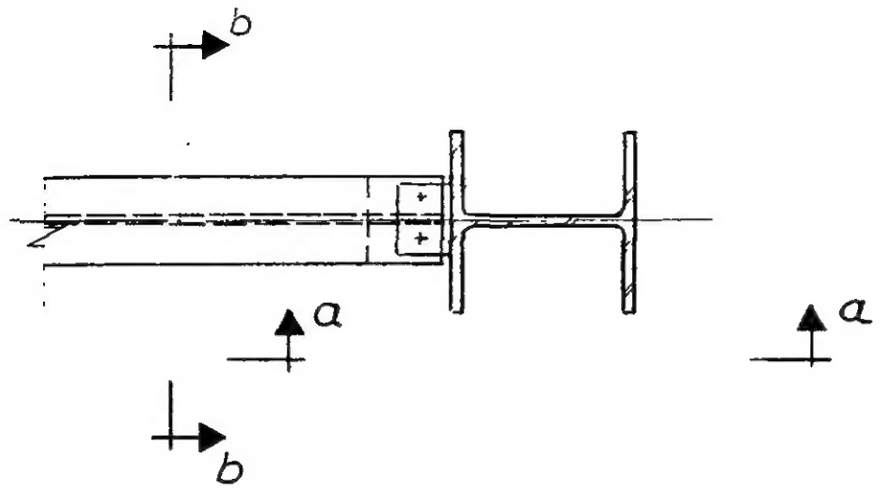

Plan

SCHEDULE			
DETAIL	BEAM SIZE	PL (")	A (")
101 B	10 WF 21 to 10 WF 72	1/2	0'-6"
	10 WF 77 to 10 WF 100	5/8	0'-9"
	12 WF 27 to 12 WF 50	1/2	0'-8"
	12 WF 53 to 12 WF 72	1/2	0'-10"
	12 WF 79 to 12 WF 106	5/8	1'-2"
101 D	12 WF 65 to 12 WF 106	5/8	1'-4"

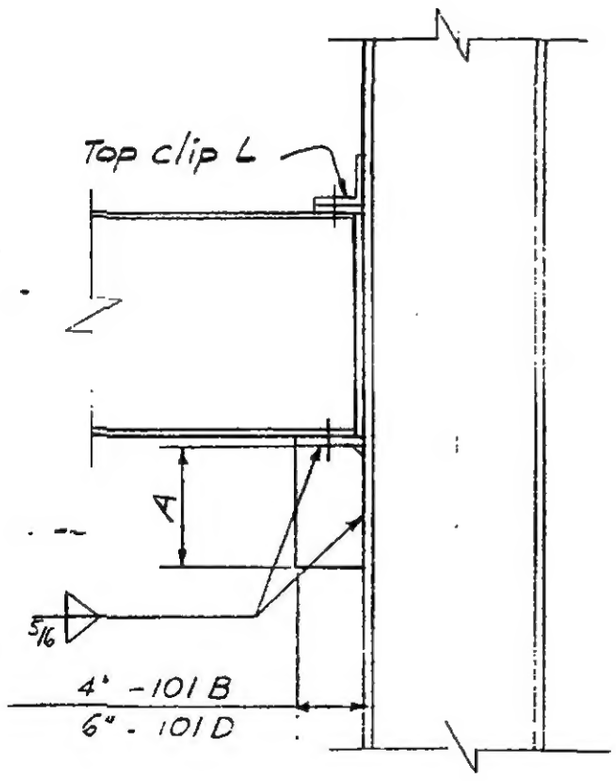

Section a-a

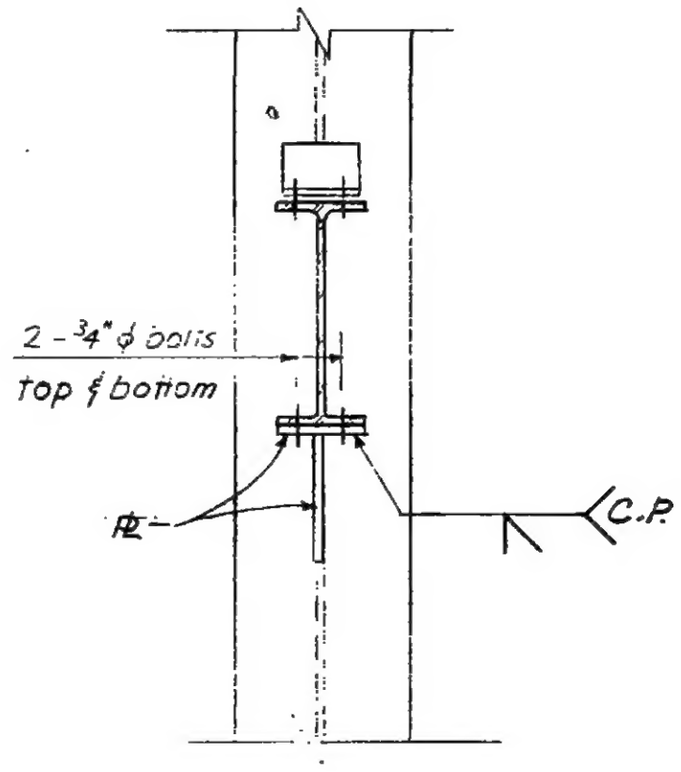

Section b-b

LICENSED PROFESSIONAL ENGINEER
LESLIE E. ROBERTSON
No. 34360
UNIVERSITY OF THE STATE OF NEW YORK

6-AB2-2.1

SKILLING - HELLE - CHRISTIANSEN - ROBERTSON Structural & Civil Engineers

PROJECT THE WORLD TRADE CENTER | TITLE CONNECTION DETAIL 'C1.3' | DATE 3-14-67

REVISIONS

2-?-68

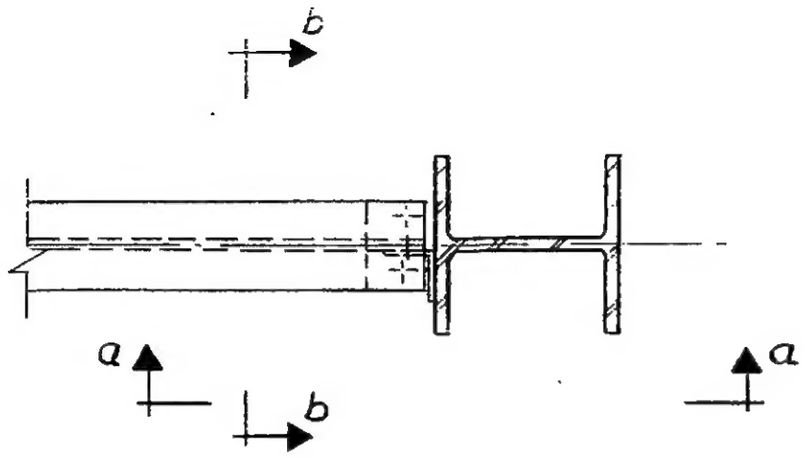

Plan

SCHEDULE				
BEAM SIZE	A	B	℄ P	WELD ①
10 WF	0'-6"	0'-4"	1/2"	5/16
12 WF, 14 WF, 16 WF	0'-9"	0'-4"	1/2"	5/16
21 WF	0'-10"	0'-6"	1/2"	5/16
24 WF	1'-4"	0'-6"	1/2"	5/16
27 WF	1'-6"	0'-7"	5/8"	3/8
33 WF	1'-8"	0'-7 1/2"	3/4"	1/2

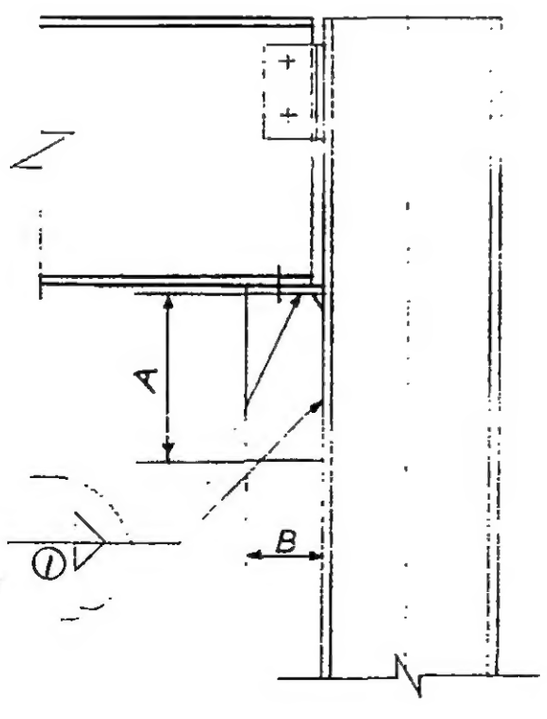

Section a-a

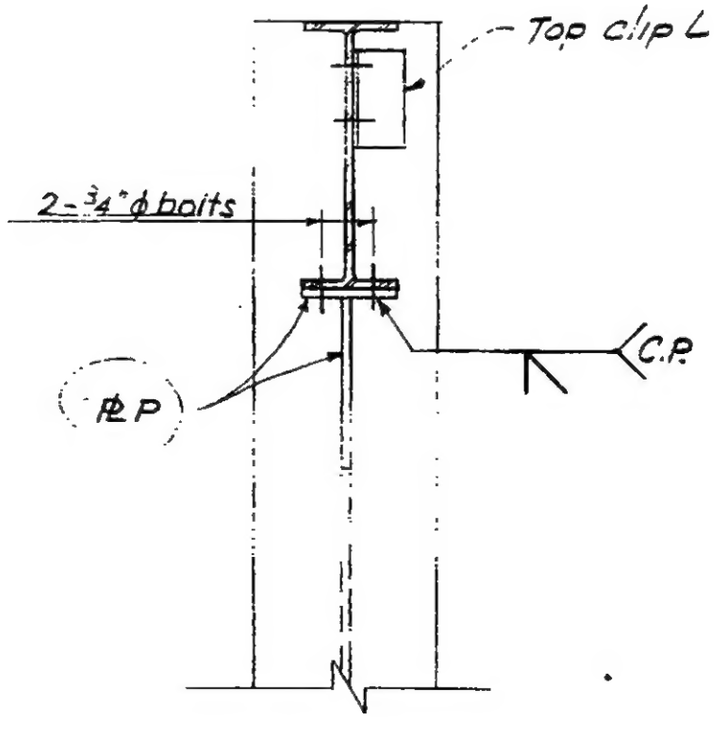

Section b-b

LICENSED PROFESSIONAL ENGINEER
LESLIE E. ROBERTSON
No. 34360
UNIVERSITY OF THE STATE OF NEW YORK

6-AB2-2.2

WORTHINGTON. SKILLING. HELLE & JACKSON Civil & Structural Engineers

PROJECT THE WORLD TRADE CENTER | TITLE CONNECTION DETAIL 102 A | DATE 5-22-67

REVISIONS

8-14-67

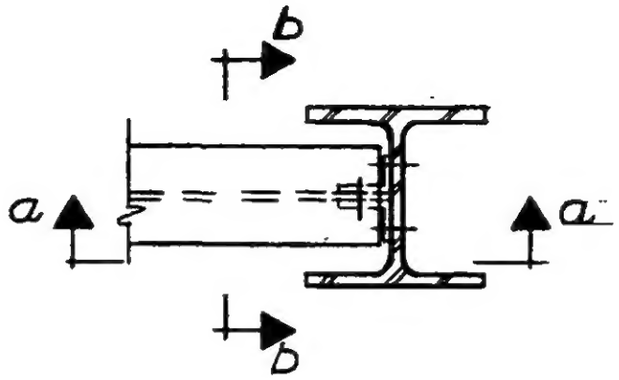

Plan

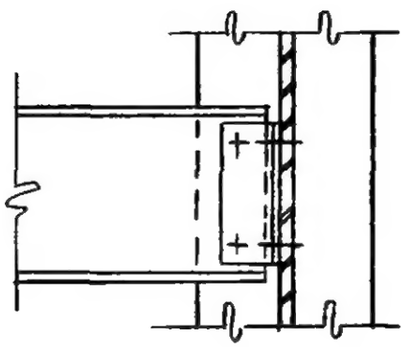

Section a-a

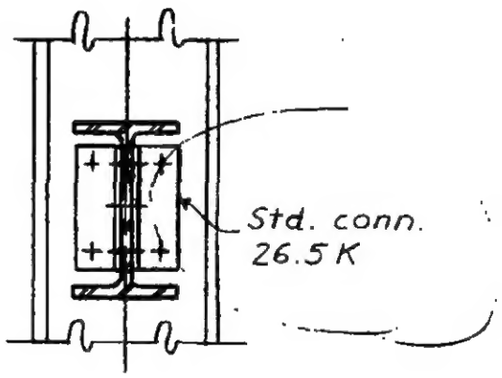

Section b-b

LESLIE E. ROBERTSON
No. 24300
LICENSED PROFESSIONAL ENGINEER
STATE OF NEW YORK

6-AB2-3

SKILLING - HELLE - CHRISTIANSEN - ROBERTSON Structural & Civil Engineers

PROJECT THE WORLD TRADE CENTER | TITLE CONNECTION DETAIL 102 B | DATE 8-14-67

REVISIONS

2-9-68

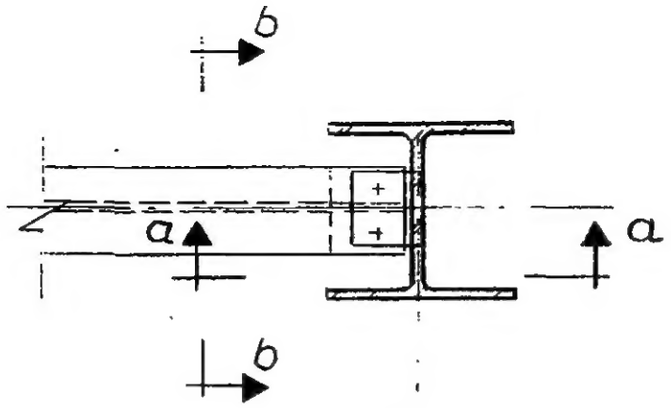

Plan

SCHEDULE			
BEAM SIZE	R (")	A (")	WELD 1
10 WF 21 to 10 WF 72	1/2	0'-6"	5/16
10 WF 77 to 10 WF 100	5/8	0'-9"	5/16
12 WF 27 to 12 WF 50	1/2	0'-8"	5/16
12 WF 53 to 12 WF 72	1/2	0'-10"	5/16
12 WF 79 to 12 WF 106	5/8	1'-2"	5/16
12 WF 120 to 12 WF 190	3/4	1'-6"	3/8

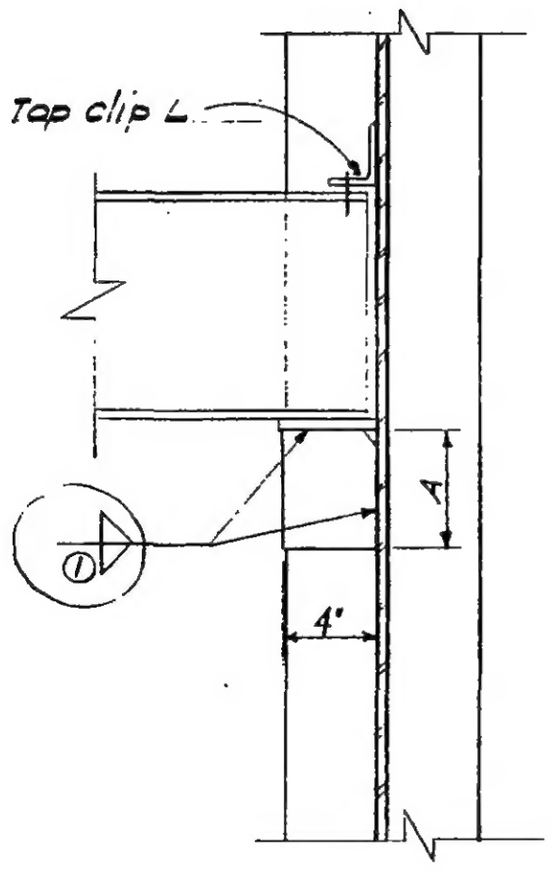

Section a-a

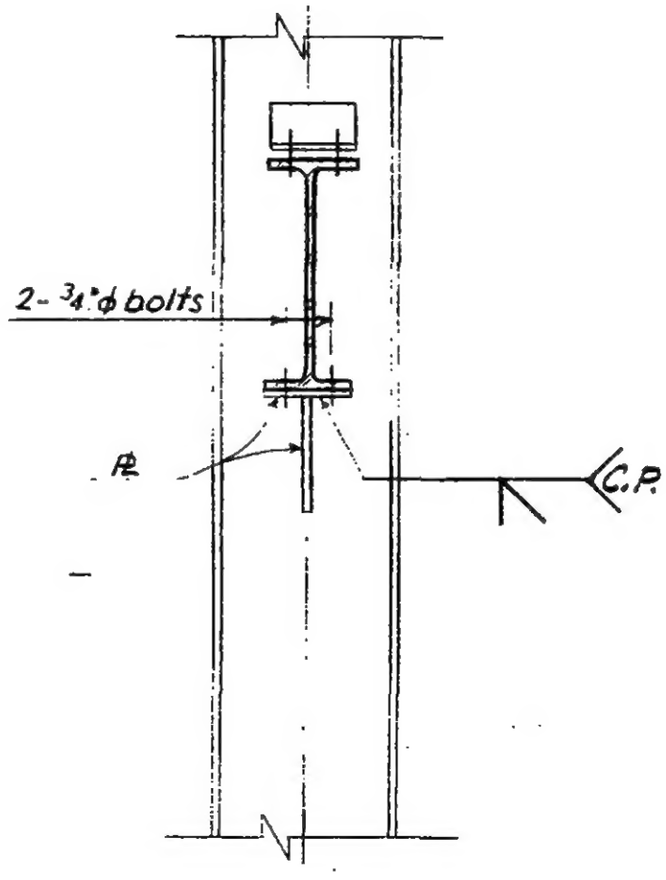

Section b-b

LICENSED PROFESSIONAL ENGINEER
LESLIE E. ROBERTSON
No. 34360
UNIVERSITY OF THE STATE OF NEW YORK

6-AB2-31

SKILLING - HELLE - CHRISTIANSEN - ROBERTSON Structural & Civil Engineers

PROJECT THE WORLD TRADE CENTER | TITLE CONNECTION DETAIL 102 C | DATE 3-14-67

REVISIONS

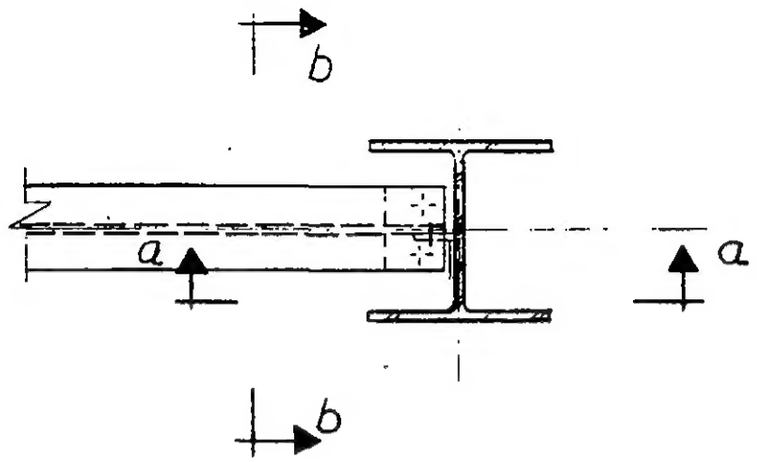

Plan

SCHEDULE		
BEAM SIZE	A	B
10 WF	0'-6"	0'-4"
12WF, 14WF, 16WF	0'-9"	0'-4"
21 WF	0'-10"	0'-6"
24 WF	1'-4"	0'-6"

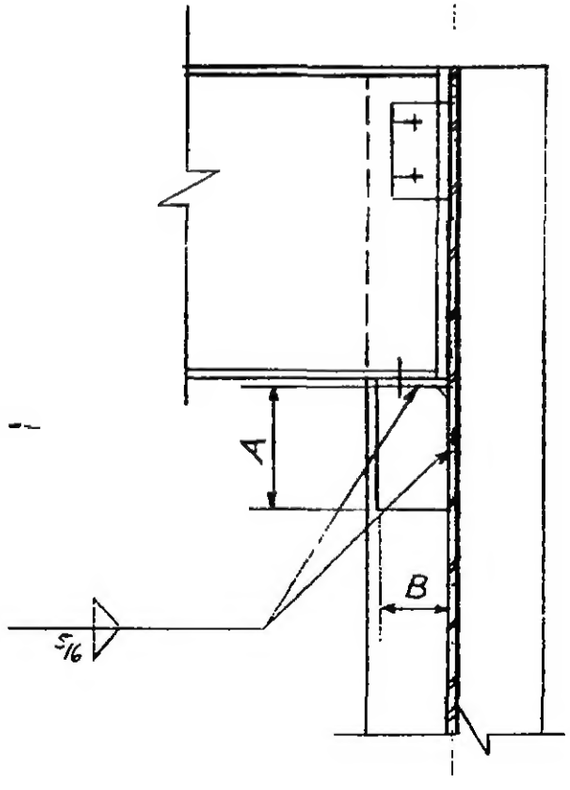

Section a-a

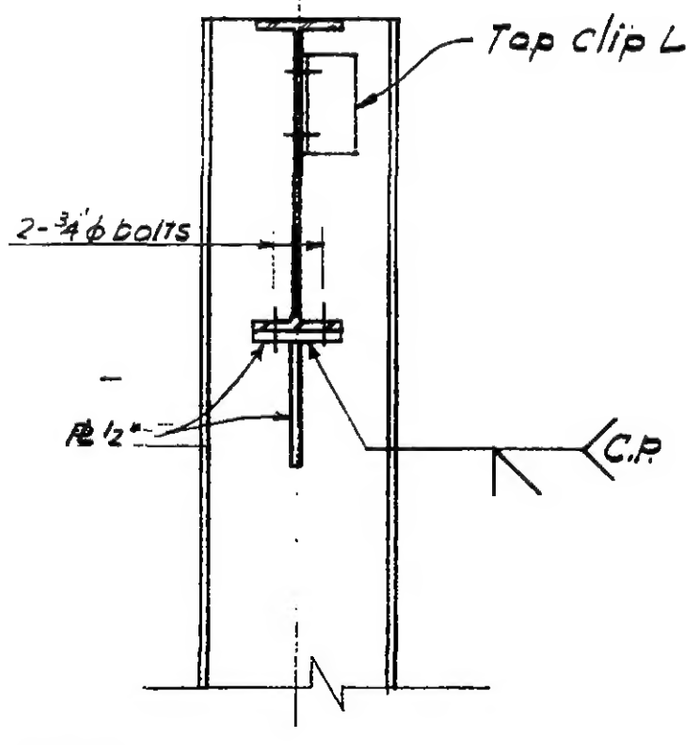

Section b-b

LICENSED PROFESSIONAL ENGINEER LESLIE E. ROBERTSON No. 34360 UNIVERSITY OF THE STATE OF NEW YORK

6-AB2-3.2

SKILLING - HELLE - CHRISTIANSEN - ROBERTSON Structural & Civil Engineers

PROJECT THE WORLD TRADE CENTER | TITLE CONNECTION DETAIL 103A | DATE 3-14-67

REVISIONS

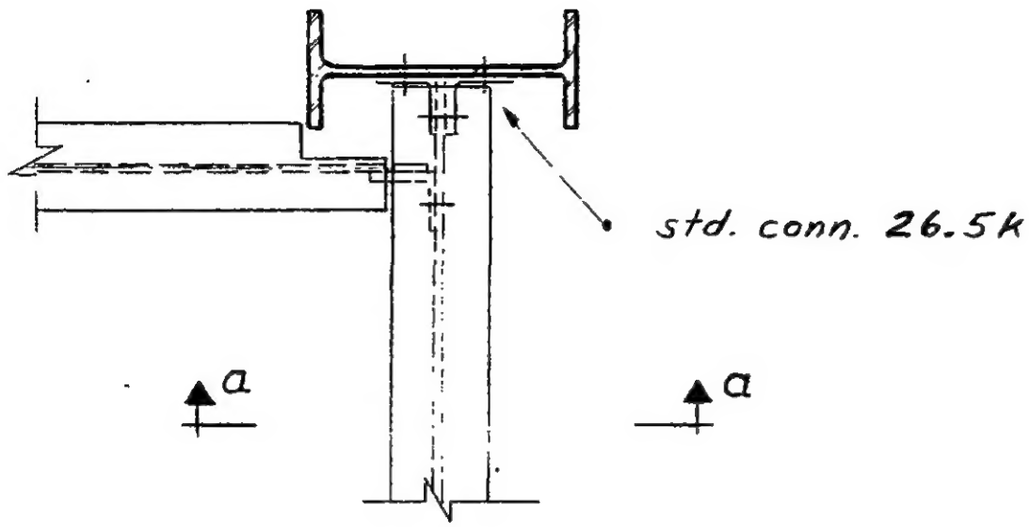

Plan

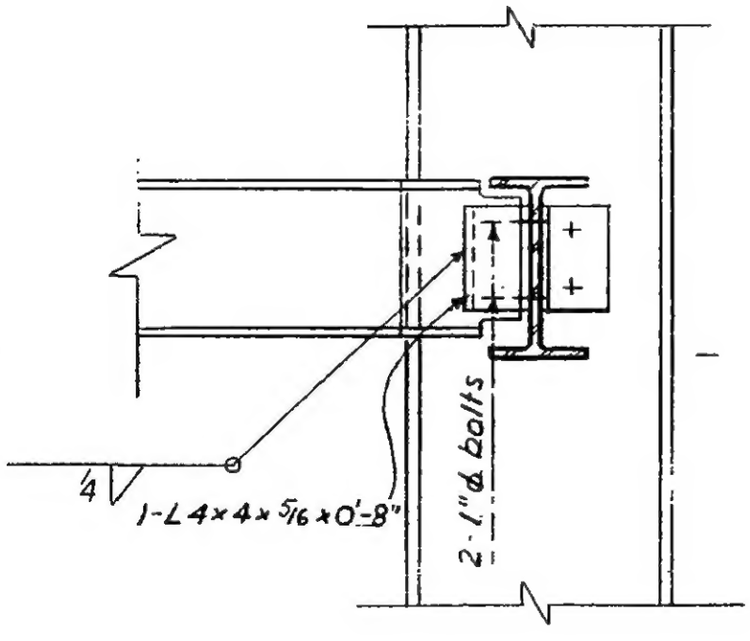

Section a-a

LICENSED PROFESSIONAL ENGINEER
LESLIE E. ROBERTSON
No. 34360
UNIVERSITY OF THE STATE OF NEW YORK

6-AB2-4

SKILLING - HELLE - CHRISTIANSEN - ROBERTSON Structural & Civil Engineers

PROJECT THE WORLD TRADE CENTER | TITLE CONNECTION DETAIL 104A | DATE 2-9-68

REVISIONS

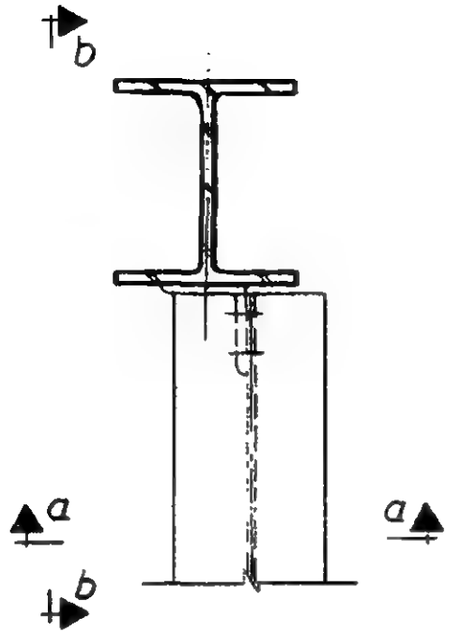

Plan

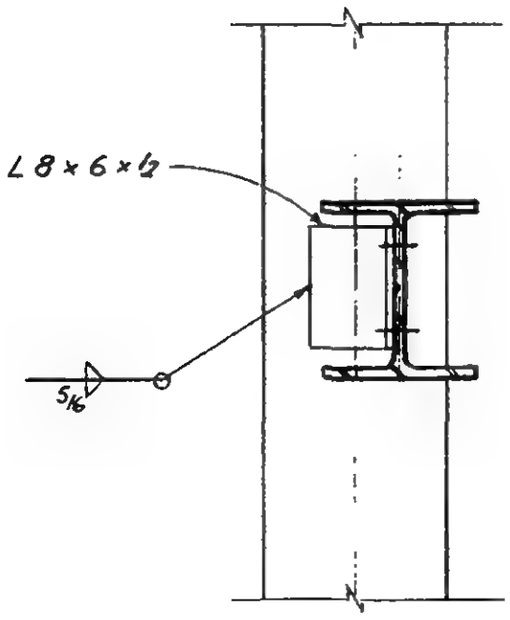

Section a-a

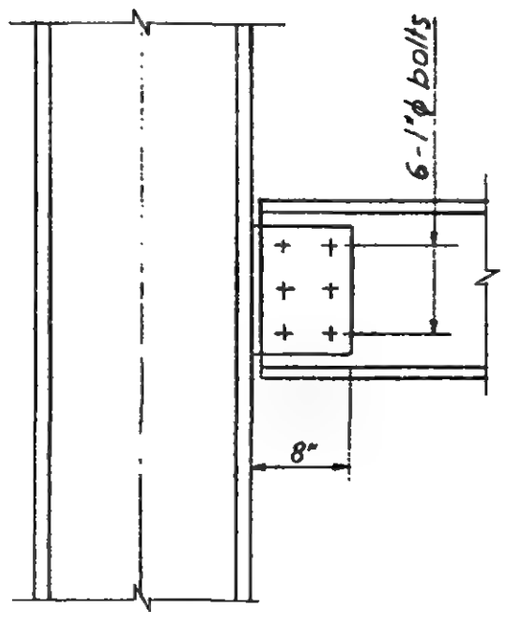

Section b-b

LICENSED PROFESSIONAL ENGINEER
LESLIE E. ROBERTSON
No. 34360
THE STATE OF NEW YORK

6-AB2-5

SKILLING - HELLE - CHRISTIANSEN - ROBERTSON Structural & Civil Engineers

PROJECT THE WORLD TRADE CENTER | TITLE CONNECTION DETAIL 105 N | DATE 5-1-67

REVISIONS

9-18-67

10-2-67

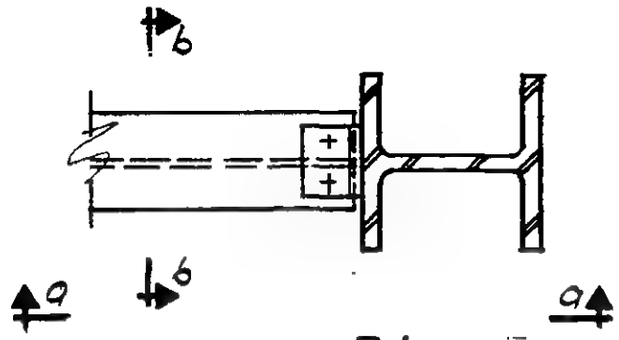

Plan

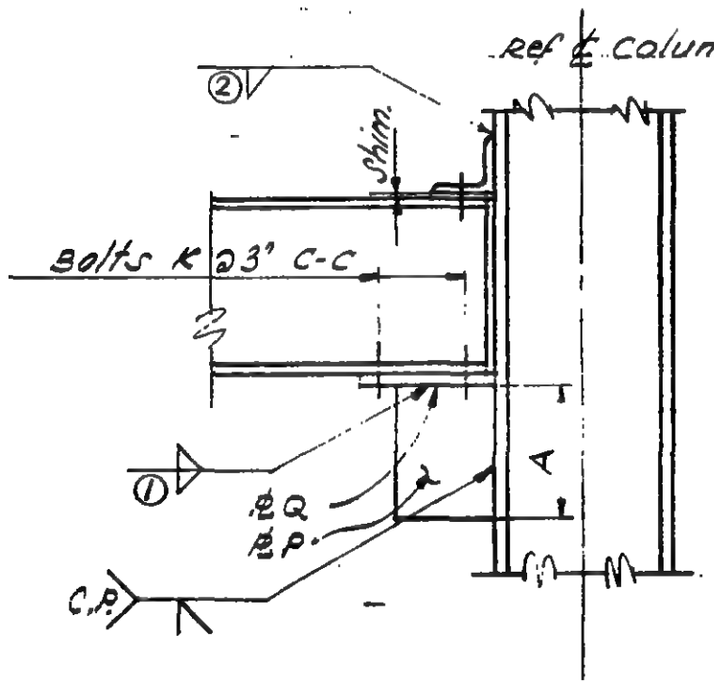

Section a-a

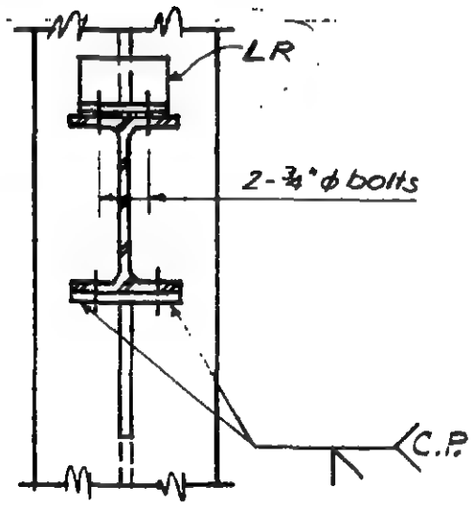

Section b-b

PROFESSIONAL ENGINEER
NO. 34360
STATE OF NEW YORK

G-AB2-7

WORTHINGTON, SKILLING, HELLE & JACKSON — Civil & Structural Engineers

PROJECT: THE WORLD TRADE CENTER | TITLE: CONNECTION DETAIL 105 B, E, G, I, J | DATE: 7-28-67

REVISIONS

9-18-67

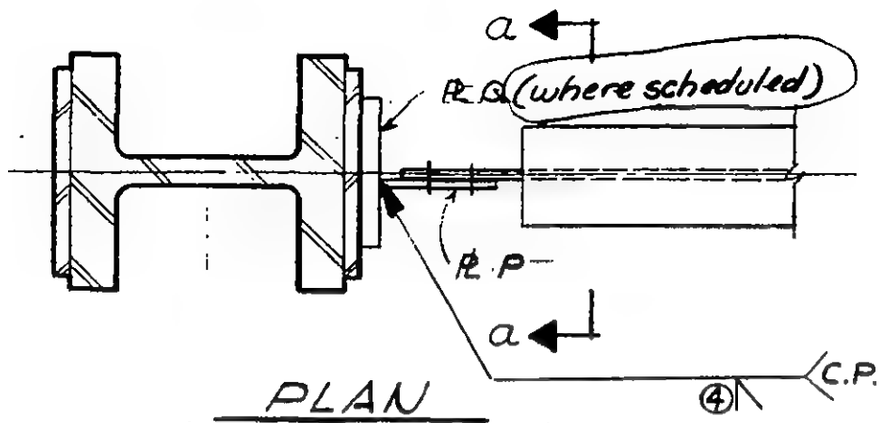

PLAN
col. with cover plate

Note:
See framing plans for relationship of beam ℄ & col. ℄.

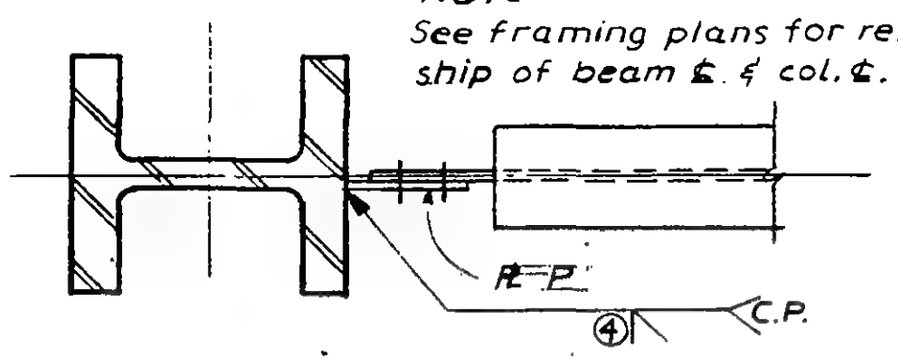

PLAN
if col. has no cover plate

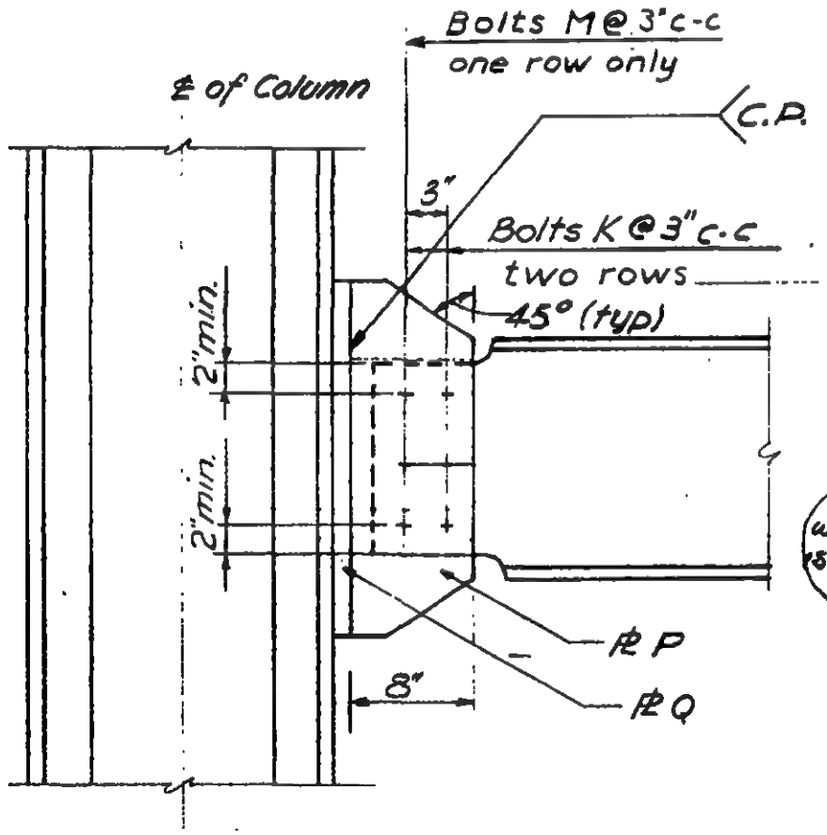

ELEVATION

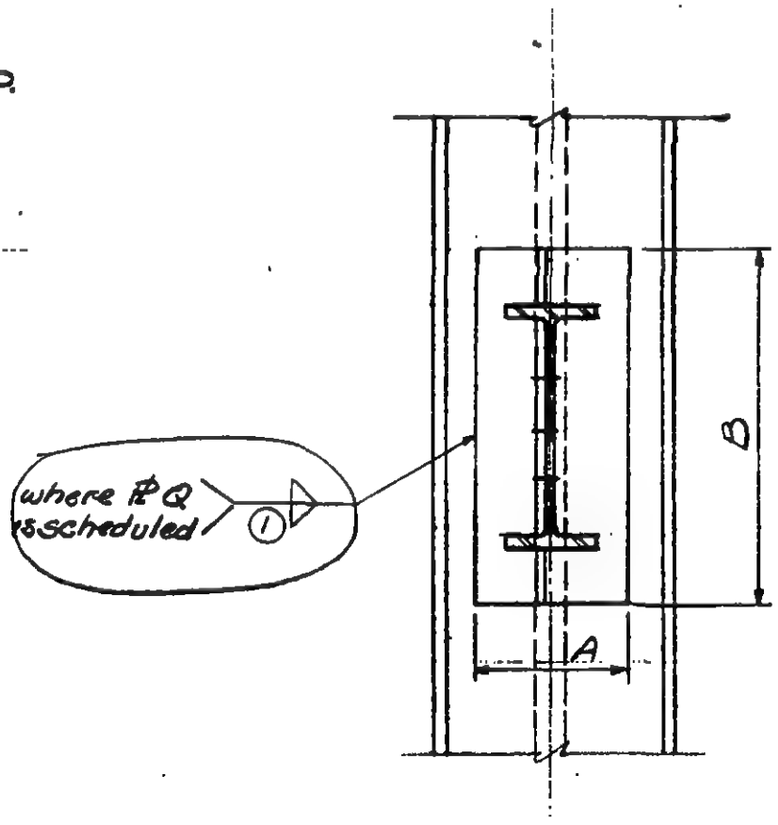

SECTION a-a

LICENSED PROFESSIONAL ENGINEER
LESLIE E. ROBERTSON
No. 34360
LICENSED BY THE STATE OF NEW YORK

6-AB2-71

WORTHINGTON, SKILLING, HELLE & JACKSON — Civil & Structural Engineers

PROJECT THE WORLD TRADE CENTER | TITLE CONNECTION DETAIL 105 C,D,F,K,M) | DATE 1-28-67

REVISIONS
9-15-67

6-AB2-7.4 for Schedule 105 C, D & F
6-AB2-7.5 for Schedule 105 K & M

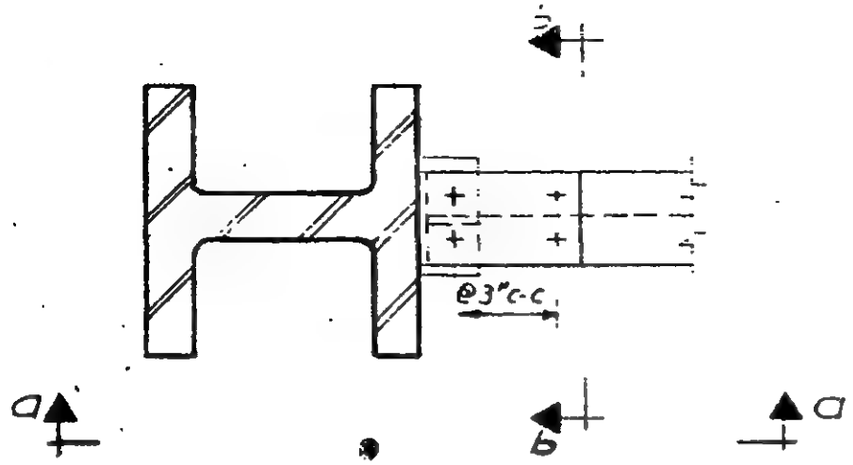

Plan

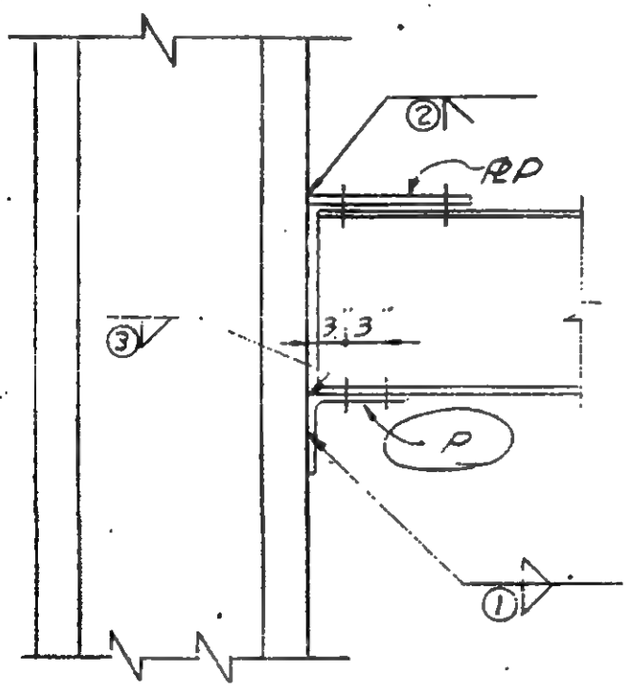

Section a-a

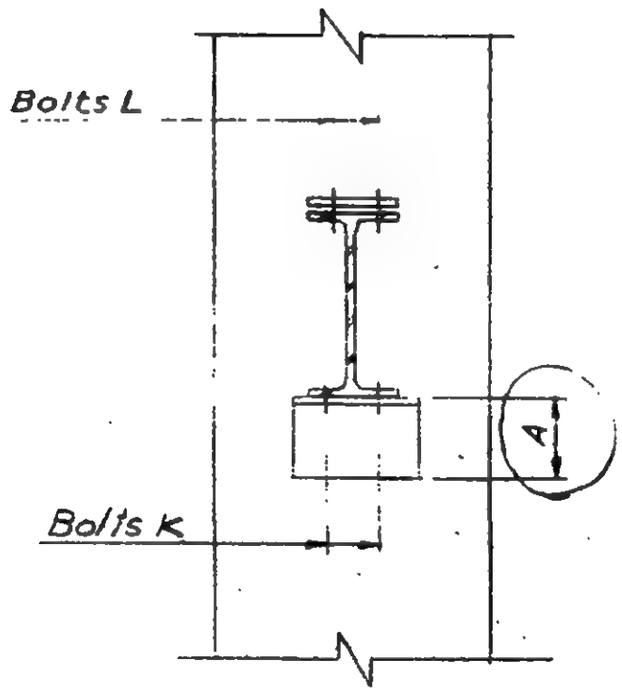

Section b-b

6-AB2-7.2

WORTHINGTON, SKILLING, HELLE & JACKSON — Civil & Structural Engineers

PROJECT: THE WORLD TRADE CENTER | TITLE: CONNECTION DETAIL 105 C D,F,K,M | DATE: 7-28-67

REVISIONS
9-15-67
9-18-67
12-13-67
12-21-67

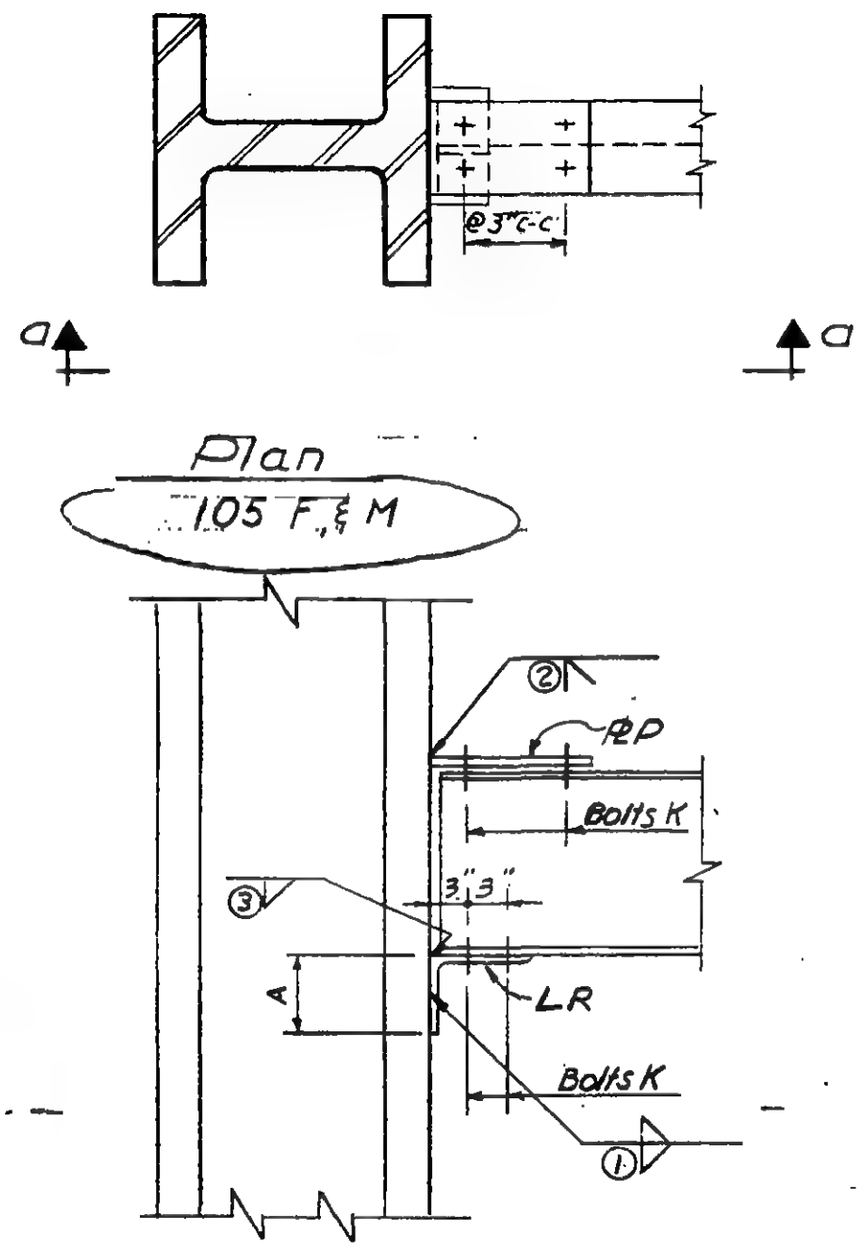

Section a-a

6-AB2-7.4 for Schedule 105 C, D & F
6-AB2-7.5 for Schedule 105 K & M

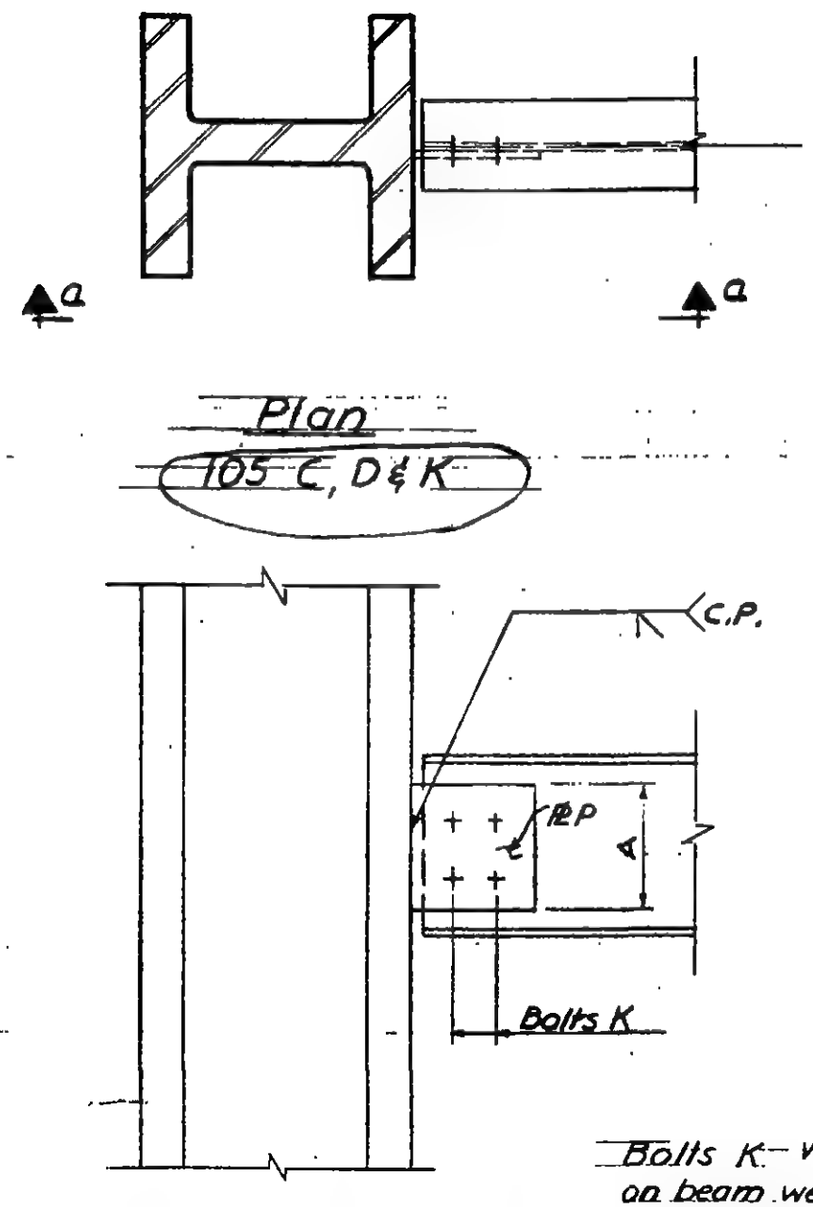

Bolts K w/washers on beam web.

Section a-a

Note:
Use alt. for all scheduled Details, floor 10 and above.

6-AB2-[illegible]

LICENSED PROFESSIONAL ENGINEER
LESLIE E. ROBERTSON
No. 34360
UNIVERSITY OF THE STATE OF NEW YORK

WORTHINGTON, SKILLING, HELLE & JACKSON — Civil & Structural Engineers

PROJECT THE WORLD TRADE CENTER | TITLE CONNECTION DETAIL 105 A, H (L) | DATE 7-5-67

REVISIONS
7-28-67
9-15-67
9-18-67

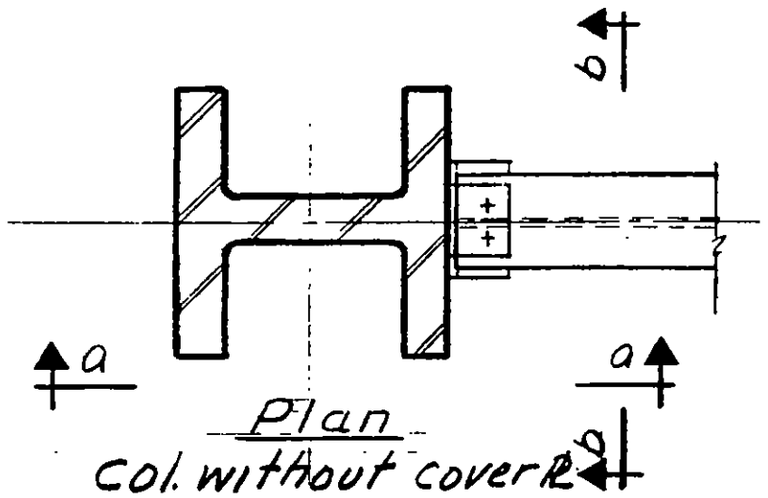

Plan
Col. without cover Pl

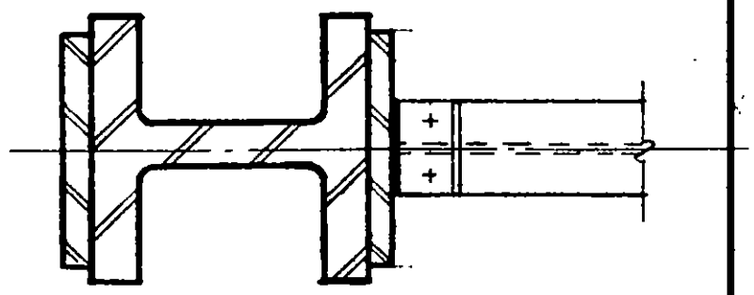

Plan
Col. with cover Pl

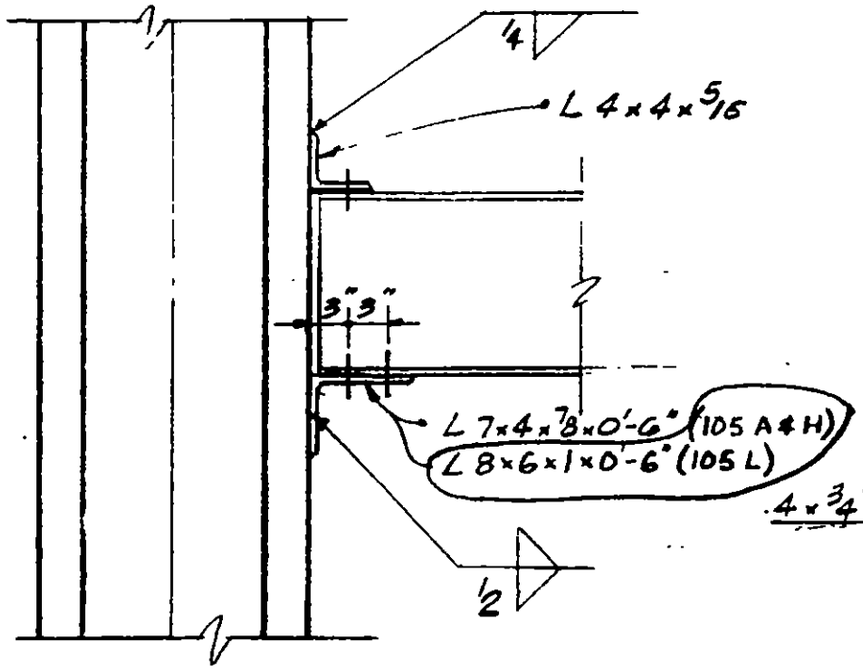

Section a-a

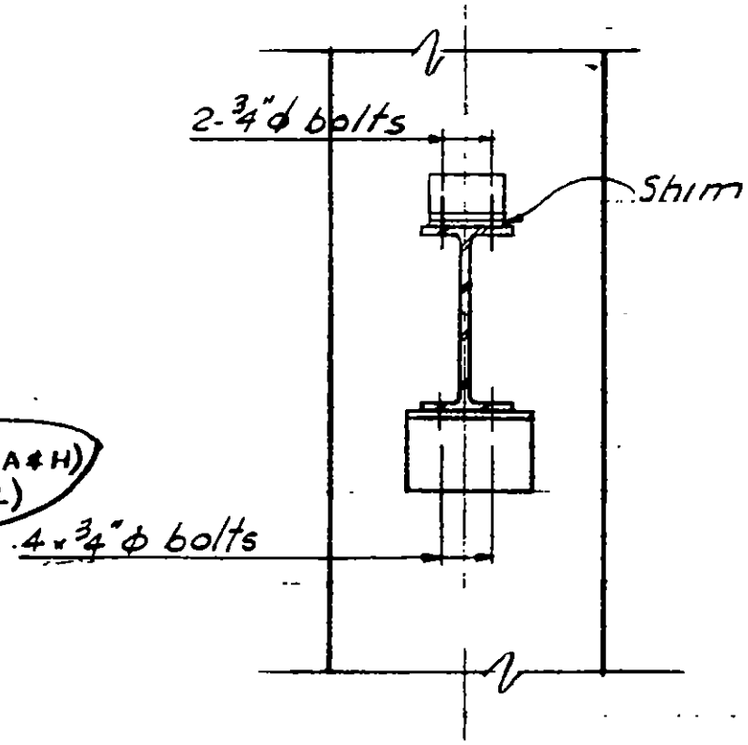

Section b-b

LESLIE E. ROBERTSON No. 34360 STATE OF NEW YORK

SKILLING - HELLE - CHRISTIANSEN - ROBERTSON Structural & Civil Engineers

PROJECT THE WORLD TRADE CENTER | TITLE SCHEDULE FOR DETAIL [illegible] | DATE 7-[illegible]

REVISIONS

3-15-67
9-18-67
11-10-67

Ref. Dwgs.	6-AB2-7.1	6-AB2-7.2	6-AB2-7.2	6-AB2-7.1	6-AB2-7.2	6-AB2-7.1
	105E	105C	105D	105E	105F	105G
PLATES						
P	1/2"	3/8"	1/2"	1/2"	1/2"	3/8"
Q	1 1/8"	—	—	—	—	—
ANGLE						
R	—	7 x 4 x [illegible]	7 x 4" x 7/8" x [illegible]	—	8" x 6" x 1 [illegible]	—
DIMENSIONS						
A	0'-10	0'-4"	0'-4"	—	0'-6	—
B	1'-0"	—	—	1'-10"	—	1'-10"
BOLTS						
	6-1 ø	4-3/4" ø	4-7/8" ø	—	4-7/8" ø	—
—	—	4-3/4" ø	4-7/8" ø	—	4-7/8" ø	—
	—	—	—	7-1 1/8" ø	—	7-[illegible] ø
WELD						
(1)	[illegible]	[illegible]	[illegible]	—	1/2	—
(2)	—	[illegible]	[illegible]	—	C.P.	—
(3)		[illegible]	[illegible]		1/2	—
(4)	C.P.	—	—	[illegible]	—	[illegible]

3-AB2-7.4

SKILLING - HELLE - CHRISTIANSEN - ROBERTSON Structural & Civil Engineers

PROJECT THE WORLD TRADE CENTER | TITLE SCHEDULE FOR DETAIL 105 B-G | DATE 7-28-67

REVISIONS
9-15-67
9-18-67
11-10-67
12-13-67

Ref. Dwgs.	6-AB2-7.1	6-AB2-7.2	6-AB2-7.2	6-AB2-7.1	6-AB2-7.2	6-AB2-7.1
	105B	105C	105D	105E	105F	105G
PLATES						
P	1/2"	5/8"	5/8"	1/2"	1/2"	3/8"
Q	1 1/8"	—	—	—	—	—
ANGLE						
R	—	—	—	—	8"x6"x1"x0'-6"	—
DIMENSIONS						
A	0'-10"	0'-6 1/2"	0'-6 1/2"	—	0'-6"	—
B	2'-0"	—	—	1'-10"	—	1'-10"
BOLTS						
K	6-1"φ	4-1"φ	4-1"φ	—	4-7/8"φ	—
L	—	—	—	—	4-7/8"φ	—
M	—	—	—	7-1 1/8"φ	—	7-1"φ
WELDS						
1	1/2	—	—	—	1/2	—
2	—	—	—	—	C.P.	—
3	—	—	—	—	1/2	—
4	C.P.	—	—	C.P.	—	C.P.

Note: Use Alt. for all scheduled Details [illegible] above

6-AB2-[illegible]

LICENSED PROFESSIONAL ENGINEER LESLIE E. ROBERTSON No. 34360 THE STATE UNIVERSITY OF THE STATE OF NEW YORK

SKILLING - HELLE - CHRISTIANSEN - ROBERTSON Structural & Civil Engineers

PROJECT THE WORLD TRADE CENTER | TITLE SCHEDULE FOR DETAIL 105 [illegible] | DATE 7-5-67

REVISIONS
3-15-67
9-18-67
10-2-67
11-10-67

Ref. Dwgs.	6-AB2-7.1	6-AB2-7.1	6-AB2-7.2	6-AB2-7.2	6-AB2-7	
	105I	105J	105K	105M	105N	
PLATES						
P	5/8"	3/8"	1/2"	1"	6" x 5/8"	
Q	3/4"	1/2	—	—	5/8"	
ANGLE						
R	—	—	[illegible]	8x6x1x0'-6"	4 x 3 1/2 x 5/16 x 0'-6"	
DIMENSIONS						
A	0'-0"	0'-0	[illegible]	0'-6"	1'-2"	
B	1'-3"	1'-0"	—		—	
BOLTS						
K	6 - [illegible]	—	4 - 1/4 ϕ	4 - 3/4" ϕ	4 - 3/4" ϕ	
L	—	—	2 - 7/8 ϕ	8 - 3/4" ϕ	—	
M	—	1 - 3" ϕ	—	—		
WELDS						
(1)	3/8		3/8	1/4	5/16	
(2)	—	—	—	C.J.	1/4	
(3)	—			1/2		
4	[illegible]	—	—	—		

6-AB2-7.5

SKILLING - HELLE - CHRISTIANSEN - ROBERTSON Structural & Civil Engineers

PROJECT THE WORLD TRADE CENTER | TITLE SCHEDULE FOR DETAIL '05 I, J, K, M, N | DATE 7-28-67

REVISIONS
9-15-67
9-18-67
10-2-67
11-10-67
12-21-67

Ref. Dwgs.	6-AB2-7.1	6-AB2-7.1	6-AB2-7.2	6-AB2-7.2	6-AB2-7
	105I	105J	105K Alt.	105M	105N
PLATES					
P	3/8"	3/8"	5/8"	1"	6" x 5/8"
Q	3/4"	3/4"	—	—	5/8"
ANGLE					
R	—	—	—	8x6x1x0'-6"	4 x 3½ x 5/16 x 0'-6"
DIMENSIONS					
A	0'-10"	0'-10"	0'-9½"	0'-6"	1'-2"
B	1'-8"	1'-10"	—	—	—
BOLTS					
K	6 - 3/4" ϕ	—	6 - 7/8" ϕ	4 - 3/4" ϕ	4 - 3/4" ϕ
L	—	—	—	8 - 3/4" ϕ	—
M	—	7 - 7/8" ϕ	—	—	—
WELDS					
①	3/8	3/8	—	3/4	5/16
②	—	—	—	C.P.	4
③	—	—	—	1/2	—
④	C.P.	C.P.	—	—	—

LICENSED PROFESSIONAL ENGINEER
LESLIE E. ROBERTSON
No. 34360
UNIVERSITY OF THE STATE OF NEW YORK

SKILLING - HELLE - CHRISTIANSEN - ROBERTSON Structural & Civil Engineers

PROJECT THE WORLD TRADE CENTER | TITLE CONNECTION DETAIL 105P | DATE 10-5-67

REVISIONS

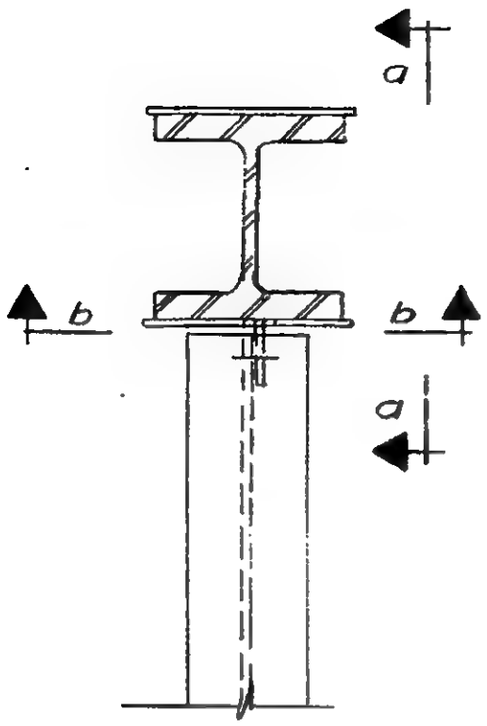

Plan

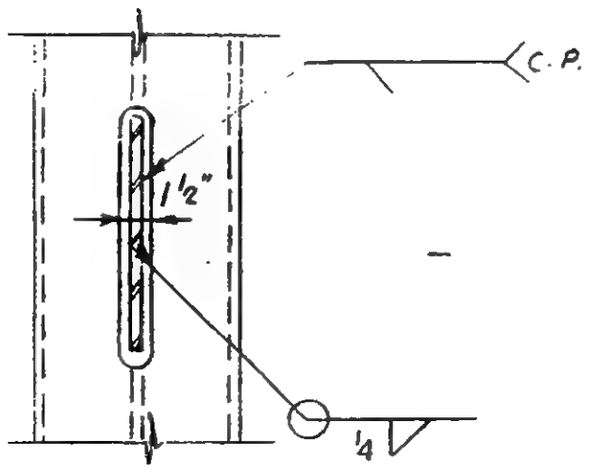

Section b-b

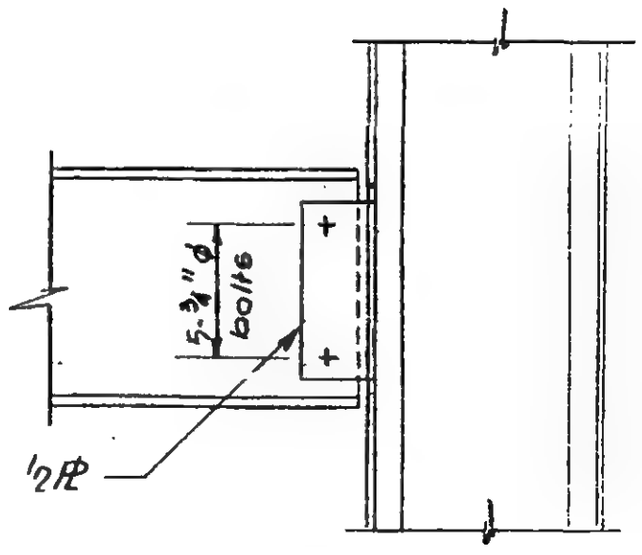

Section a-a

LICENSED PROFESSIONAL ENGINEER
LESLIE E. ROBERTSON
No. 34360
UNIVERSITY OF THE STATE OF NEW YORK

G-AB2-7.6

WORTHINGTON, SKILLING, HELLE & JACKSON — Civil & Structural Engineers

PROJECT: THE WORLD TRADE CENTER

TITLE: CONNECTION DETAIL 106 A,B,D,E,F,G,H,I,J,M,N 106 P,Q & R

DATE: 5-1-67

REVISIONS

7-28-67
9-15-67
10-2-67
10-31-67

Detail 106 R : See G-AB5-97 for bracing elevation.
Detail 106 I : See G-AB5-97 or G-AB5-98 for bracing elevation
Detail 106 N : See G-AB5-97, G-AB5-98 or G-AB5-100 for bracing elevation
Detail 106 M,J: See G-AB5-100 for bracing elevation
Detail 106 Q : See G-AB5-101 for bracing elevation

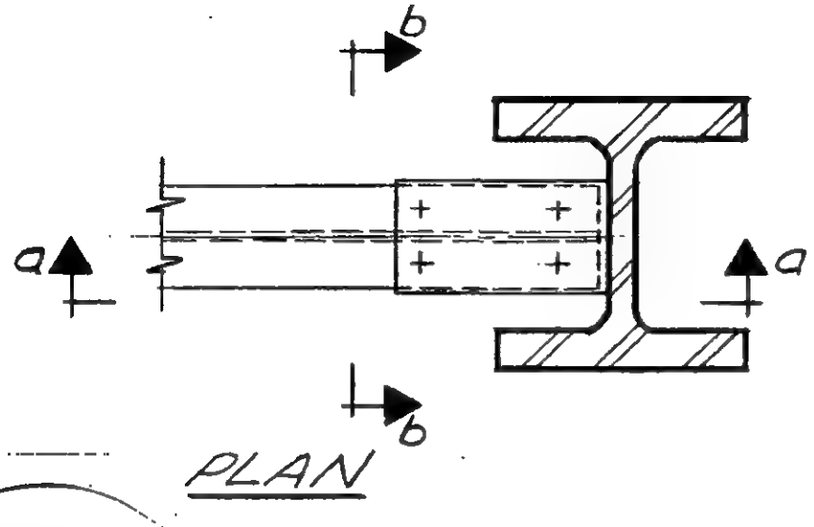

PLAN

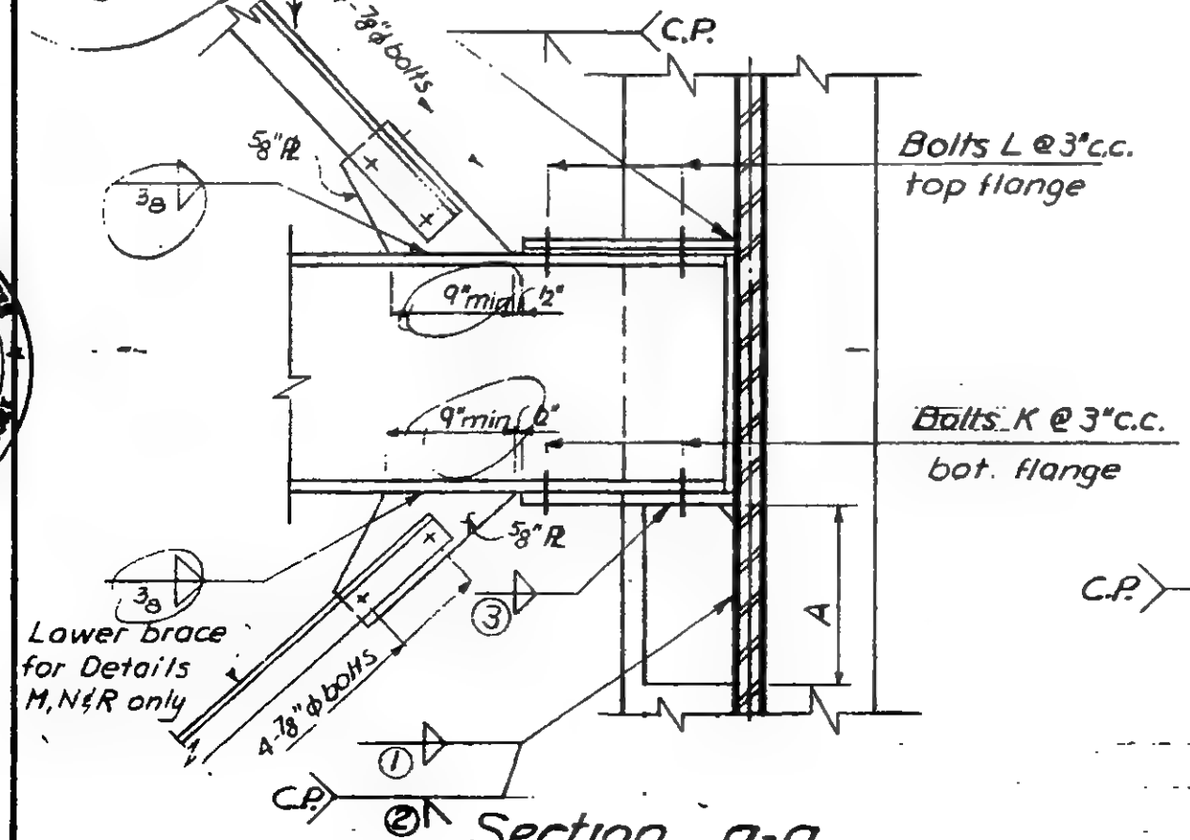

Section a-a

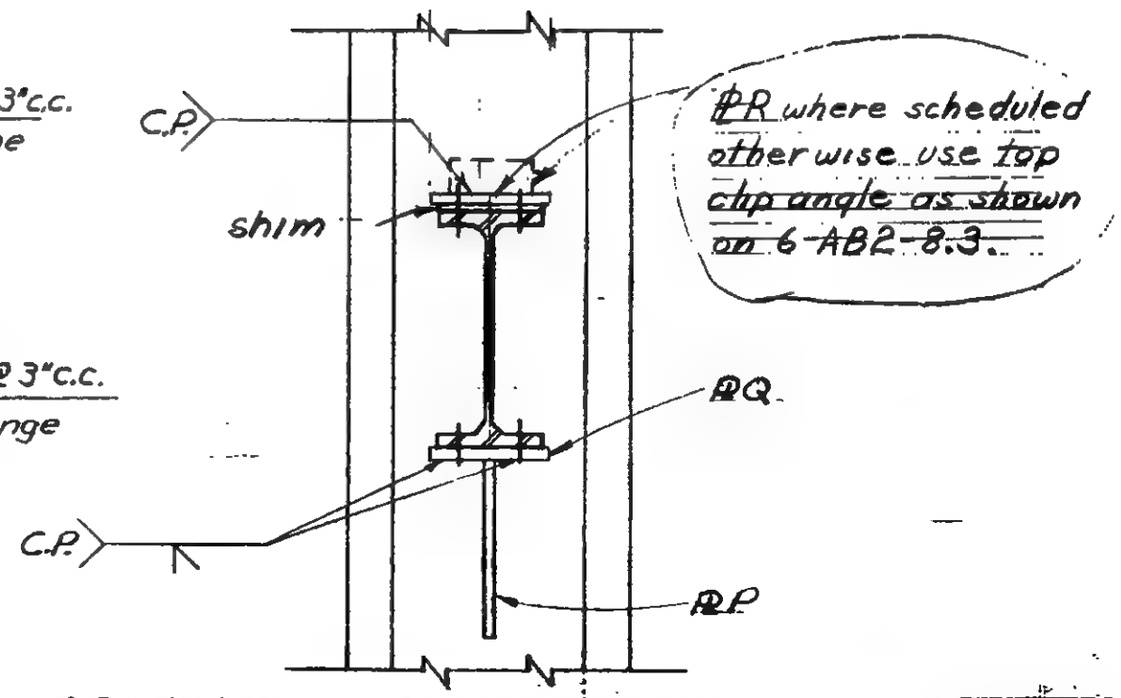

Section b-b

G-AB2-8

LICENSED PROFESSIONAL ENGINEER — LESLIE E. ROBERTSON — No. 34360 — UNIVERSITY OF THE STATE OF NEW YORK

SKILLING - HELLE - CHRISTIANSEN - ROBERTSON — Structural & Civil Engineers

PROJECT: THE WORLD TRADE CENTER | TITLE: SCHEDULE FOR DETAIL 106A, B, D, E, F, G | DATE: 7-28-67

REVISIONS
3-15-67
11-10-67

	106A	106B	106D	106E	(106F)	106G
PLATES						
P	6"x5/8"	6"x5/8"	5"x1/2"	5"x7/16"	5"x1/2"	7"x5/8"
Q	7 1/2"x5/8"	7 1/2"x5/8"	1/2"	7/16	1/2"	5/8"
R	7 1/2"x5/8"	—	—	—	—	—
DIMENSIONS						
A	1'-0"	1'-0"	0'-10"	0'-11"	0'-10"	1'-2"
BOLTS						
K	4-7/8"ϕ	4-3/4"ϕ	4-3/4"ϕ	4-3/4"ϕ	6-3/4"ϕ	4-3/4"ϕ
L	4-7/8"ϕ	—	—	—	—	—
WELDS						
(1)	—	—	3/9	5/16	3/8	—
(2)	C.P.	C.P.	—	—	—	C.P.
(3)	5/16	5/16	5/16	5/16	5/16	5/16

LICENSED PROFESSIONAL ENGINEER LESLIE E. ROPER

6-ABZ-B.1

SKILLING - HELLE - CHRISTIANSEN - ROBERTSON Structural & Civil Engineers

PROJECT THE WORLD TRADE CENTER | TITLE SCHEDULE FOR DETAIL 106 H, I, J, M, N, P | DATE 10-2-67

REVISIONS

	106 H	106 I	106 J	106 M	106 N	106 P
PLATES						
P	9" x 7/8"	9" x 7/8"	7" x 5/8"	5" x 3/4"	5" x 3/4"	5" x 5/8
Q	7/8"	7/8"	5/8"	3/4"	3/4"	5/8
R	3/8"	3/8"	3/8"	1/2"	1/2"	—
DIMENSIONS						
A	1'-5"	1'-4"	1'-1"	1'-2"	1'-2"	1'-2"
BOLTS						
K	4 - 3/4" ϕ	4 - 3/4" ϕ	4 - 3/4" ϕ	4 - 3/4" ϕ	4 - 3/4" ϕ	4 - 3/4" ϕ
L	4 - 3/4" ϕ	4 - 3/4" ϕ	4 - 3/4" ϕ	4 - 3/4" ϕ	4 - 3/4" ϕ	—
WELDS						
①	—	—	—	—	—	—
②	C.P.	C.P.	C.P.	C.P.	C.P.	C.P.
③	5/16	5/16	5/16	5/16	5/16	5/16

LICENSED PROFESSIONAL ENGINEER LESLIE E. ROBERTSON N.Y. 34500 STATE OF NEW YORK

6-AB2-8.2

WORTHINGTON, SKILLING, HELLE & JACKSON — Civil & Structural Engineers

PROJECT THE WORLD TRADE CENTER | TITLE CONNECTION DETAIL 106 C, K, L | DATE 7-5-67

REVISIONS

10-5-67
10-31-67

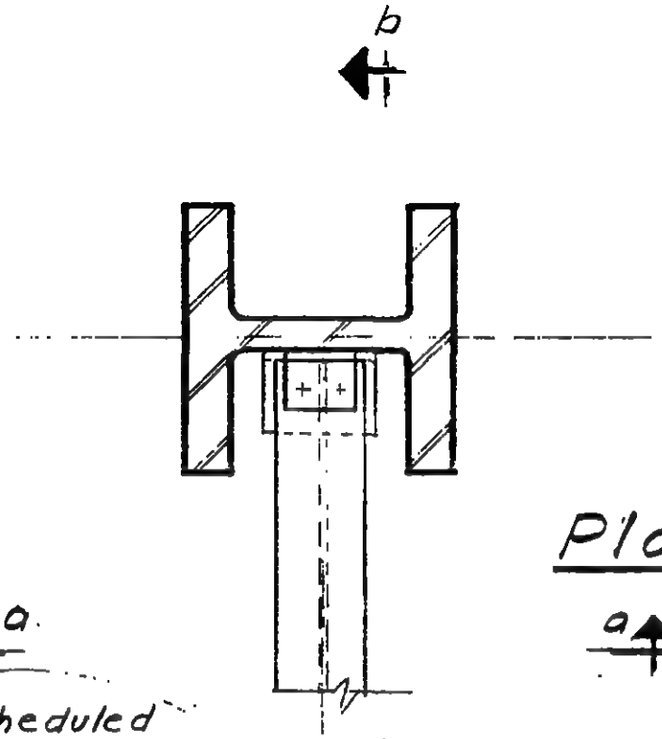

Plan

Note: If beam is scheduled for detail 106 on both ends top clip angle may be bolted to column web or fitted into optional location.

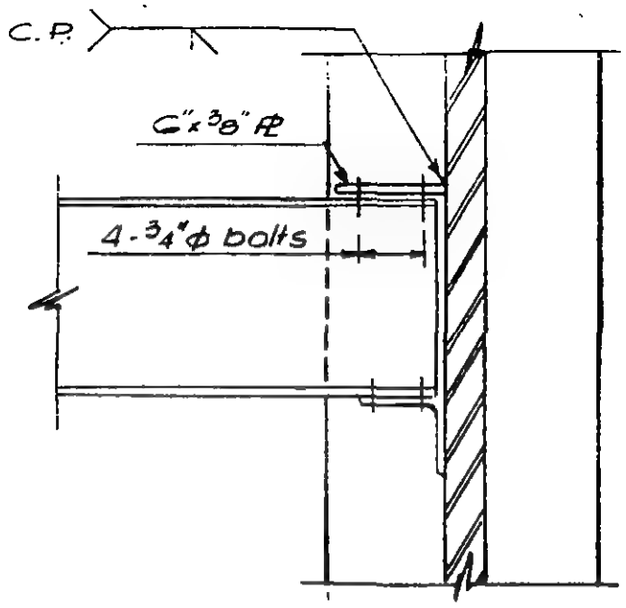

Section b-b
106 L only

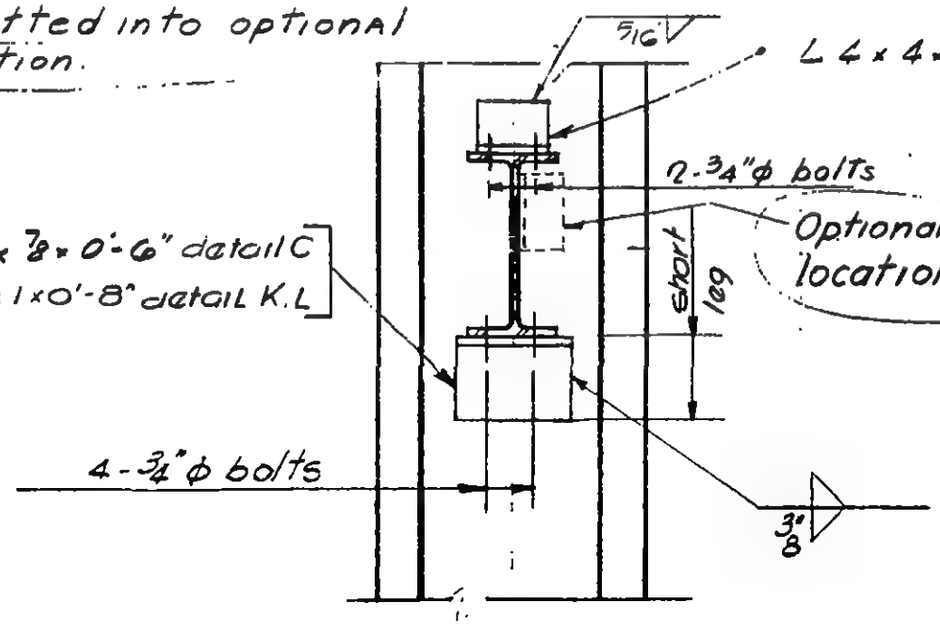

Section a-a

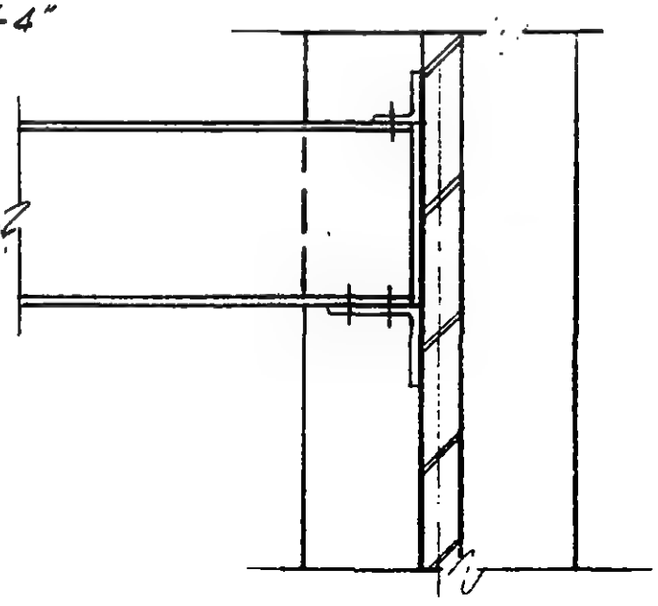

Section b-b

6-AB2-8.3

LESLIE E. ROBERTSON PROFESSIONAL ENGINEER No. 34360 CITY OF THE STATE OF NEW YORK

SKILLING - HELLE - CHRISTIANSEN - ROBERTSON Structural & Civil Engineers

PROJECT THE WORLD TRADE CENTER | TITLE SCHEDULE FOR DETAIL 106 Q.R | DATE 10-2-67

REVISIONS

	106 Q	106 R				
PLATES						
P	5" x ¾"	6" x ⅞"				
Q	¾"	⅞"				
R	½"	½"				
DIMENSIONS						
A	1'-2"	1'-4"				
BOLTS						
K	4 - ¾" ϕ	4 - ¾" ϕ				
L	4 - ¾" ϕ	4 - ¾" ϕ				
WELDS						
①	—	—				
②	C.P.	C.P.				
③	5/16	5/16				

LICENSED PROFESSIONAL ENGINEER LESLIE E. ROBERTSON No. 34360 UNIVERSITY OF THE STATE OF NEW YORK

6-AB2-8.4

SKILLING - HELLE - CHRISTIANSEN - ROBERTSON Structural & Civil Engineers

PROJECT THE WORLD TRADE CENTER | TITLE CONNECTION DETAIL 107A | DATE 2-9-68

REVISIONS

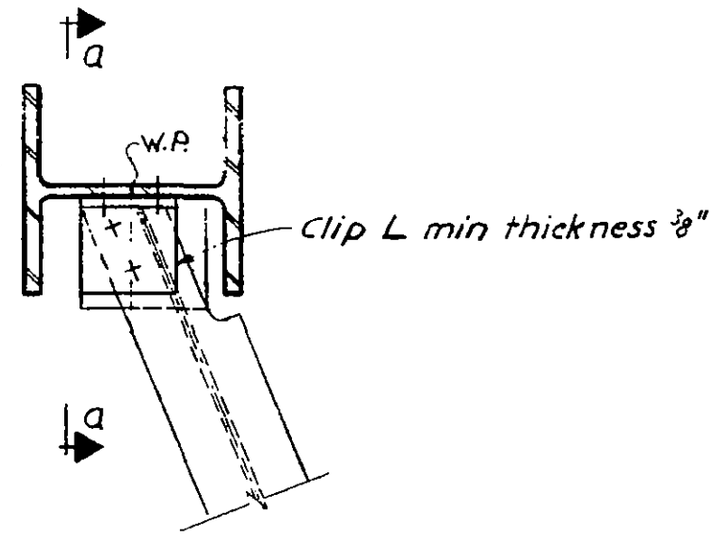

Plan

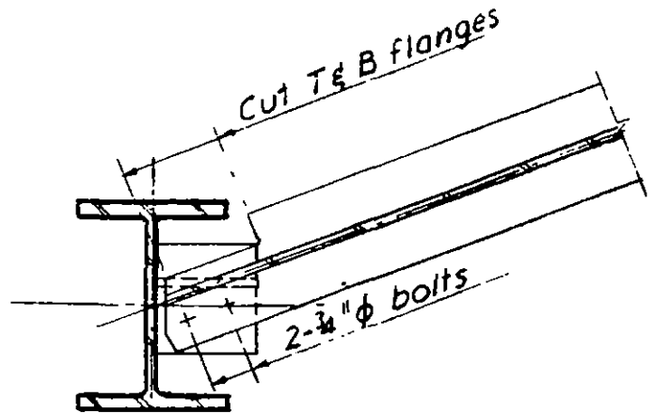

Section b-b

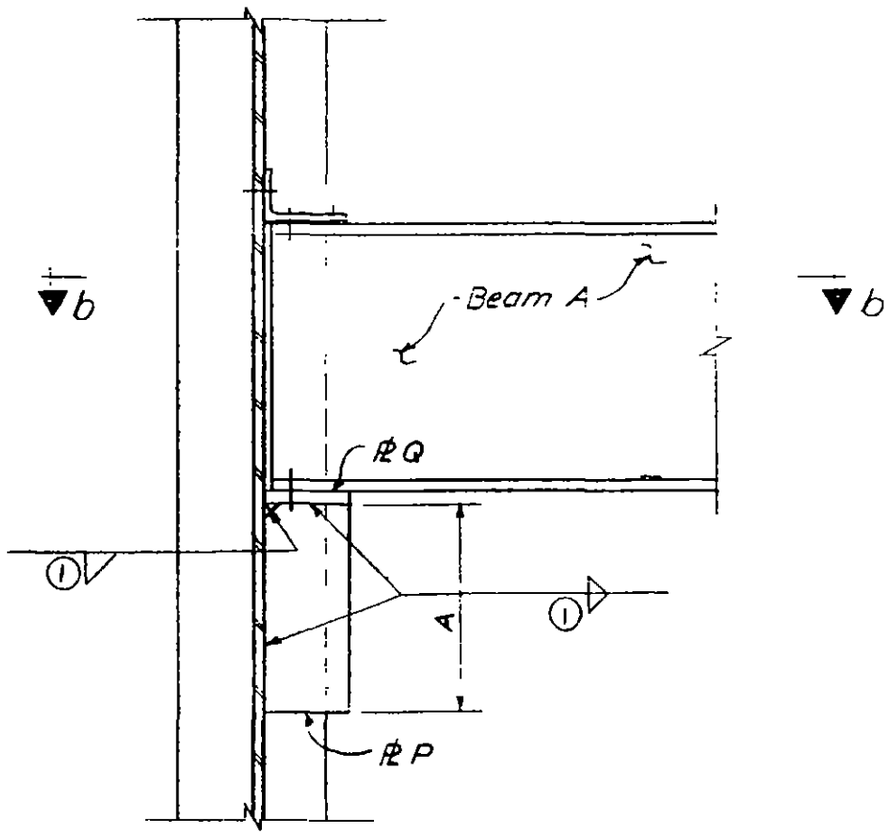

Section a-a

SCHEDULE				
BEAM A	DIM. A	℄ P	℄ Q	WELD ①
10WF	0'-9"	⅝"	¾"	⅜
12WF31, 40	1'-0"	⅝"	¾"	⅜
12 WF 50	1'-1"	⅝"	¾"	⅜
12 WF 53	1'-0"	⅝"	¾"	⅜
12 WF 92	1'-4"	⅝"	¾"	⅜
16 WF 78	1'-2"	⅝"	¾"	⅜
24 WF 84	1'-8"	¾"	1"	⅜

LICENSED PROFESSIONAL ENGINEER LESLIE E. ROBERTSON No. 34360 UNIVERSITY OF THE STATE OF NEW YORK

6-AB2-9

SKILLING - HELLE - CHRISTIANSEN - ROBERTSON Structural & Civil Engineers

PROJECT THE WORLD TRADE CENTER | TITLE CONNECTION DETAIL 108A & B | DATE 2-9-68

REVISIONS

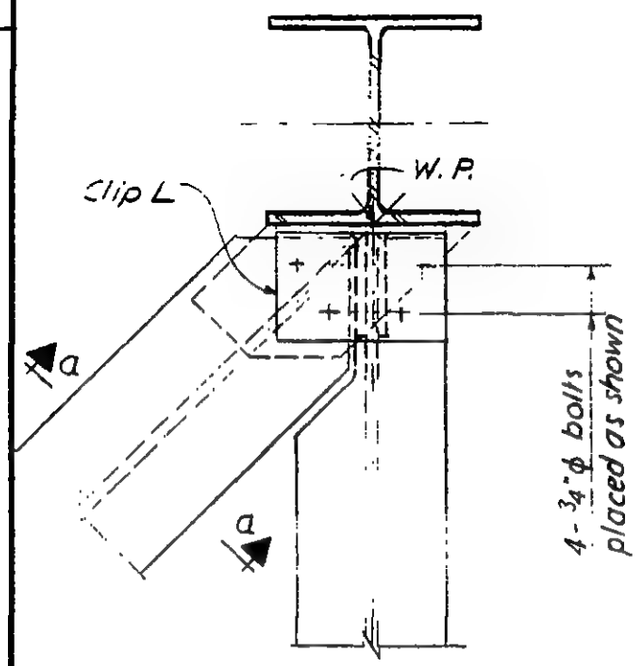

Plan 108A & B

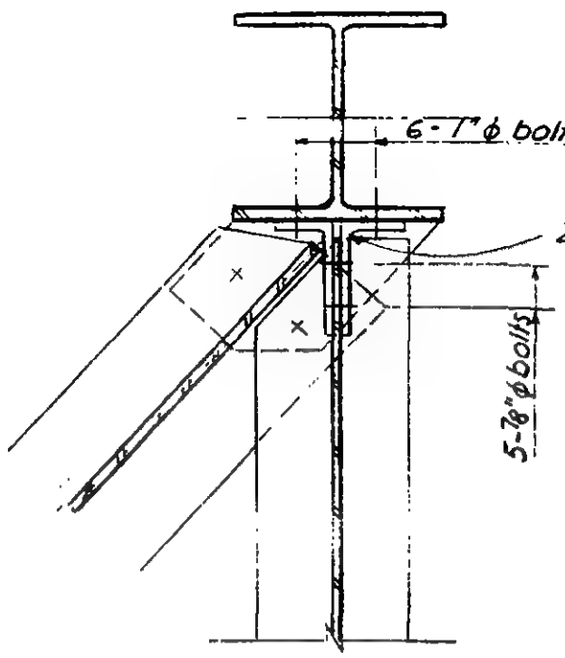

Section b-b

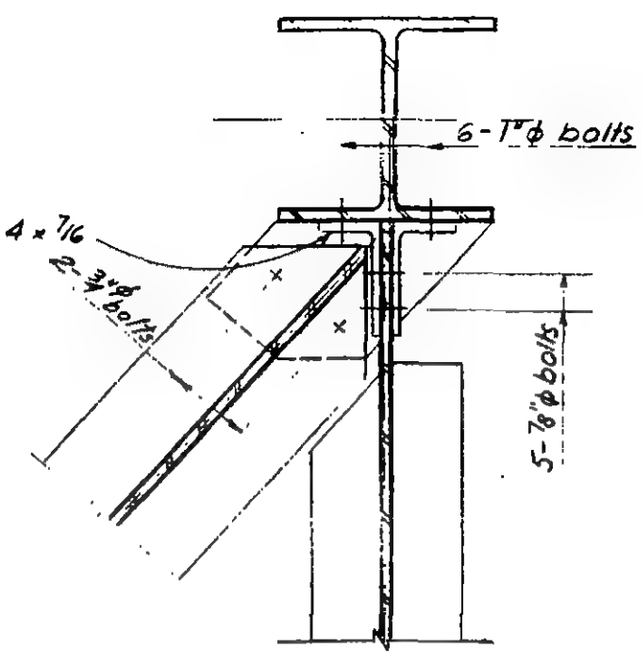

Section c-c

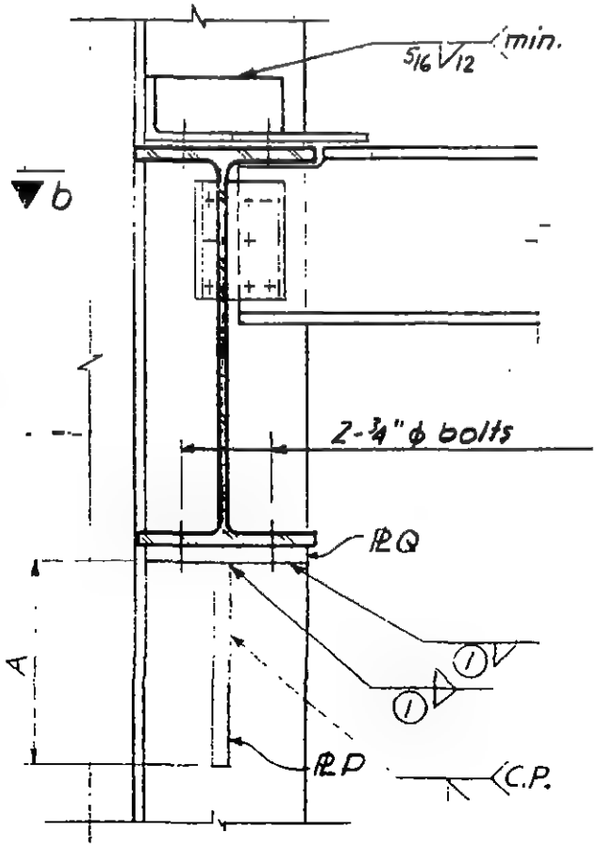

Section a-a
(108A)

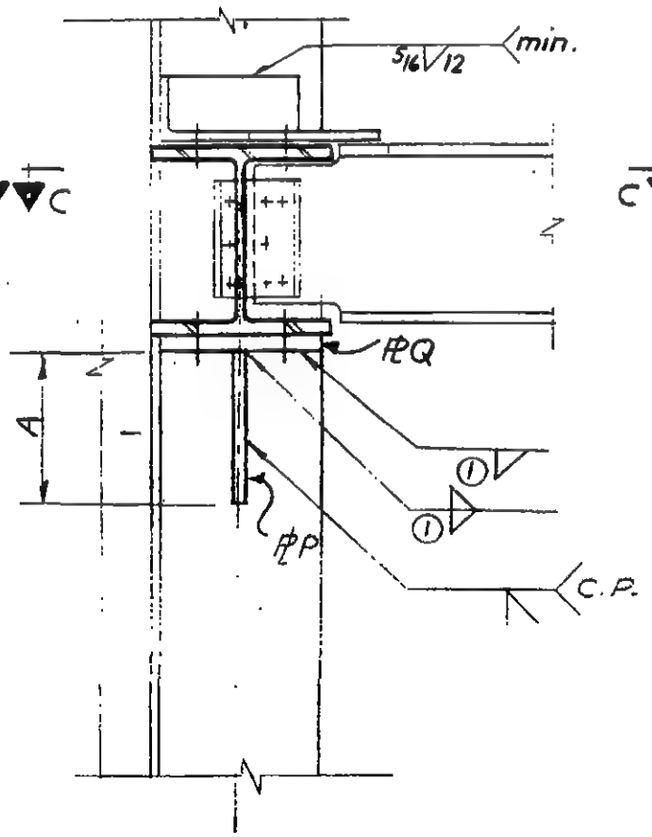

Section a-a
(108B)

SCHEDULE		
	108A	108B
PL P	7½" x 1" x 1'-8"	7½" x ¾" x 1'-2"
PL Q	1"	¾"
DIM. A	1'-8"	1'-2"
WELD ①	½	½

6-AB2-10

LICENSED PROFESSIONAL ENGINEER LESLIE E. ROBERTSON No. 34360 UNIVERSITY OF THE STATE OF NEW YORK

SKILLING - HELLE - CHRISTIANSEN - ROBERTSON Structural & Civil Engineers

PROJECT THE WORLD TRADE CENTER | TITLE CONNECTION DETAIL 109 A | DATE 2-9-68

REVISIONS

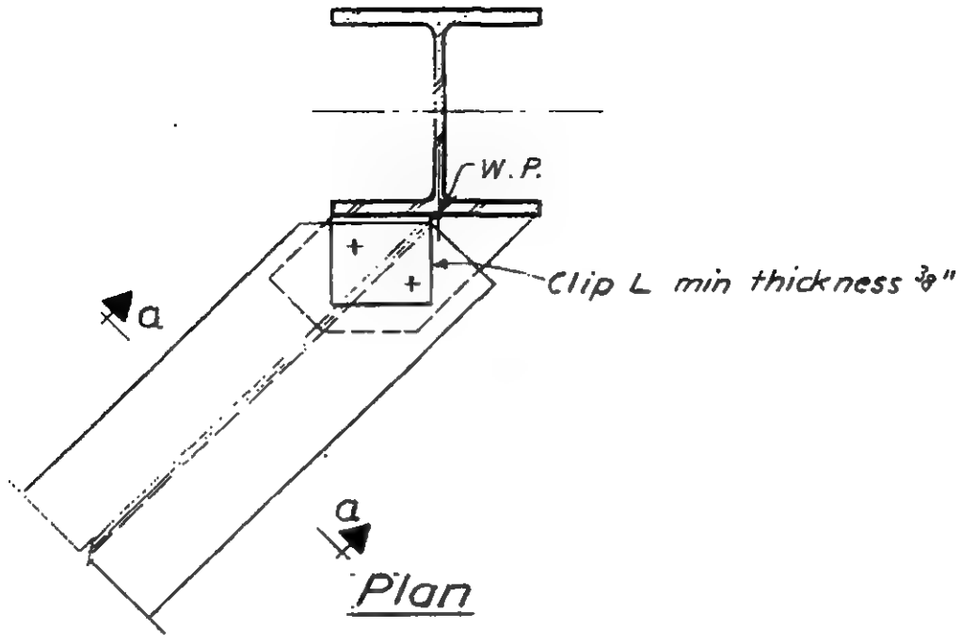

Plan

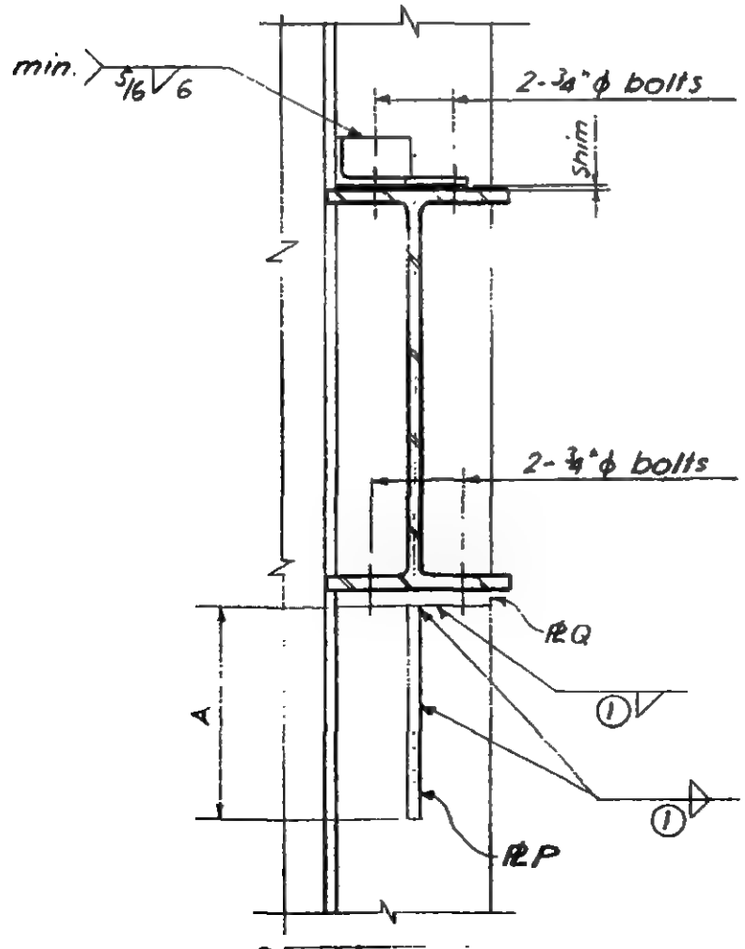

Section a-a

SCHEDULE				
BEAM SIZE	PL P	PL Q	DIM. A	WELD (1)
12 WF	7½" × ¾" × 1'-2"	¾"	1'-2"	½
16 WF	7½" × ¾" × 1'-2"	¾"	1'-3"	½
30 WF	7½" × 1" × 1'-10"	1"	1'-10"	½
33 WF	7½" × 1" × 1'-8"	1"	1'-8"	½

LICENSED PROFESSIONAL ENGINEER
LESLIE E. ROBERTSON
No. 34360
STATE OF NEW YORK

6-AB2-11

SKILLING - HELLE - CHRISTIANSEN - ROBERTSON Structural & Civil Engineers

PROJECT THE WORLD TRADE CENTER | TITLE CONNECTION DETAIL 109 B | DATE 2-9-68

REVISIONS

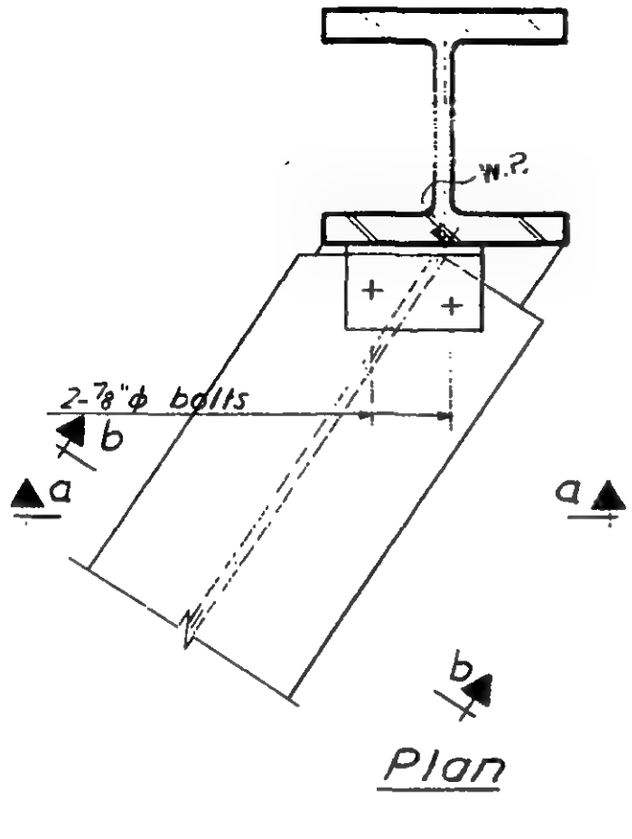

Plan

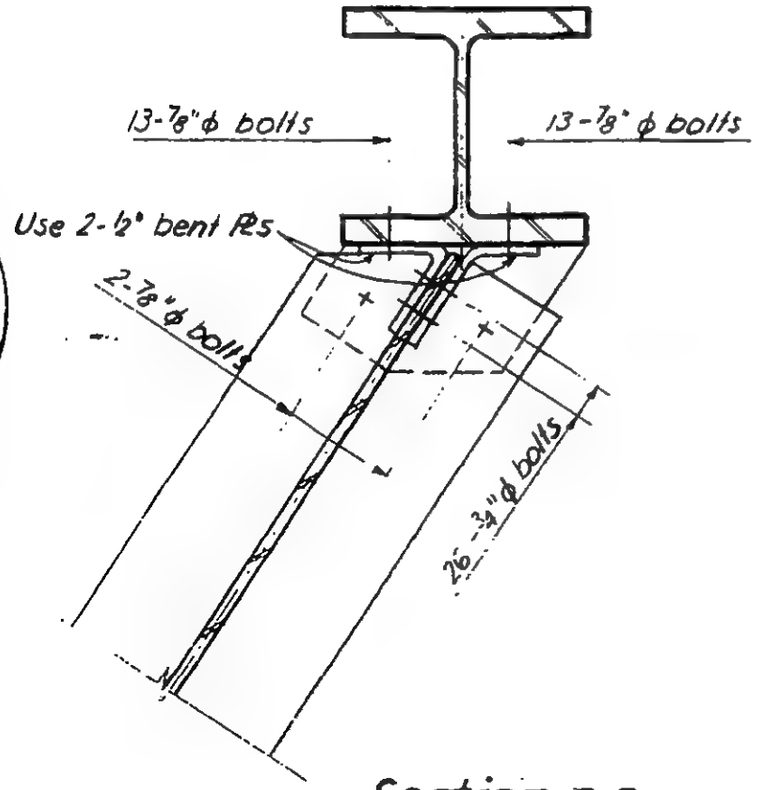

Section c-c

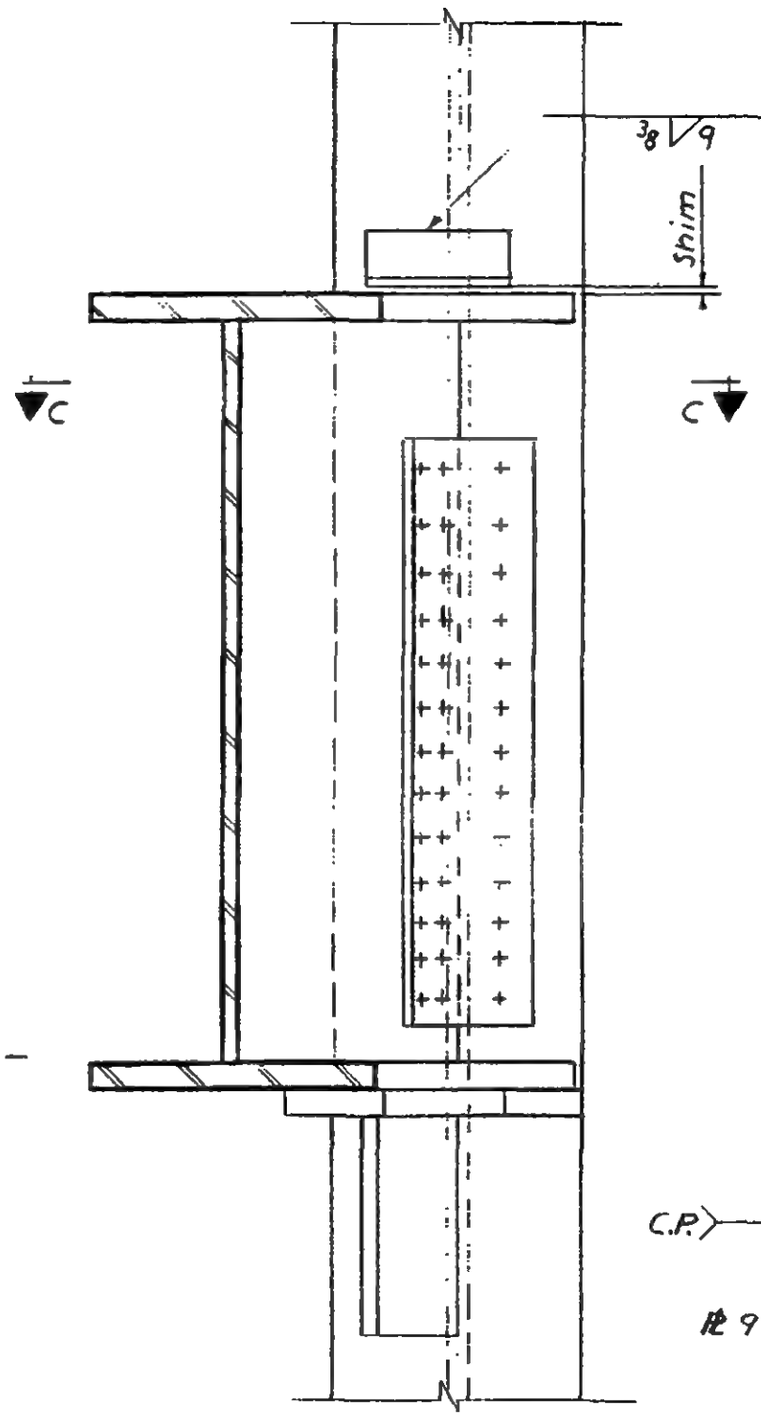

Section a-a

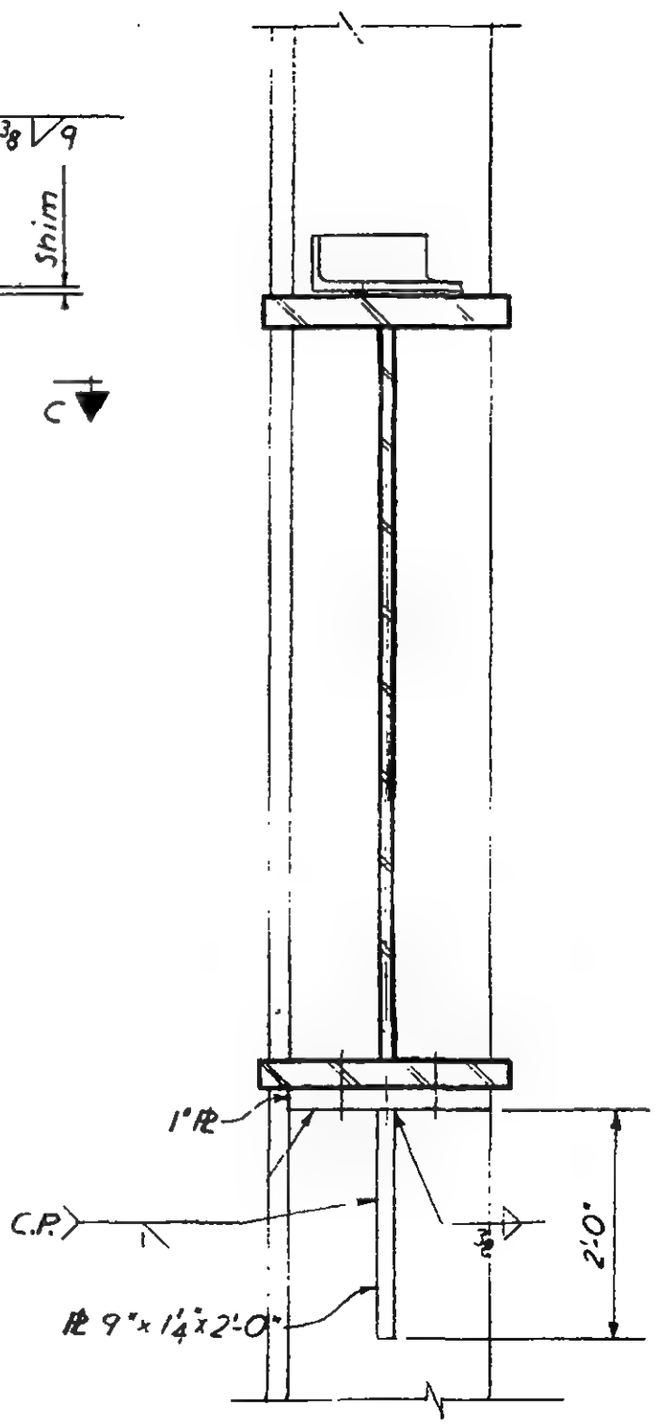

Section b-b

LICENSED PROFESSIONAL ENGINEER
LESLIE E. ROBERTSON
No. 34360
UNIVERSITY OF THE STATE OF NEW YORK

6-AB2-11.1

SKILLING - HELLE - CHRISTIANSEN - ROBERTSON Structural & Civil Engineers

PROJECT THE WORLD TRADE CENTER | TITLE CONNECTION DETAIL 110A, 110B | DATE 2-9-68

REVISIONS

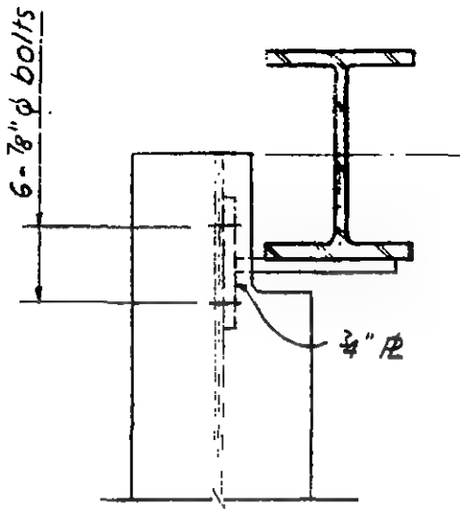

Plan

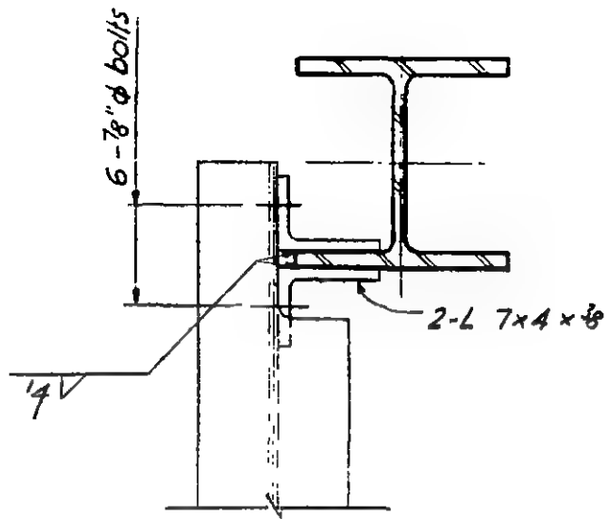

Plan

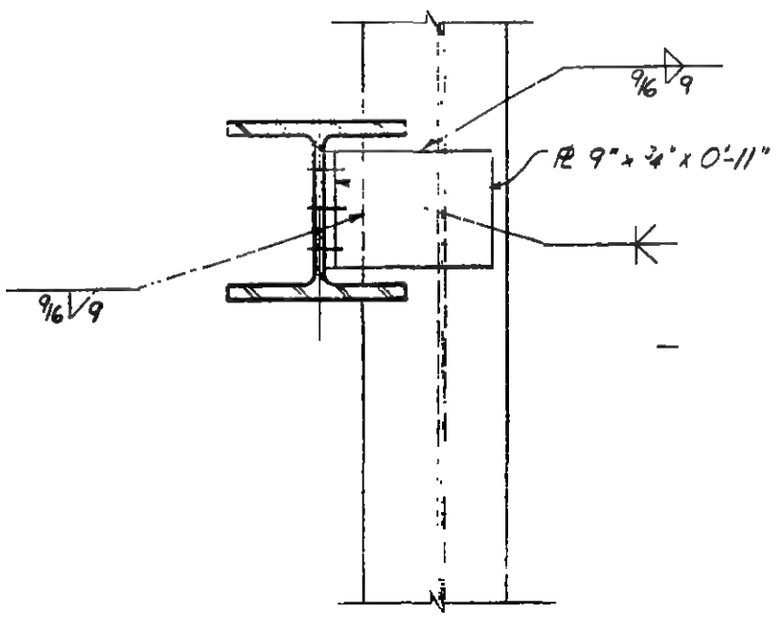

Section a-a

Detail 110A

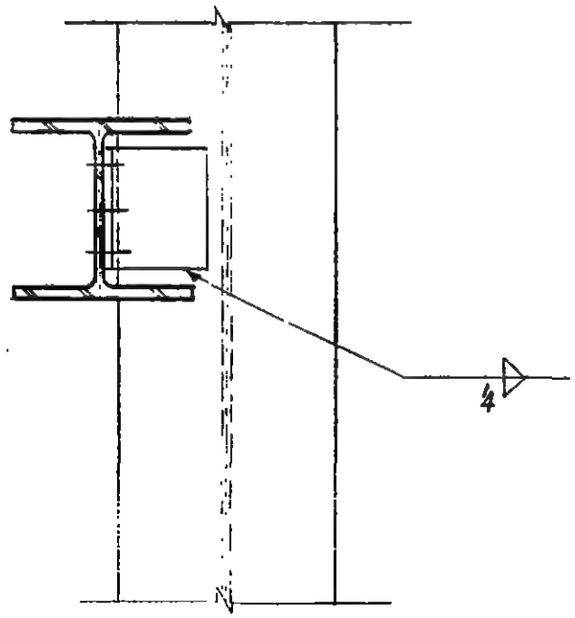

Section a-a

Detail 110B

LICENSED PROFESSIONAL ENGINEER
LESLIE E. ROBERTSON
No. 34360
UNIVERSITY OF THE STATE OF NEW YORK

6-AB2-12

WORTHINGTON, SKILLING, HELLE & JACKSON — Civil & Structural Engineers

PROJECT: THE WORLD TRADE CENTER | TITLE: CONNECTION DETAILS IIIA Thru G,J,L & M | DATE: 5-1-67

REVISIONS

5-9-67
6-30-67
7-23-67

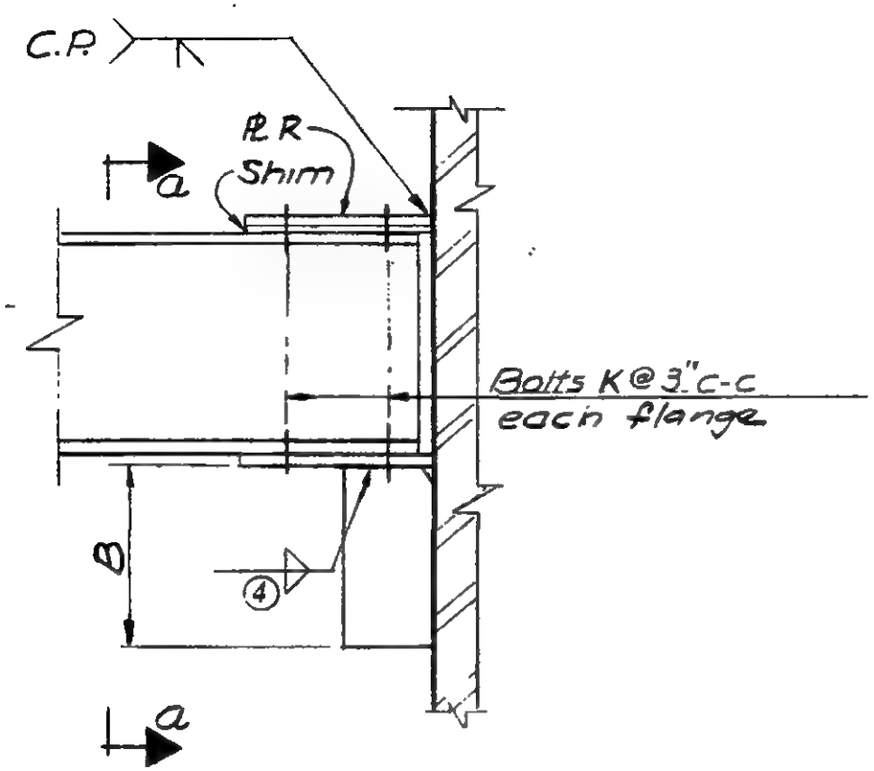

ELEVATION
Where ℄ R is used

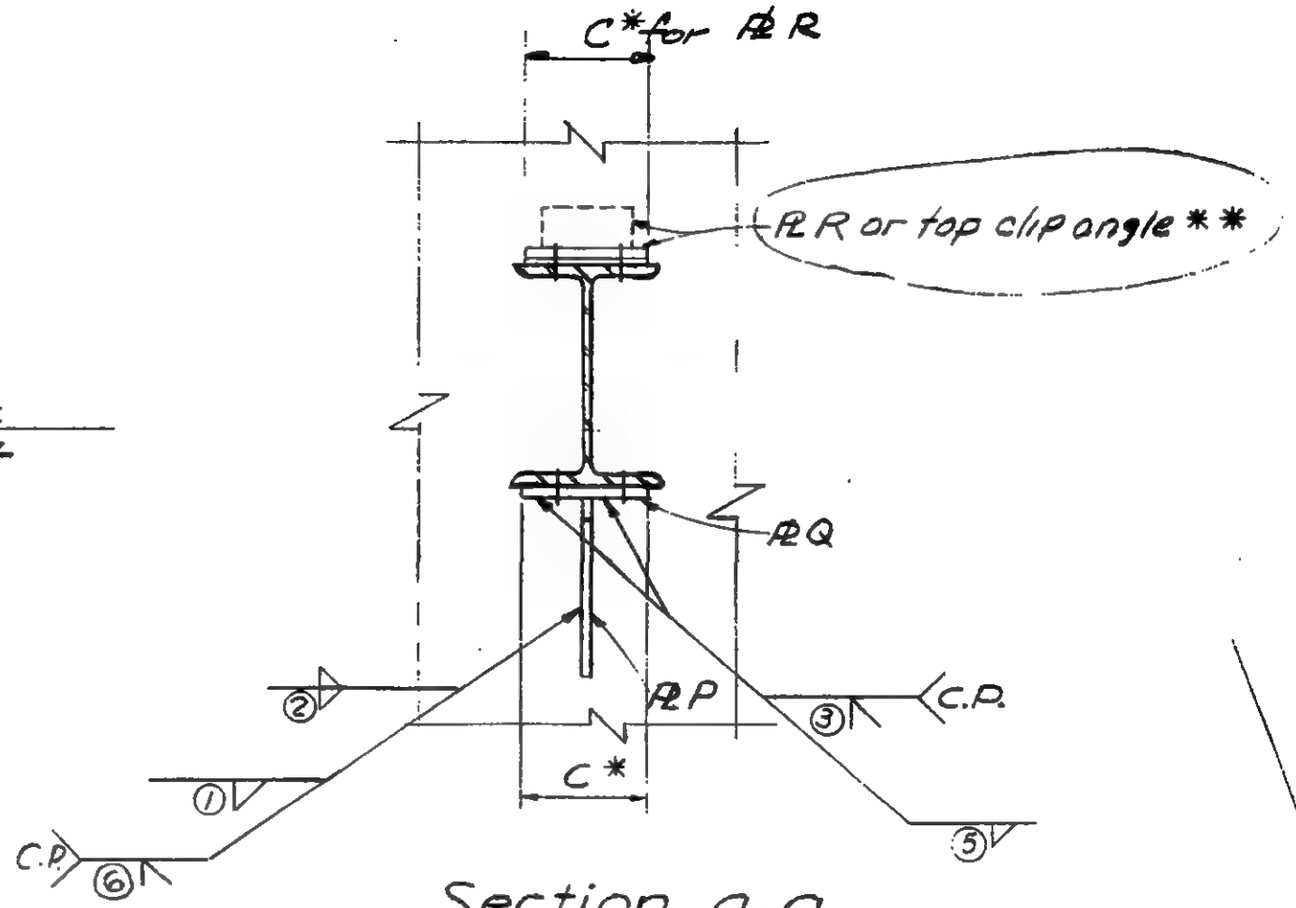

Section a-a

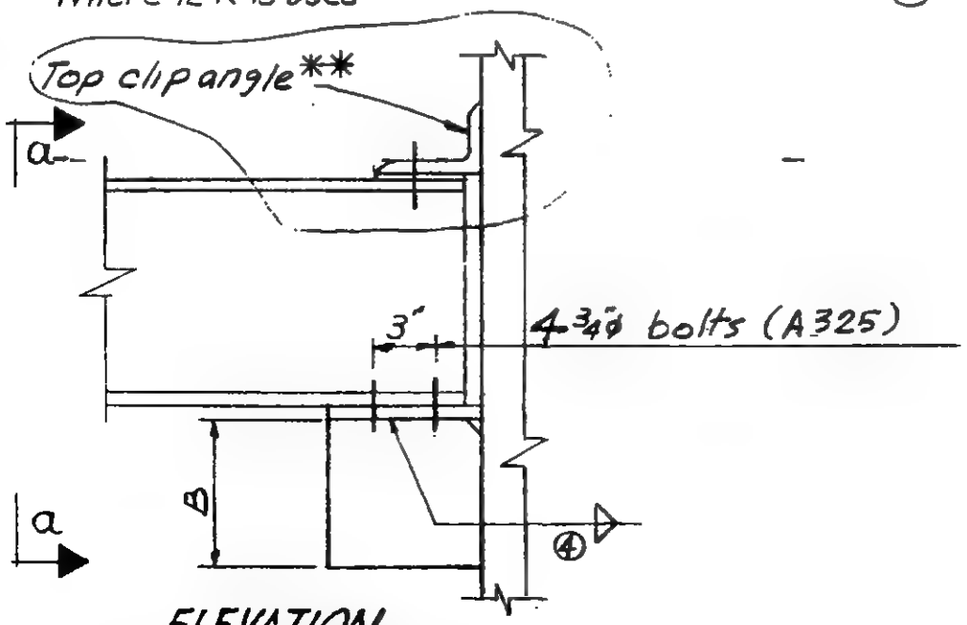

ELEVATION
Where top clip angle is used

* Where dimension C is not scheduled it shall be minimum required for bolt edge distance.

** Top clip angle is used where ℄ R is not scheduled. See Dwg. G-AB1-1 for detail of top clip angle.

LICENSED PROFESSIONAL ENGINEER — LESLIE E. ROBERTSON — No. 34360 — UNIVERSITY OF THE STATE OF NEW YORK

G-AB2-13

WORTHINGTON, SKILLING, HELLE & JACKSON — Civil & Structural Engineers

PROJECT: THE WORLD TRADE CENTER | TITLE: SCHEDULE FOR DETAIL 111 | DATE: 6-30-67

REVISIONS
12-21-67
1-24-68

	111 A	111 B	111 C	111 D	111 E	111 F	111 G
PLATES							
P	5" x 5/8"	6" x 3/4"	6" x 5/8"	6" x 1"	—	8" x 3/4"	6" x 5/8"
Q	7" x 5/8"	7" x 3/4"	18" x 7/8"	24" x 1 1/2"	7" x 1 3/4"	7" x 3/4"	19" x 3/4"
R	—	—	18" x 7/8"	24" x 1 1/2"	—	—	19" x 3/4"
ANGLES							
S	4 x 3 x 5/16 x 0'-6"	4 x 3 x 5/16 x 0'-6"	—	—	4 x 3 x 5/16 x 0'-4"	4 x 3 x 5/16 x 0'-6"	—
DIMENSIONS							
B	0'-10"	1'-2"	1'-0"	1'-4"	—	0'-10"	0'-10"
C					0'-4"		
BOLTS							
K	—	—	10-1 1/8" ϕ (A325)	14-1 1/8" ϕ (A490)	—	—	12-1" ϕ (A325)
WELDS							
①	—	—	—	—	—	—	—
②	3/8	1/2	1/2	—	—	1/2	1/2
③	—	—	C.P.	C.P.	C.P.	—	C.P.
④	5/16	5/16	5/16	1/2	—	1/2	5/16
⑤	3/8	1/2	—	—	—	1/2	—
⑥	—	—	—	C.P.	—	—	—

LICENSED PROFESSIONAL ENGINEER
LESLIE E. ROBERTSON
No. 34360
UNIVERSITY OF THE STATE OF NEW YORK

6-AB2-137

WORTHINGTON, SKILLING, HELLE & JACKSON — Civil & Structural Engineers

PROJECT: THE WORLD TRADE CENTER | TITLE: CONNECTION DETAIL III H & I | DATE: 7-5-67

REVISIONS
7-25-67
3-15-67

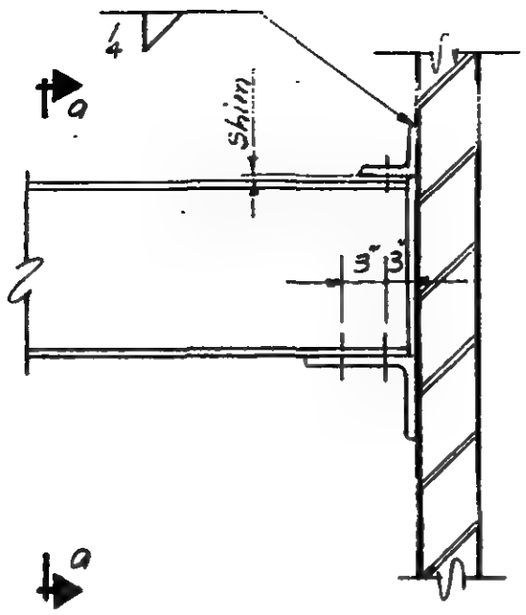

Elevation

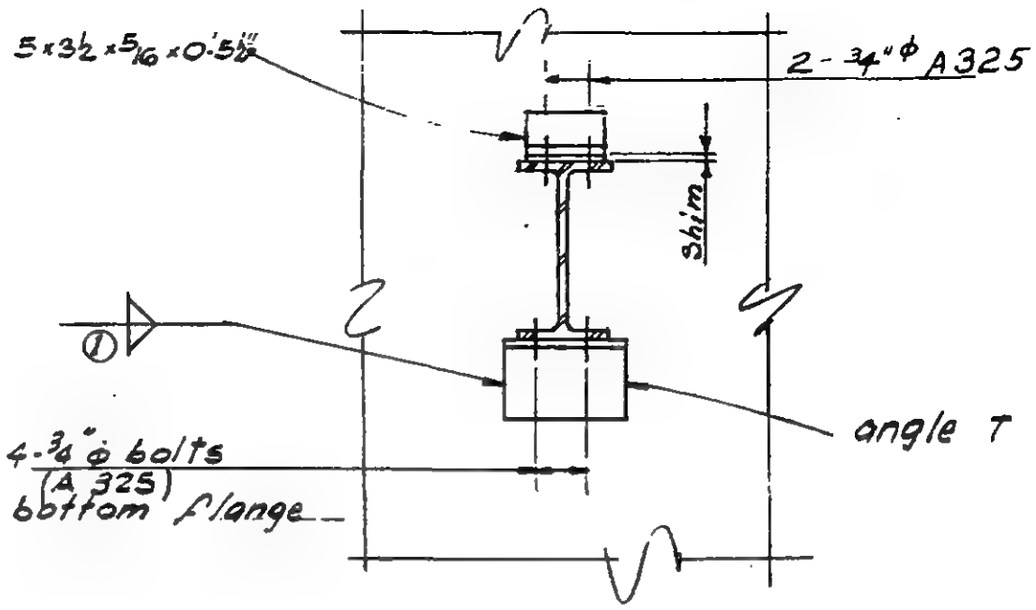

Section a-a

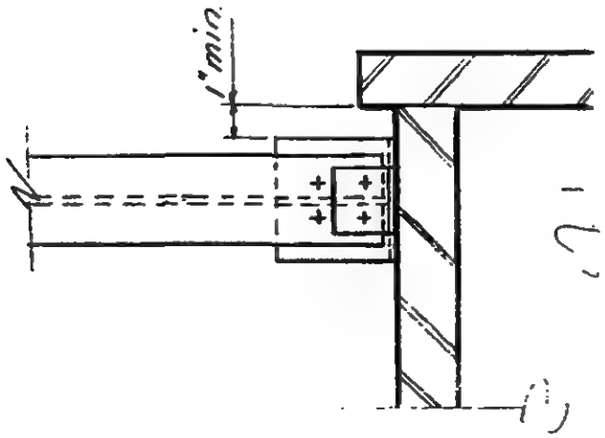

Plan

		8B 8WF17 to 8WF20 12B	8WF24 to 8WF28 10WF, 12WF, 14WF 16WF36 to 16WF50	14B
ANGLES T	III I	L8"x4"x1"x0'-5	L8"x6"x1"x0'-8"	L8"x6"x1"x0'-8"
	III H	L8"x4"x1"x0'-5"	L8"x4"x1"x0'-8"	L8"x6"x1"x0'-5"
WELDS ①		5/8"	½"	½"

G-AB2-13.8

LICENSED PROFESSIONAL ENGINEER
LESLIE E. ROBERTSON
No. 34360
THE STATE OF NEW YORK

VORTHINGTON, SKILLING, HELLE & JACKSON — Civil & Structural Engineers

PROJECT THE WORLD TRADE CENTER | TITLE CONNECTION DETAIL III K, N, P, Q, U, W | DATE 7-28-67

REVISIONS
1 4-15-67
10-5-67
11-16-67

6-AB2-13.4 for schedule

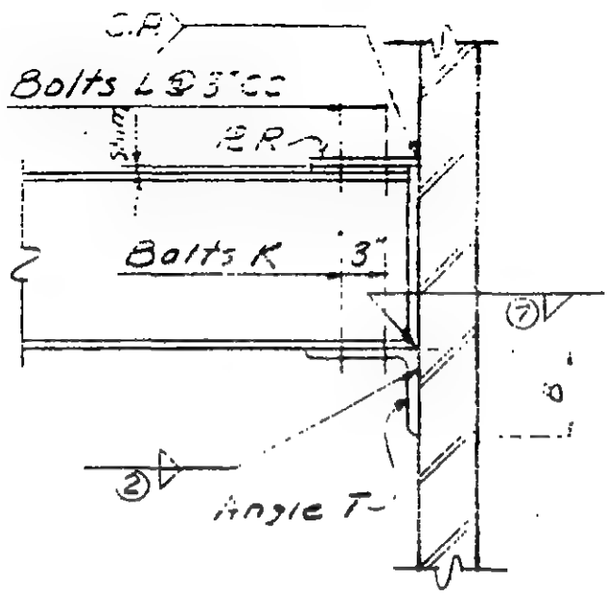

Elevation

6-AB2-13.5 for schedule

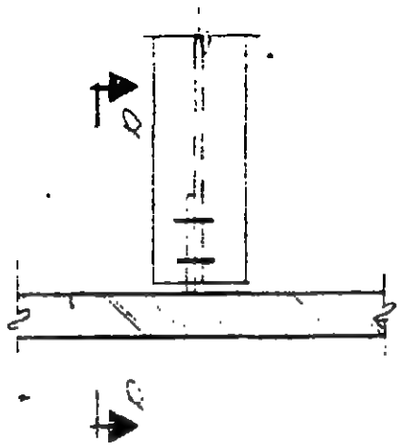

Plan

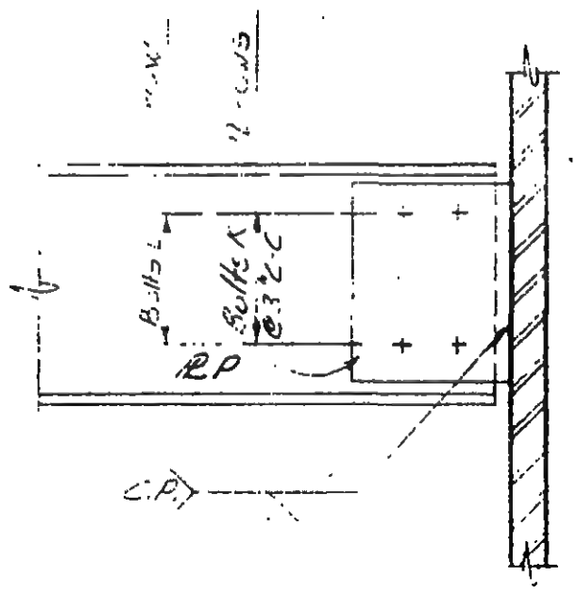

Section a-a

Detail III K & N & P

Detail III Q, U, W

6-AB2-13.3

WORTHINGTON, SKILLING, HELLE & JACKSON — Civil & Structural Engineers

PROJECT: THE WORLD TRADE CENTER | TITLE: CONNECTION DETAIL III K,N,P,Q,U,W | DATE: 7-28-67

REVISIONS
9-15-67
10-5-67
11-16-67
12-13-67

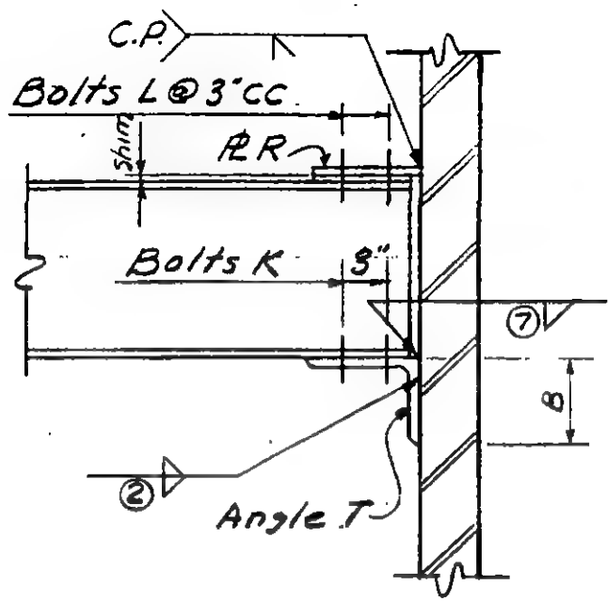

Elevation

For details K & P use bolts w/washers on web

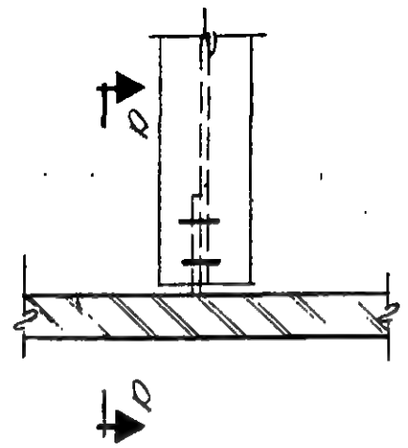

Plan

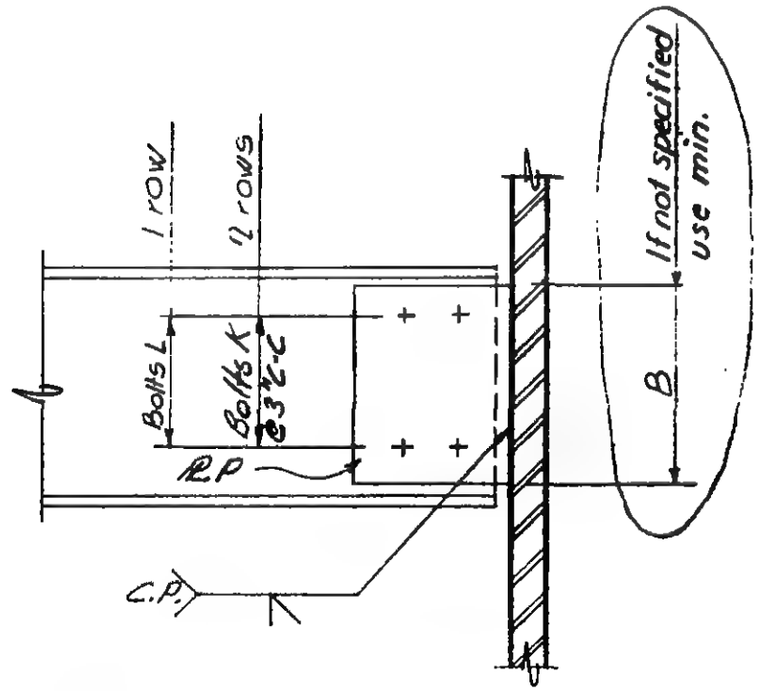

Section a-a

Note: Use alt. for all scheduled Details, flor 10 and above

Detail III N

Detail III K, P, Q, U, W

G-AB2-1

LICENSED PROFESSIONAL ENGINEER — LESLIE E. ROBERTSON — No. 3

SKILLING - HELLE - CHRISTIANSEN - ROBERTSON

PROJECT THE WORLD TRADE CENTER | TITLE SCHEDULE FOR DETAIL III J - P

REVISIONS

5-15-67

11-10-67

Ref. Dwg.	G-AB2-13	G-AB2-13.3	G-AB2-13	G-AB2-13	G-AB2-13.3	G-
	III J	III K	III L	III M	III N	
PLATES						
P	3/4"	—	7" x 3/4"	7" x 5/8"	—	
Q	1/4"	—	7/8"	1/4"	—	
R	-	1/8"	7/8"	3/4"	3/8"	
ANGLE						
L	-	8"x4"x1"x0'-2"	—	—	8"x4"x1"x0'-2"	
WELDING						
B	1'-3"	0'-4"	1'-3"	1'-0"	0'-4"	
C	—	—	0'-9"	—	—	
BOLTS						
K	—	4-3/4"ϕ	4-1"ϕ	4-7/8"ϕ	4-3/4"ϕ	
L	-	4-3/4"ϕ	4-1"ϕ	—	4-3/4"ϕ	
WELDS						
1)	—	—	—			
2)	—	1/8	—	—	1/4	
3)	C.P.	—	C.P.	C.P.	—	
4)	5/16"		5/16"	5/16"	—	
5)	—		—	—	—	
6)	C.P.		C.P.	C.P.	1/2	
7)	—		—	—	—	

SKILLING - HELLE - CHRISTIANSEN - ROBERTSON Structural & Civil Engineers

PROJECT THE WORLD TRADE CENTER | TITLE SCHEDULE FOR DETAIL III J - P | DATE 7-28-67

REVISIONS
J-15-67
11-10-67
12-13-67

Ref. Dwg.	6-AB2-13	6-AB2-13.3	6-AB2-13	6-AB2-13	6-AB2-13.3	6-AB2-13.3
	III J	III K	III L	III M	III N	III P
PLATES						
P	3/4"	3/4"	7" x 3/4"	7" x 5/8"	—	5/8"
Q	3/4"	—	7/8"	3/4"	—	—
R	—	—	7/8"	3/4"	3/8"	—
ANGLE						
T	—	—	—	—	8" x 4" x 1" x 0'-5"	—
DIMENSIONS						
B	1'-3"	0'-6½"	1'-3"	1'-0"	0'-4"	0'-9"
C	—	—	0'-8"	—	—	—
BOLTS						
K	—	4-1"φ	4-1"φ	4-7/8"φ	4-3/4"φ	6-1"φ
L	—	—	4-1"φ	—	4-3/4"φ	—
WELDS						
1	—	—	—	—	—	—
2	—	—	—	—	5/8"	—
3	C.P.	—	C.P.	C.P.	—	—
4	5/16"	—	3/8"	5/16"	—	—
5	—	—	—	—	—	—
6	C.P.	—	C.P.	C.P.	1/2"	—
7	—		—	—	—	—

Note: Use alt. for all sch. Details floor 10 and above

6-AB2-13.4

LICENSED PROFESSIONAL ENGINEER LESLIE E. ROBERTSON No. 34360 UNIVERSITY OF THE STATE OF NEW YORK

SKILLING - HELLE - CHRISTIANSEN - ROBERTSON Structural & Civil Engineers

PROJECT THE WORLD TRADE CENTER | TITLE SCHEDULE FOR DETAIL 111 Q, R, S, T, U, V. | DATE 9-15-67

REVISIONS

10-2-67
10-5-67

Ref. Dwg.	G-AB2-13.3	G-AB2-13.6	G-AB2-13.6	G-AB2-13.6	G-AB2-13.3	G-AB2-13.6
	111 Q	111 R	111 S	111 T	111 U	111 V
PLATES						
P	5/8"	11" x 1"	9" x 7/8"	9" x 7/8"	1/2"	5" x 3/4"
Q	—	1"	7/8"	7/8"	—	3/4"
R	—	3/8"	3/8"	3/8"	—	1/2"
BOLTS						
K	8 - 7/8" ϕ	4 - 3/4" ϕ	4 - 3/4" ϕ	4 - 3/4" ϕ	—	4 - 3/4" ϕ
L	—	4 - 7/8" ϕ	4 - 7/8" ϕ	4 - 7/8" ϕ	4 - 7/8" ϕ	4 - 3/4" ϕ
DIMENSIONS						
A	—	1'-6"	1'-4"	1'-5"	—	1'-0"
WELDS						
①	—	5/16	5/16	5/16	—	5/16

LICENSED PROFESSIONAL ENGINEER LESLIE E. ROBERTSON NO. 34360 UNIVERSITY OF THE STATE OF NEW YORK

G-AB2-13.5

SKILLING - HELLE - CHRISTIANSEN - ROBERTSON Structural & Civil Engineers

PROJECT THE WORLD TRADE CENTER | TITLE CONNECTION DETAIL III R, S, T & V | DATE 10-2-67

REVISIONS

10-31-67

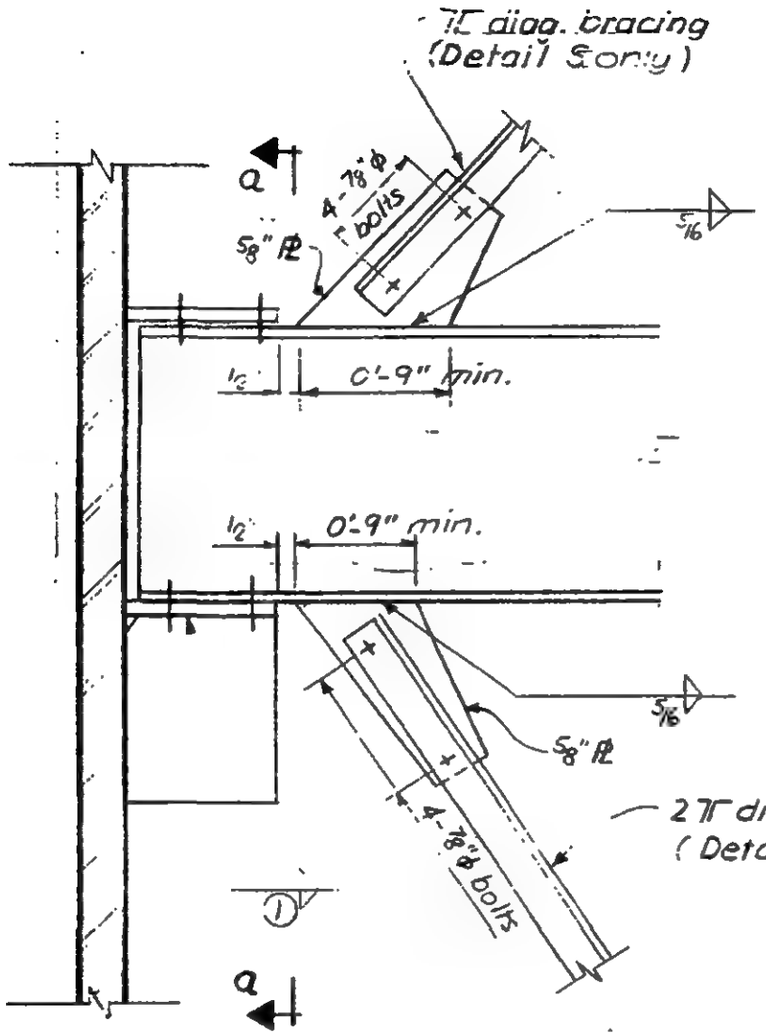

Elevation

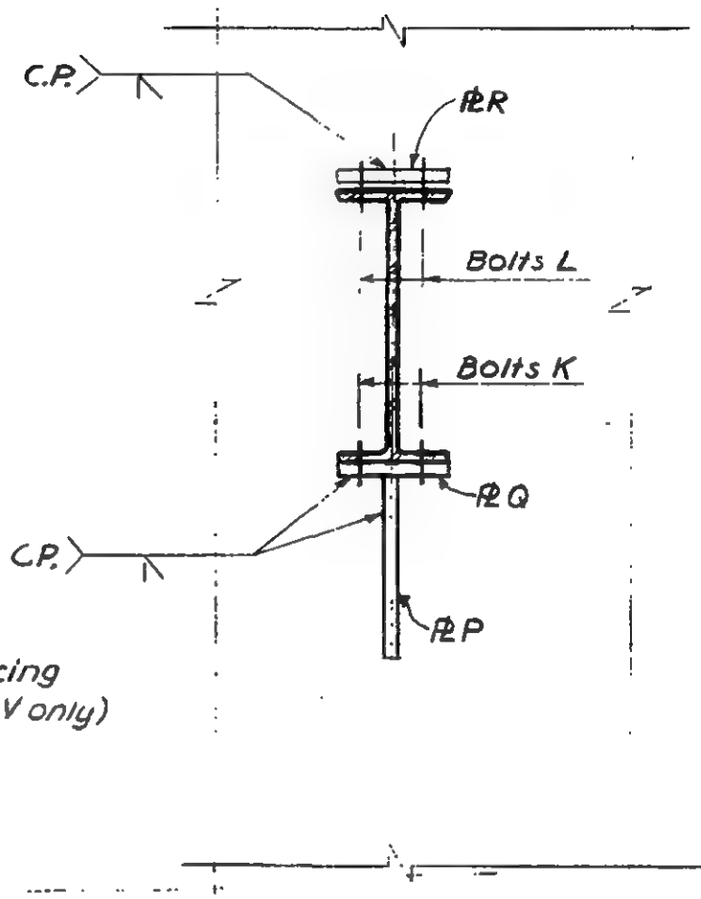

Section a-a

Detail III R: See G-AB5-97 for bracing elevation

Detail III S, V: See G-AB5-97 or G-AB5-98 for bracing elevation

LICENSED PROFESSIONAL ENGINEER
LESLIE E. ROBERTSON
No. 34367
UNIVERSITY OF THE STATE OF NEW YORK

6-AB2-13.6

SKILLING - HELLE - CHRISTIANSEN - ROBERTSON Structural & Civil Engineers

PROJECT THE WORLD TRADE CENTER | TITLE SCHEDULE FOR DETAIL III W | DATE 11-16-67

REVISIONS

REF. DWGS.	6-AB2-13.3					
	III W					
PLATES						
P	$\frac{3}{8}$"					
BOLTS						
K	4-$\frac{3}{4}$" ϕ					

6-AB2-13.7

SKILLING - HELLE - CHRISTIANSEN - ROBERTSON Structural & Civil Engineers

PROJECT THE WORLD TRADE CENTER | TITLE CONNECTION DETAIL 113 A, 113 B | DATE 12-21-67

REVISIONS

1-10-69

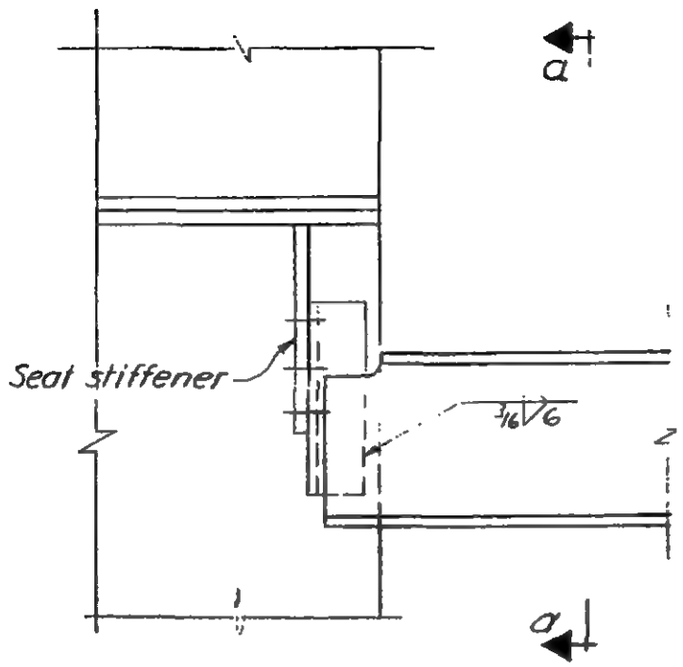

ELEVATION 113A

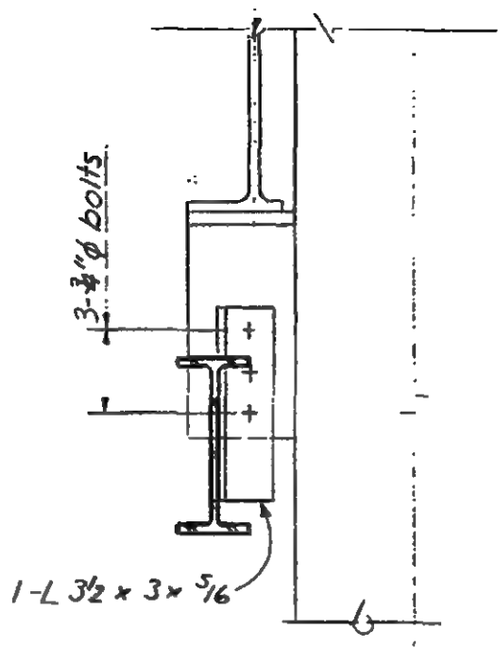

Section a-a

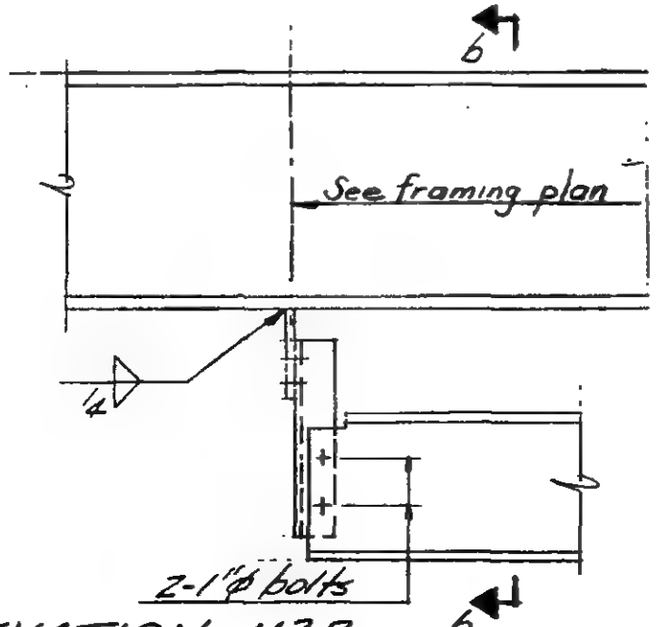

ELEVATION 113B

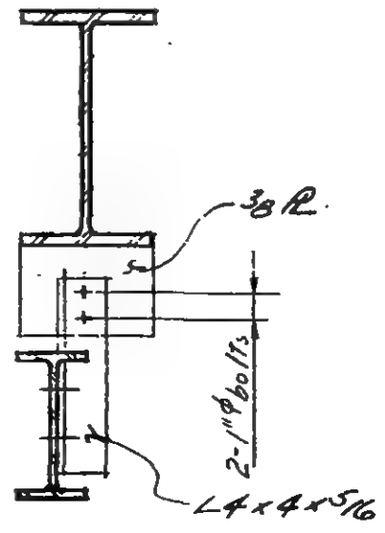

Section b-b

LICENSED PROFESSIONAL ENGINEER
LESLIE E. ROBERTSON
No. 34360
UNIVERSITY OF THE STATE OF NEW YORK

6-AB2-15

SKILLING - HELLE - CHRISTIANSEN - ROBERTSON Structural & Civil Engineers

PROJECT THE WORLD TRADE CENTER | TITLE CONNECTION DETAIL P02A-E | DATE 11-7-67

REVISIONS

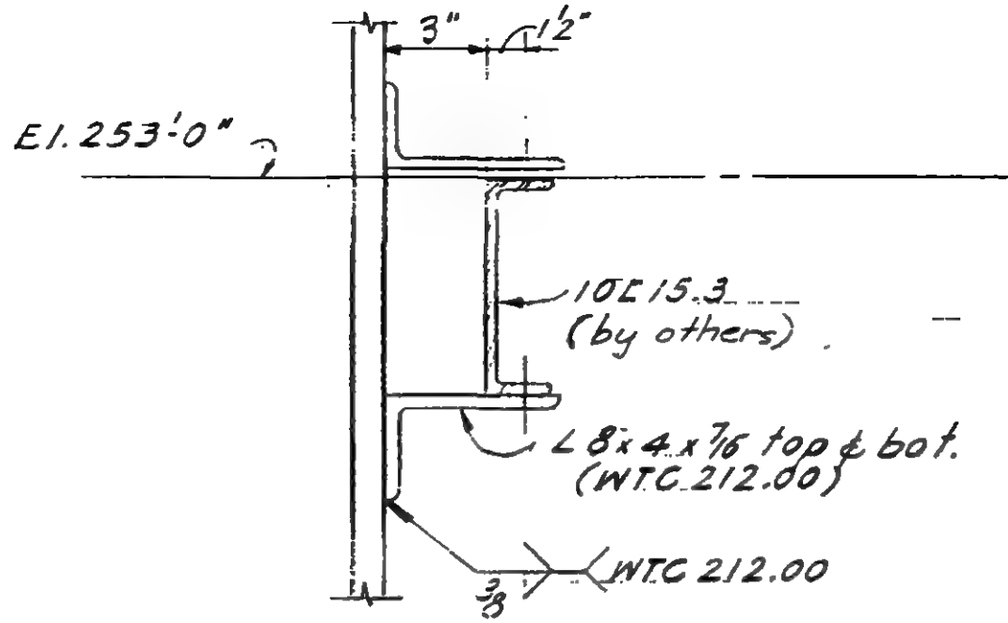

Section P02 A, C & D

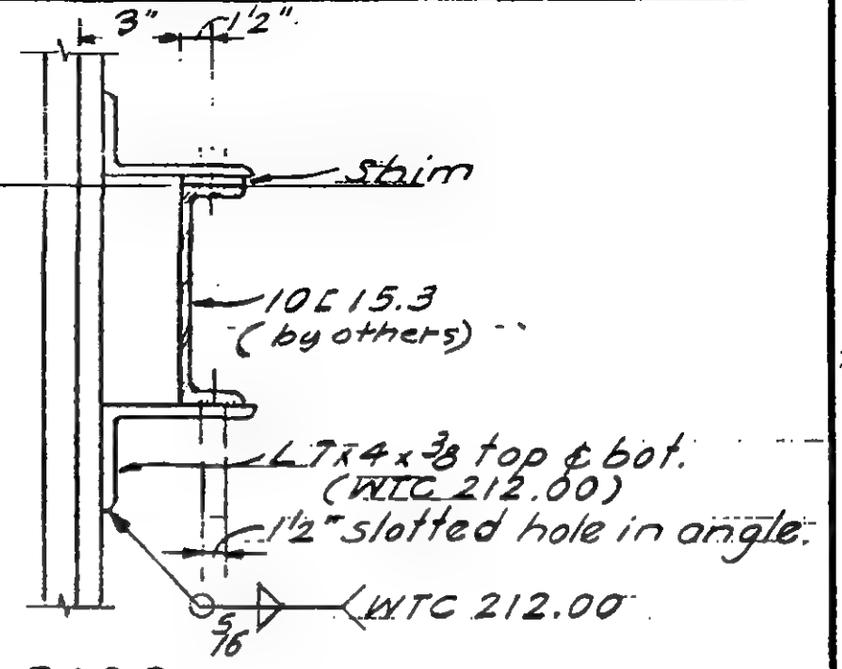

Section P02 B

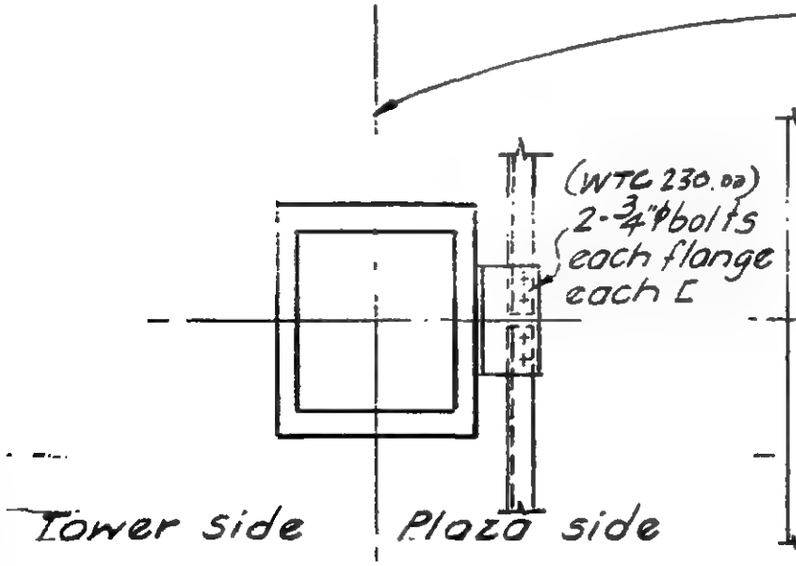

Plan P02A

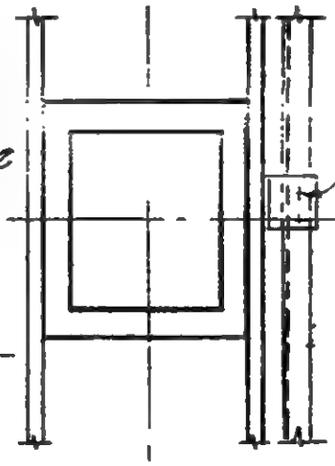

Plan P02B

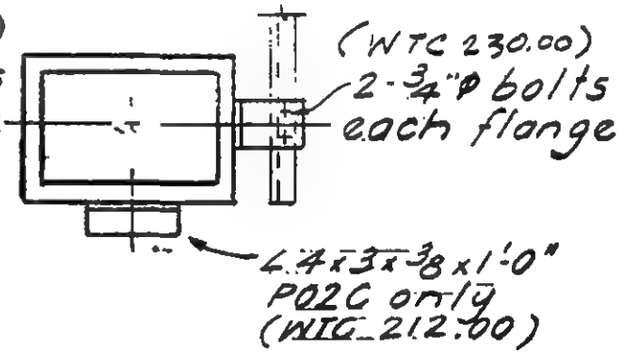

Plan P02 C

Plan P02 D

Plan P02 E

LICENSED PROFESSIONAL ENGINEER
LESLIE E. ROBERTSON
No. 34360
UNIVERSITY OF THE STATE OF NEW YORK

6-AB2-25

SKILLING - HELLE - CHRISTIANSEN - ROBERTSON | Structural & Civil Engineers

PROJECT THE WORLD TRADE CENTER | TITLE PUMP PLATFORM AT SERVICE LEVEL (El. 294') | DATE 12-18-67

REVISIONS

For opening in grating
See approved pump shop dwgs.

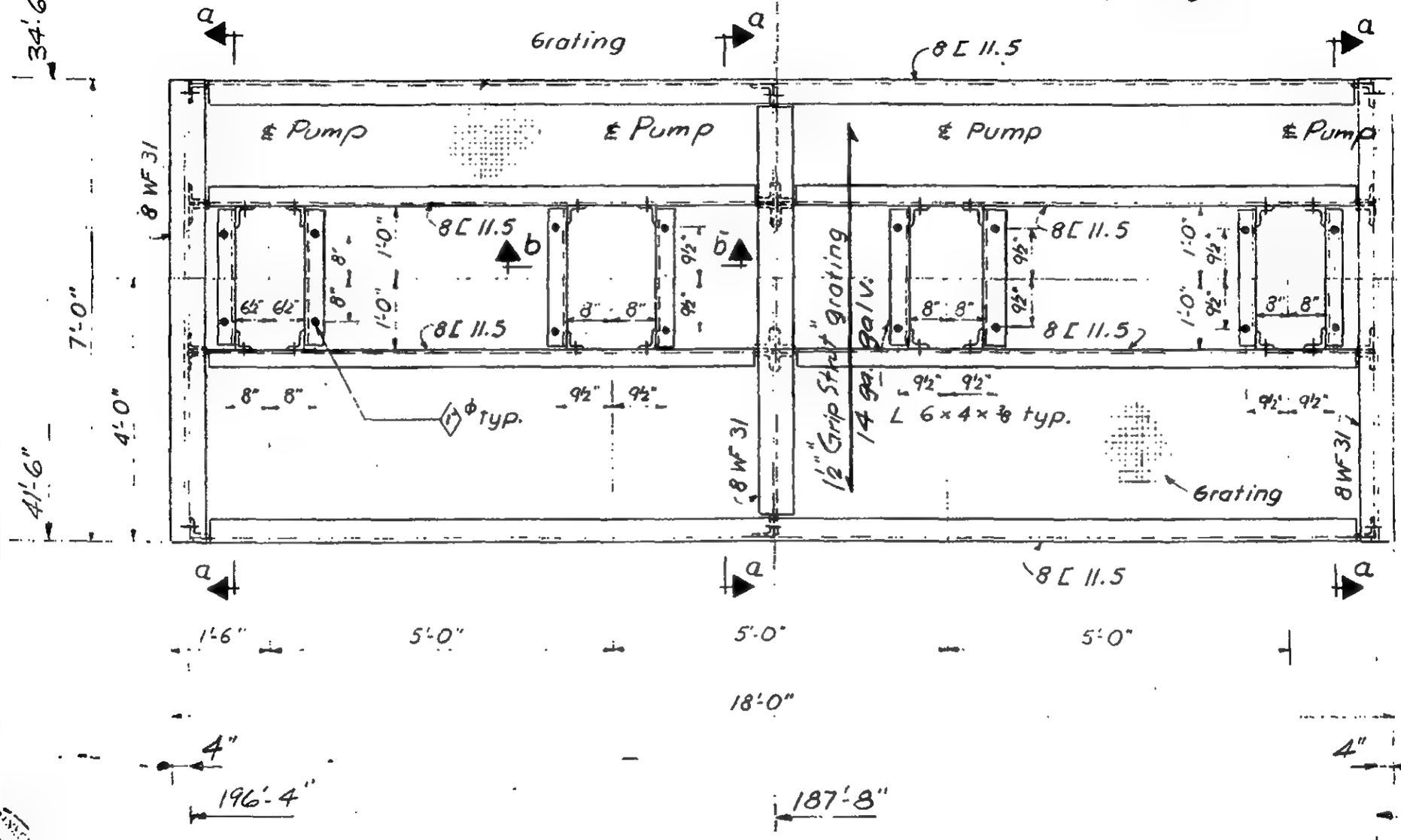

LESLIE E. ROBERTSON
REGISTERED PROFESSIONAL ENGINEER
No. 34
UNIVERSITY OF THE STATE OF NEW YORK

6-AB2-30.

SKILLING - HELLE - CHRISTIANSEN - ROBERTSON Structural & Civil Engineers

PROJECT THE WORLD TRADE CENTER | TITLE PUMP PLATFORM AT SERVICE LEVEL (El. 294') | DATE 12-18-67

REVISIONS

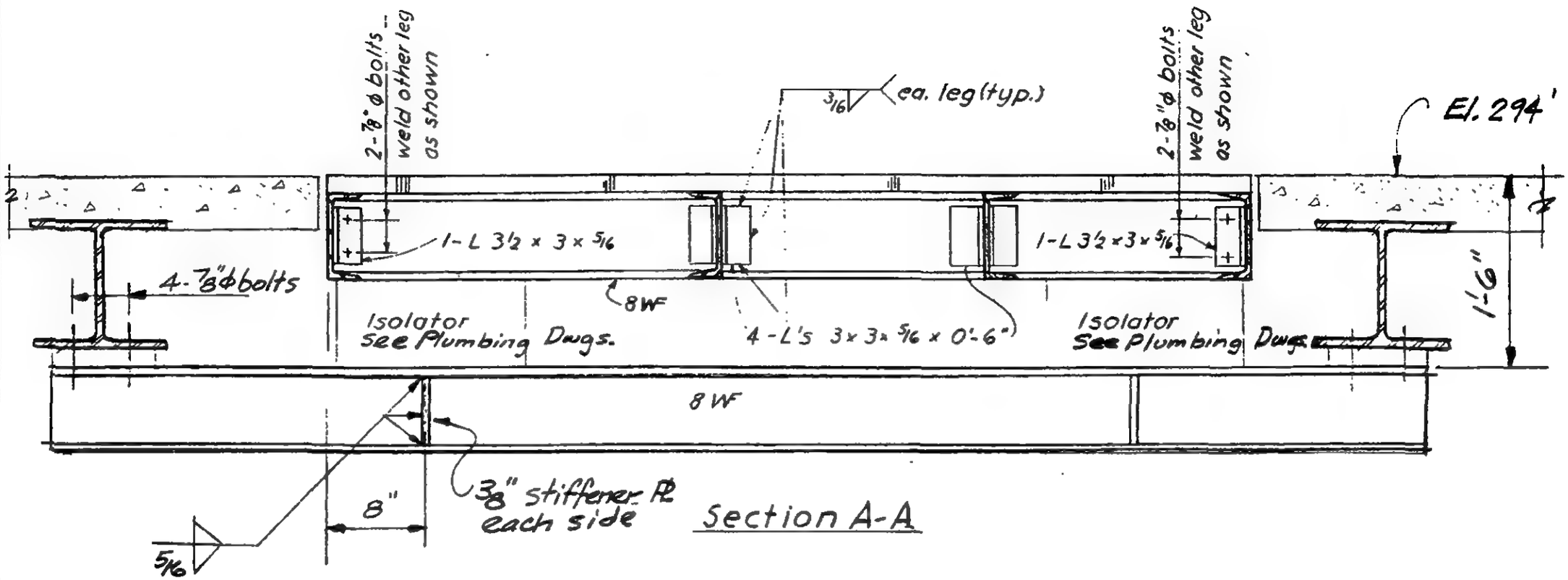

Section A-A

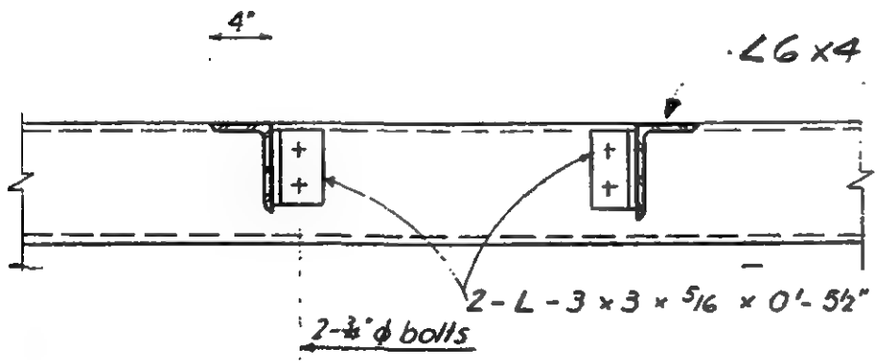

Section B-B (typ.)

LICENSED PROFESSIONAL ENGINEER LESLIE E. ROBERTSON No. 34360 UNIVERSITY OF THE STATE OF NEW YORK

6-AB2-31

SKILLING - HELLE - CHRISTIANSEN - ROBERTSON Structural & Civil Engineers

PROJECT THE WORLD TRADE CENTER | TITLE PUMP PLATFORM TROLLEY SUPPORT | DATE 1-24-68

REVISIONS

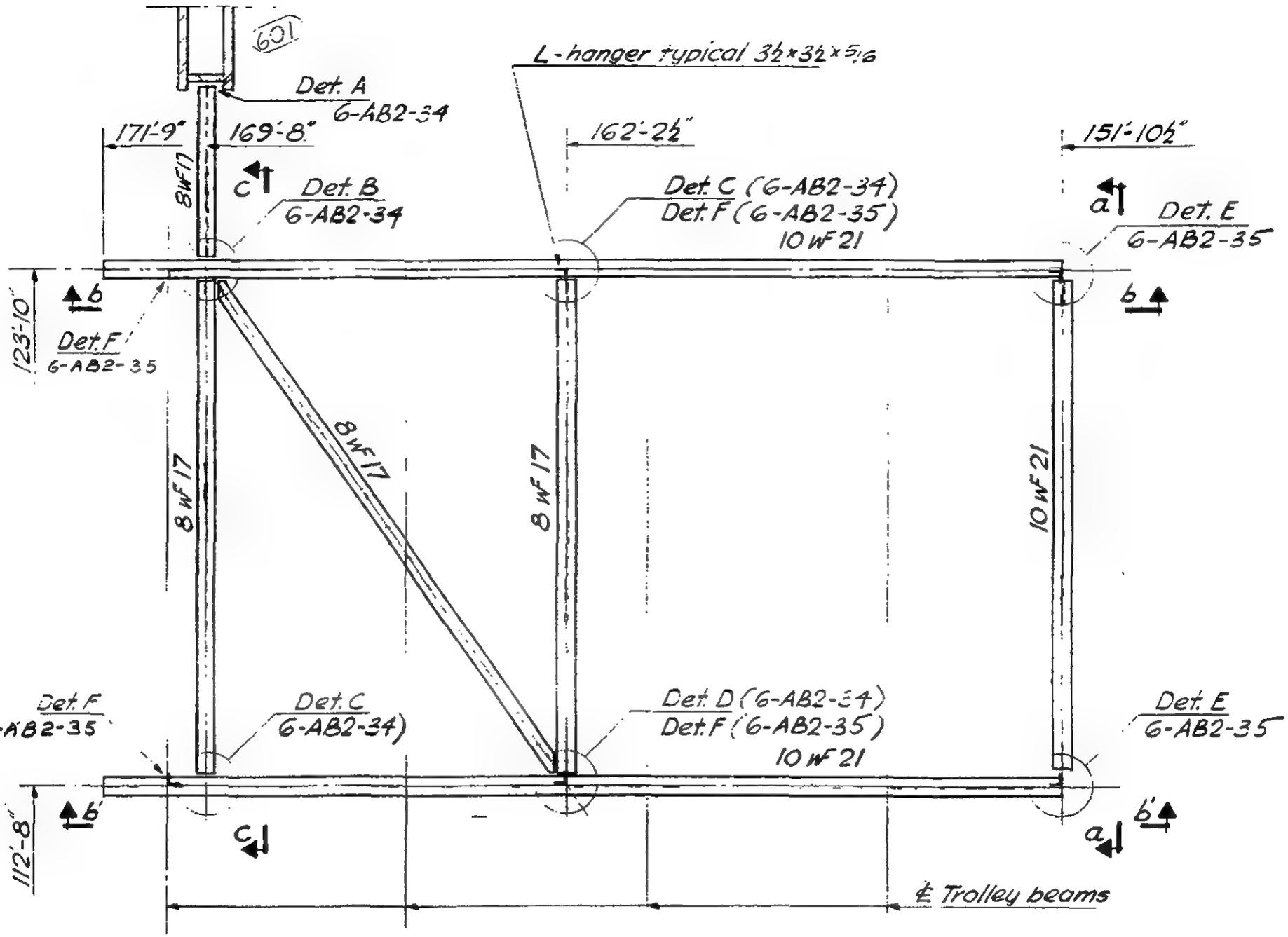

Plan

All steel @ (-8'-9") below reference floor 43

For Sections a-a, b-b, b'-b' see 6-AB2-33

LICENSED PROFESSIONAL ENGINEER LESLIE E. ROBERTSON No. 34360 UNIVERSITY OF THE STATE OF NEW YORK

6-AB2-32

SKILLING - HELLE - CHRISTIANSEN - ROBERTSON Structural & Civil Engineers

PROJECT THE WORLD TRADE CENTER | TITLE PUMP PLATFORM TROLLEY SUPPORT | DATE 1-24-68

REVISIONS

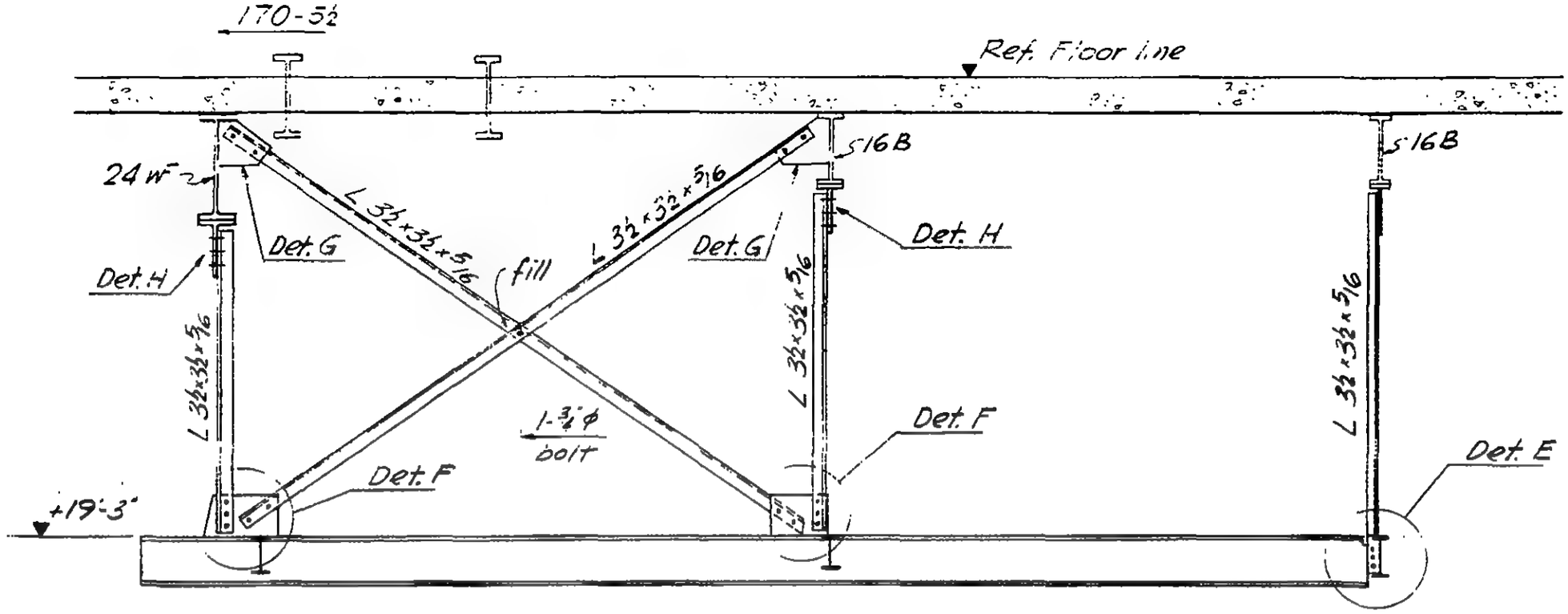

Section b-b (6'-6' similar)

For Details See 6-AB2-35

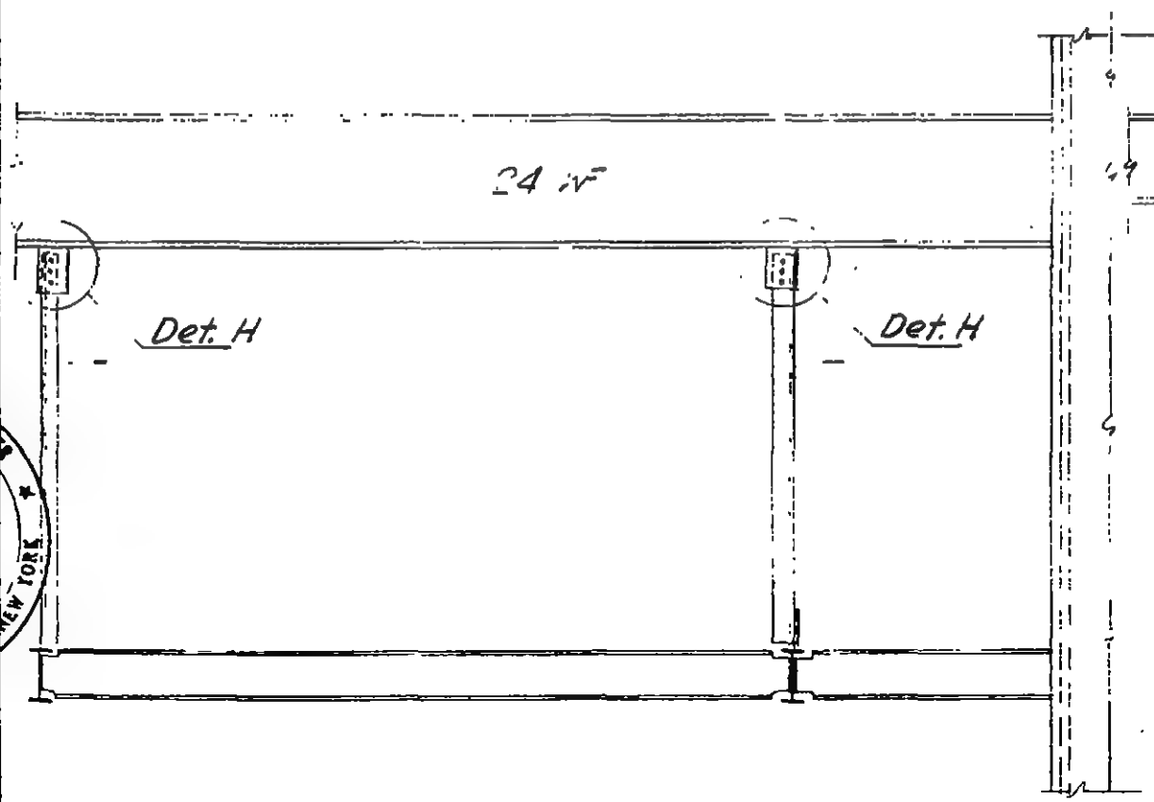

Section c-c

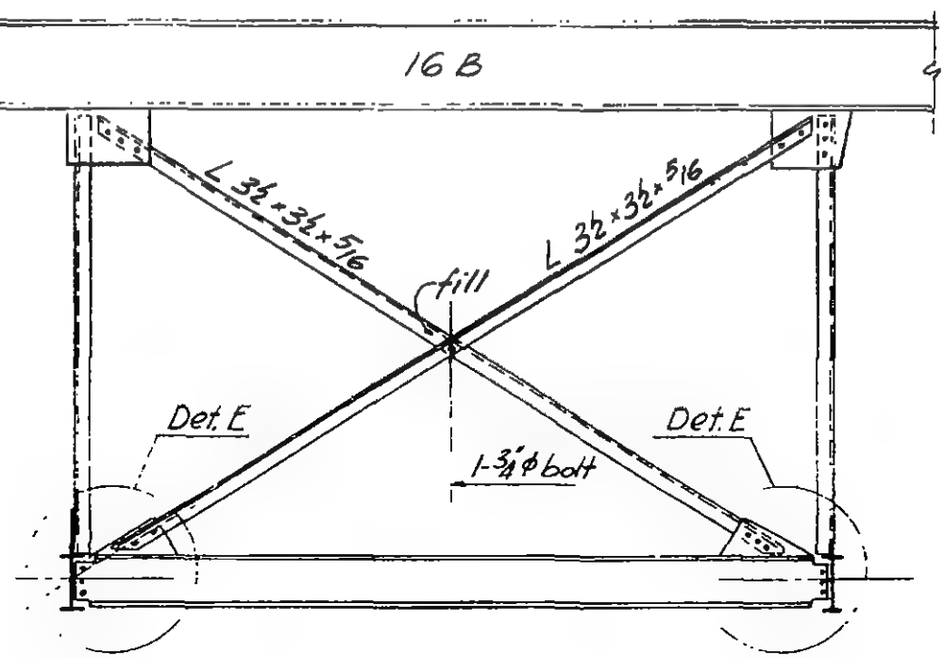

Section a-a

LICENSED PROFESSIONAL ENGINEER
LESLIE E. ROBERTSON
No. 34360
UNIVERSITY OF THE STATE OF NEW YORK

6-AB2-331

SKILLING - HELLE - CHRISTIANSEN - ROBERTSON — Structural & Civil Engineers

PROJECT THE WORLD TRADE CENTER | TITLE PUMP PLATFORM TROLLEY SUPPORT DETAILS | DATE 1-24-68

REVISIONS

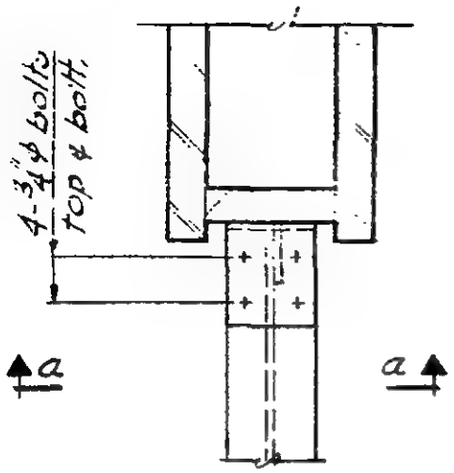

Plan

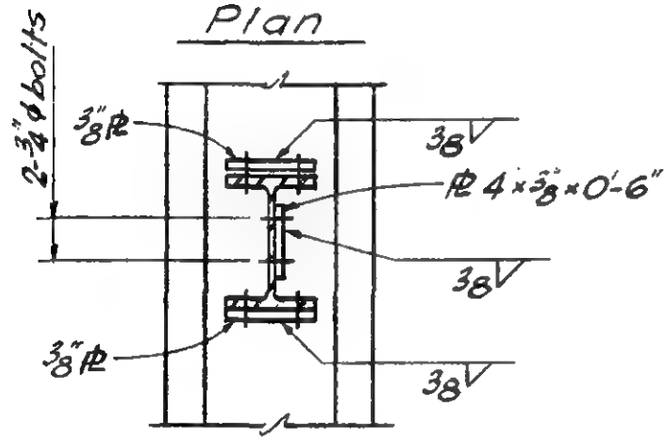

Section a-a

DETAIL A

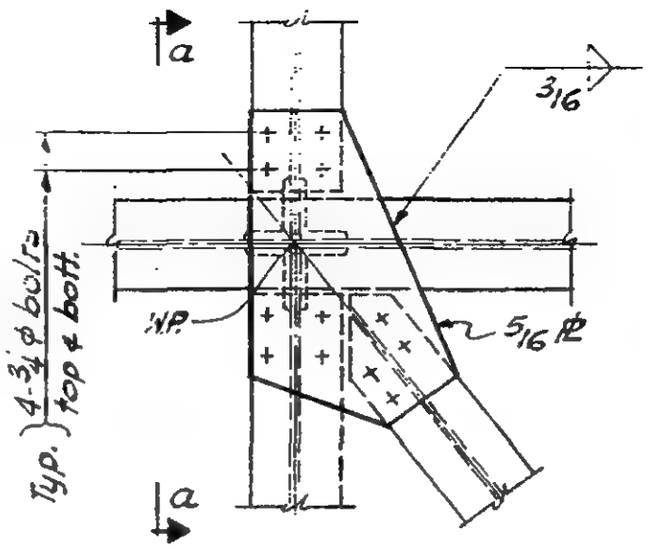

Plan

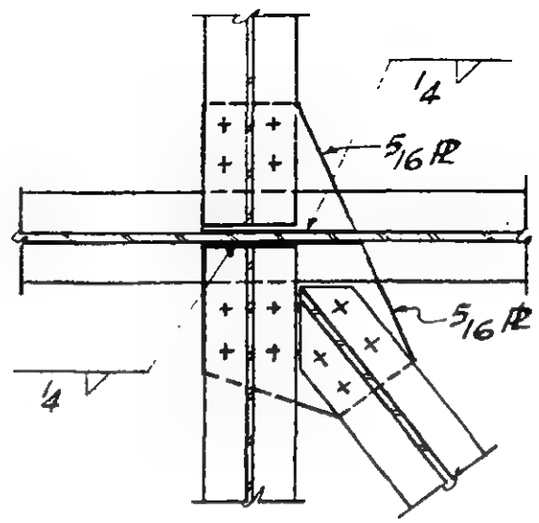

Section b-b

DETAIL B

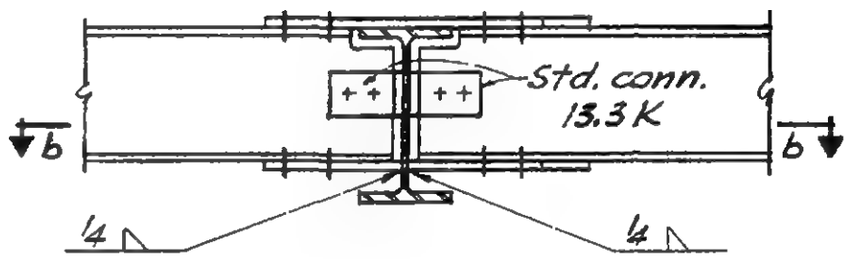

Section a-a

DETAIL C

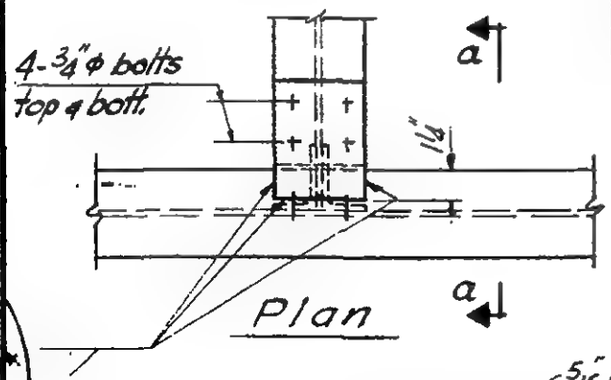

Plan

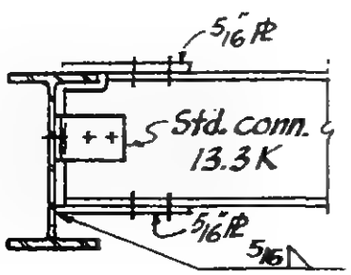

Section a-a

DETAIL D

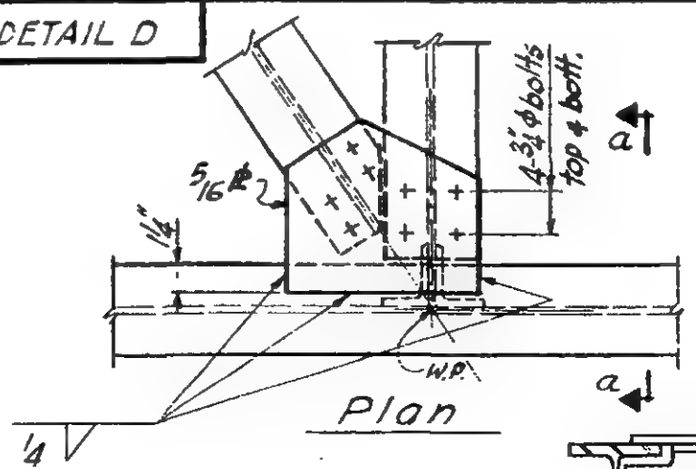

Plan

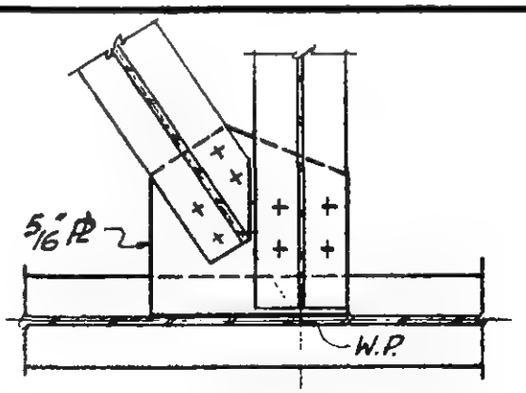

Section b-b

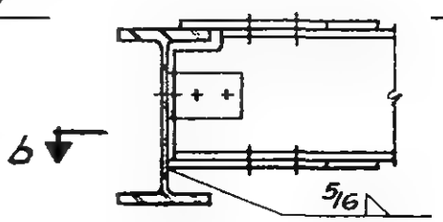

Section a-a

LICENSED PROFESSIONAL ENGINEER
LESLIE E. ROBERTSON
No. 34360
UNIVERSITY OF THE STATE OF NEW YORK

G-AB2-34

SKILLING - HELLE - CHRISTIANSEN - ROBERTSON Structural & Civil Engineers

PROJECT THE WORLD TRADE CENTER | TITLE PUMP PLATFORM TROLLEY SUPPORT DETAILS | DATE 1-24-68

REVISIONS

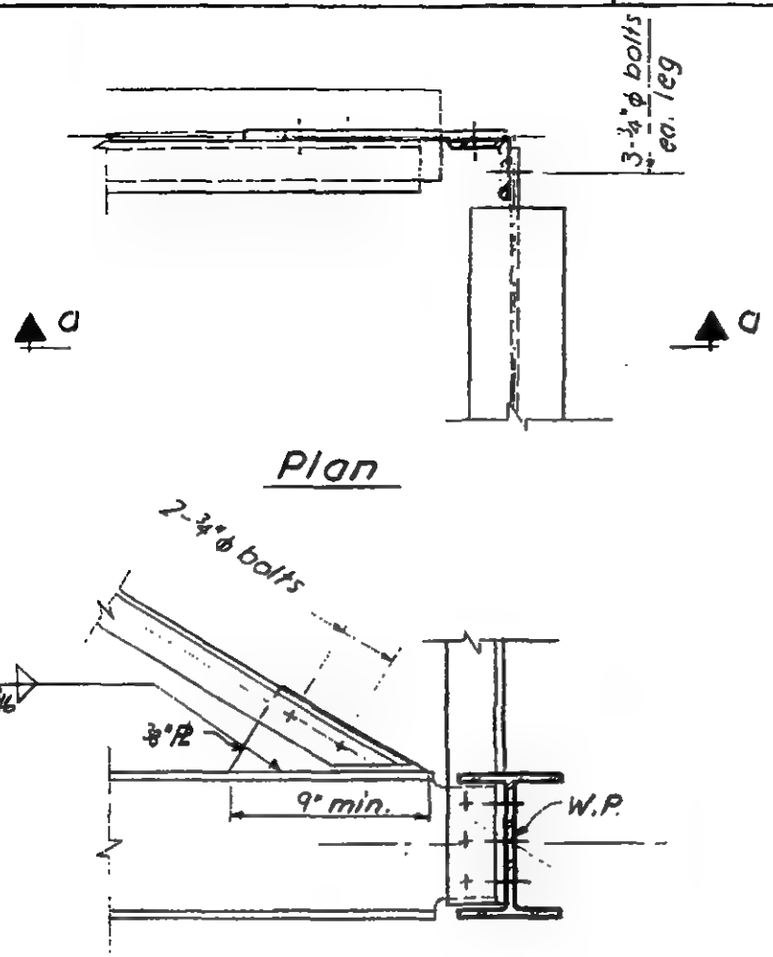

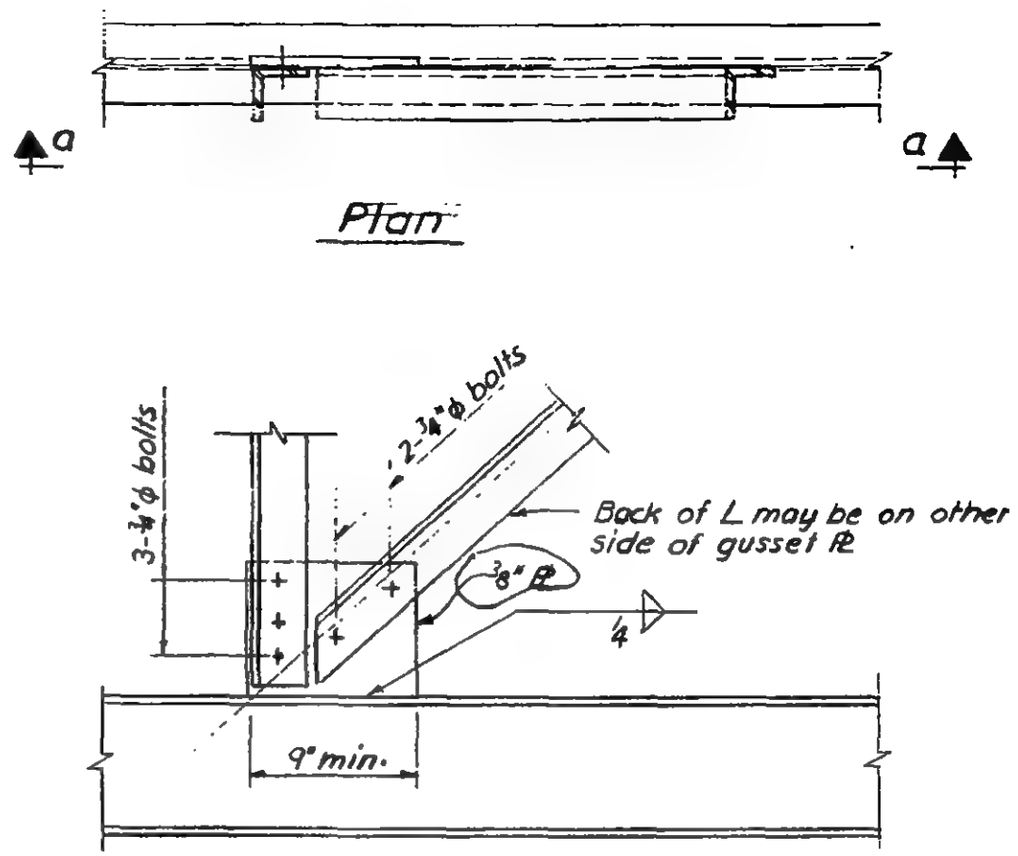

DETAIL E	DETAIL F
DETAIL G	DETAIL H

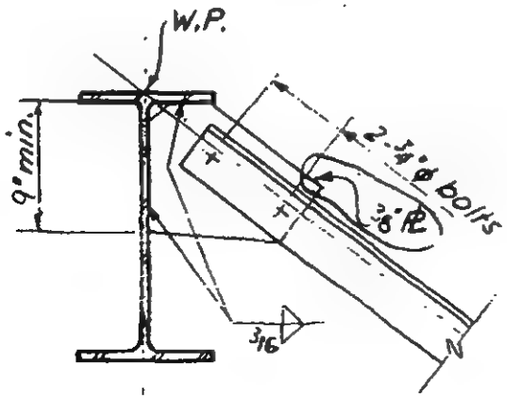

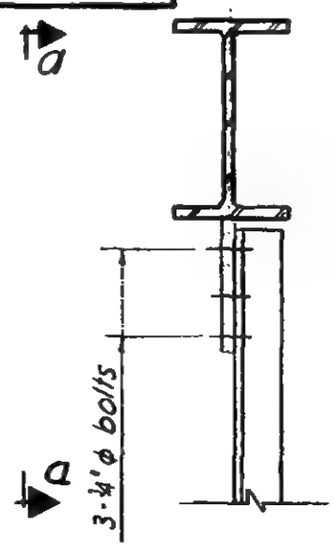

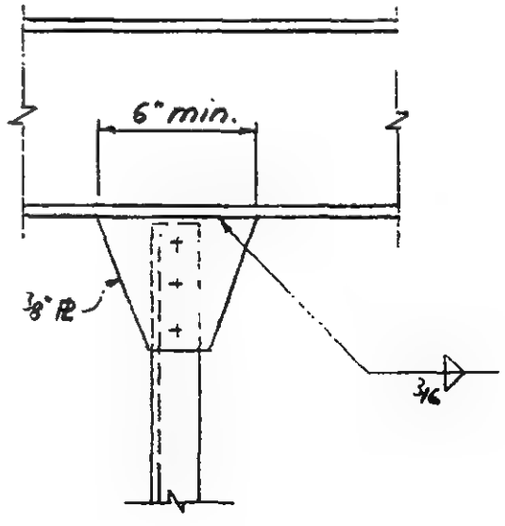

Section a-a

6-AB2-35

LICENSED PROFESSIONAL ENGINEER
LESLIE E. ROBERTSON
No. 34360
UNIVERSITY OF THE STATE OF NEW YORK

SKILLING - HELLE - CHRISTIANSEN - ROBERTSON Structural & Civil Engineers

PROJECT THE WORLD TRADE CENTER | TITLE ELEVATOR MACH ROOM TROLLEY BEAM SUPPORT | DATE 1-24-68

REVISIONS

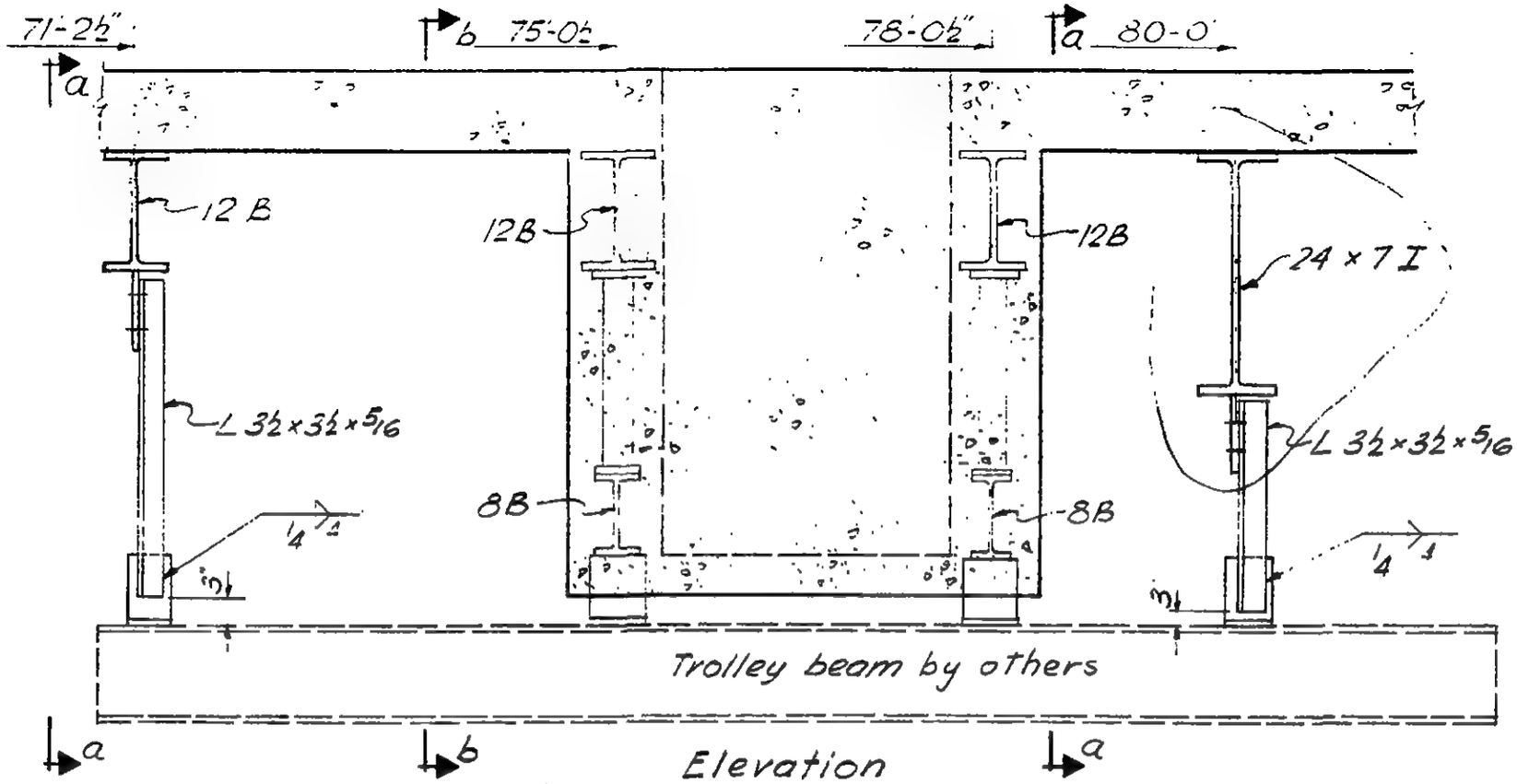

LICENSED PROFESSIONAL ENGINEER LESLIE E. ROBERTSON No. 34360 UNIVERSITY OF THE STATE OF NEW YORK

6-AB2-36

SKILLING - HELLE - CHRISTIANSEN - ROBERTSON Structural & Civil Engineers

PROJECT THE WORLD TRADE CENTER | TITLE PUMP PLATFORM @ 41ST FLOOR | DATE 1-24-68

REVISIONS

3-29-68

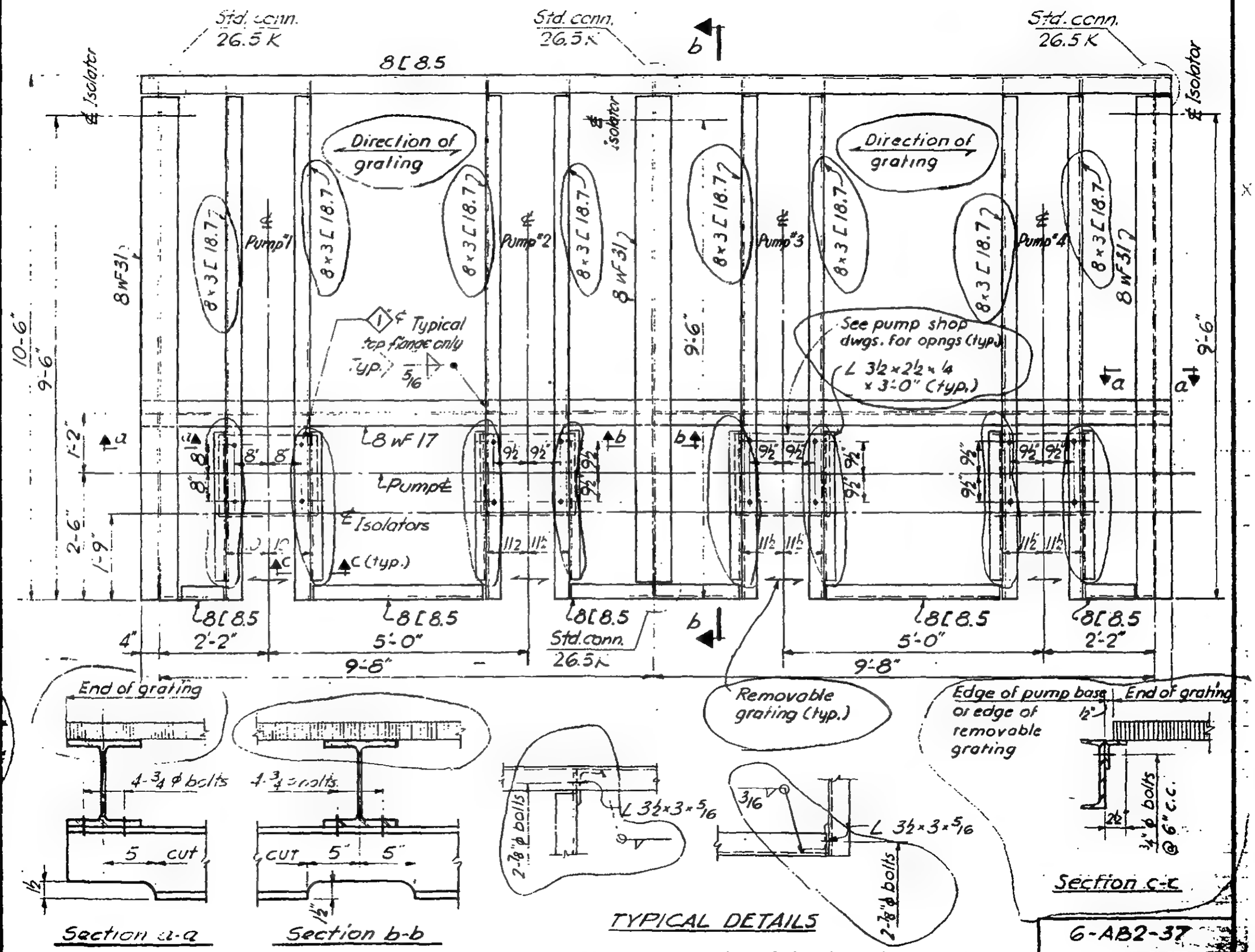

6-AB2-37

LICENSED PROFESSIONAL ENGINEER LESLIE E. ROBERTSON No. 34360 UNIVERSITY OF THE STATE OF NEW YORK

SKILLING - HELLE - CHRISTIANSEN - ROBERTSON Structural & Civil Engineers

PROJECT THE WORLD TRADE CENTER | TITLE PUMP PLATFORM SUPPORT @ 41ST FLOOR | DATE 1-24-68

REVISIONS

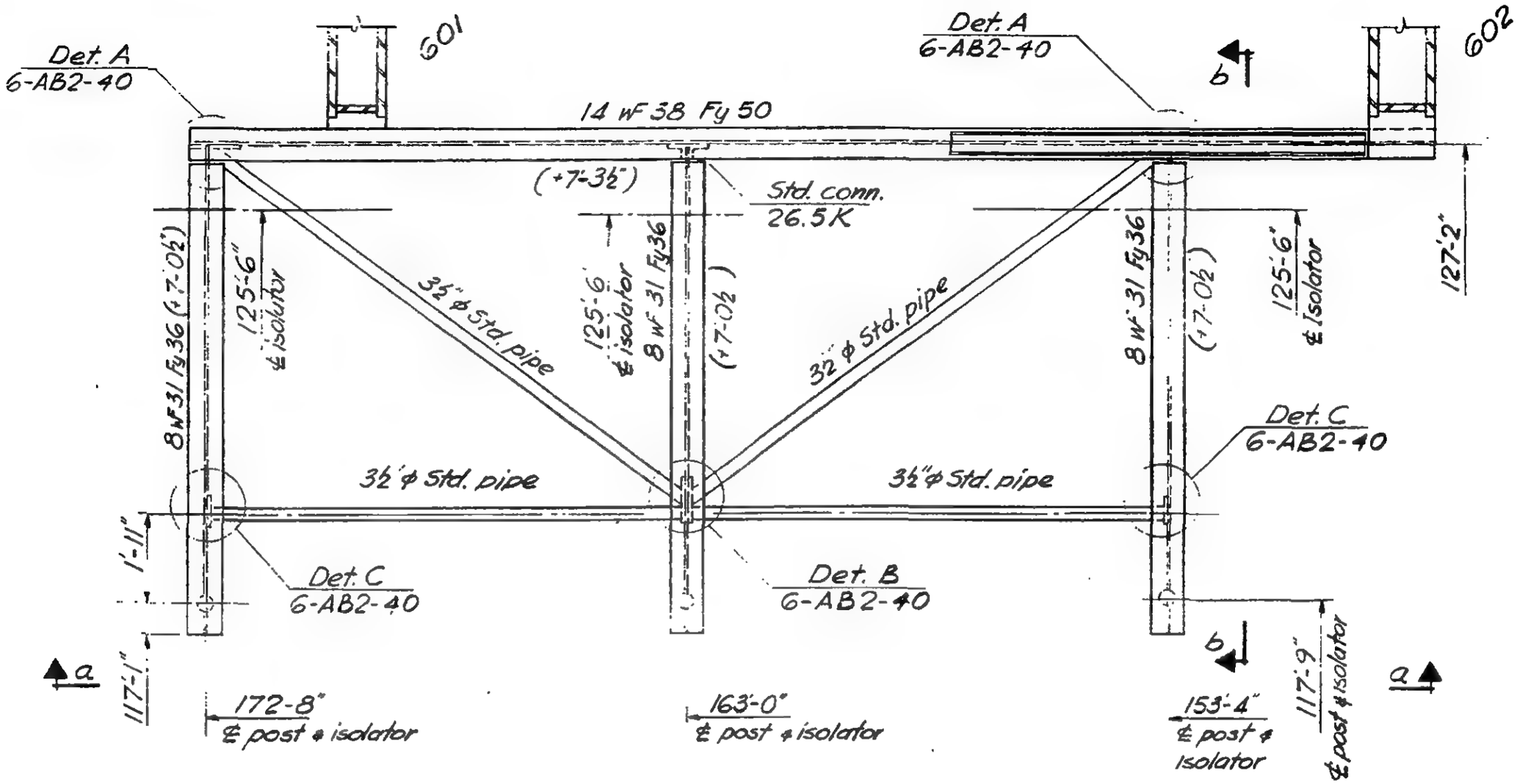

Plan

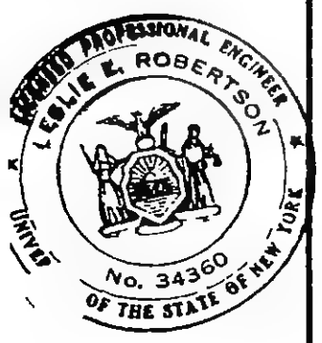

6-AB2-38

SKILLING - HELLE - CHRISTIANSEN - ROBERTSON Structural & Civil Engineers

PROJECT THE WORLD TRADE CENTER | TITLE PUMP PLATFORM SUPPORT @ 41ST FLOOR | DATE 1-24-68

REVISIONS

1-29-68

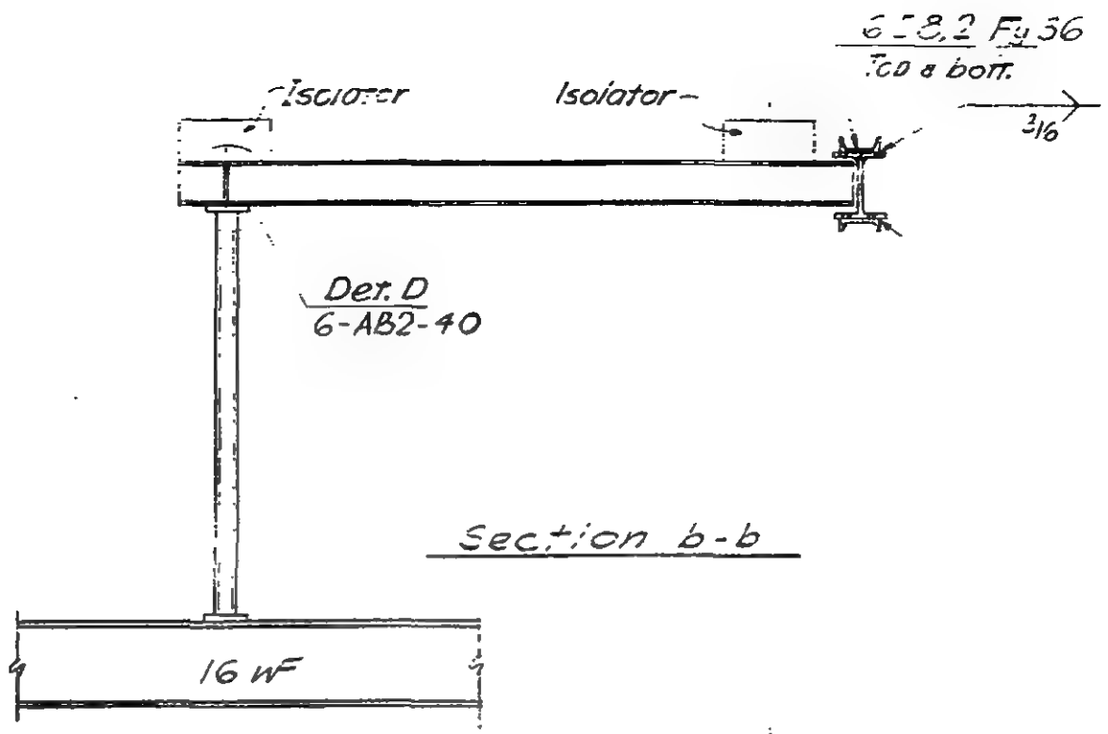

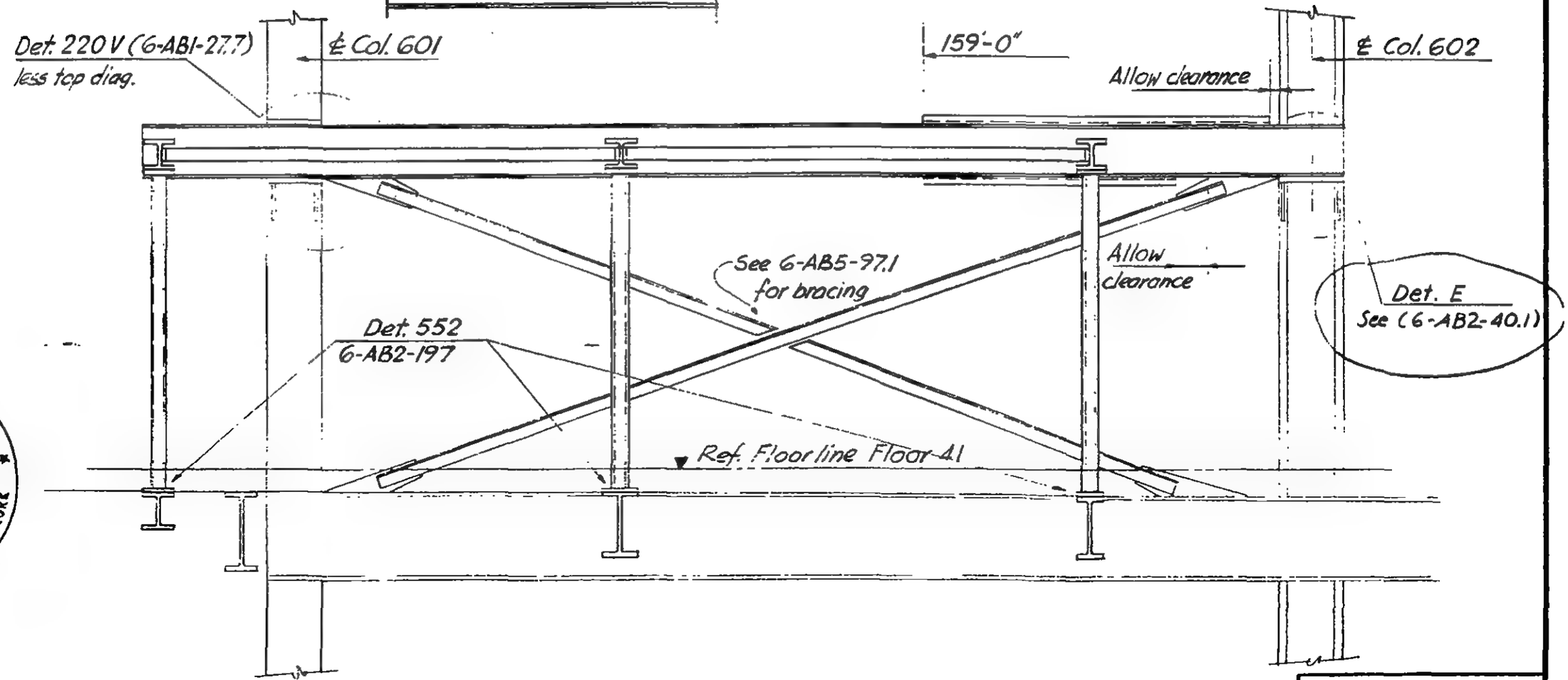

LICENSED PROFESSIONAL ENGINEER
LESLIE E. ROBERTSON
No. 34360
UNIVERSITY OF THE STATE OF NEW YORK

6-AB2-39

SKILLING - HELLE - CHRISTIANSEN - ROBERTSON Structural & Civil Engineers

PROJECT THE WORLD TRADE CENTER | TITLE PUMP PLATFORM SUPPORT DETAILS AT 41 ST. FLOOR | DATE 1-24-68

REVISIONS

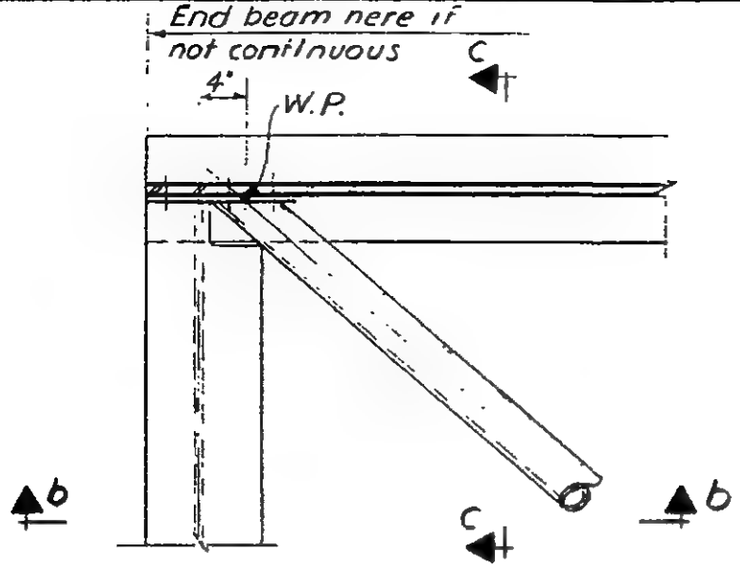

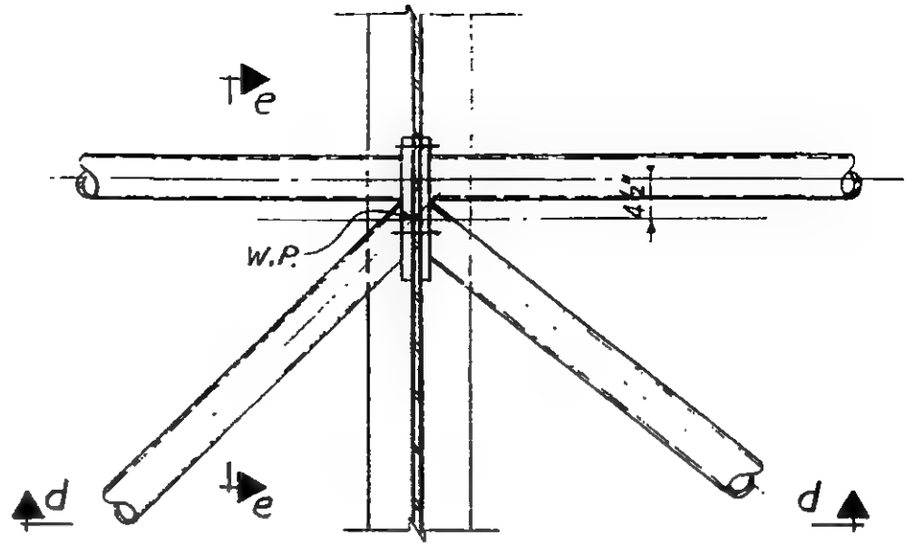

Plan Detail A

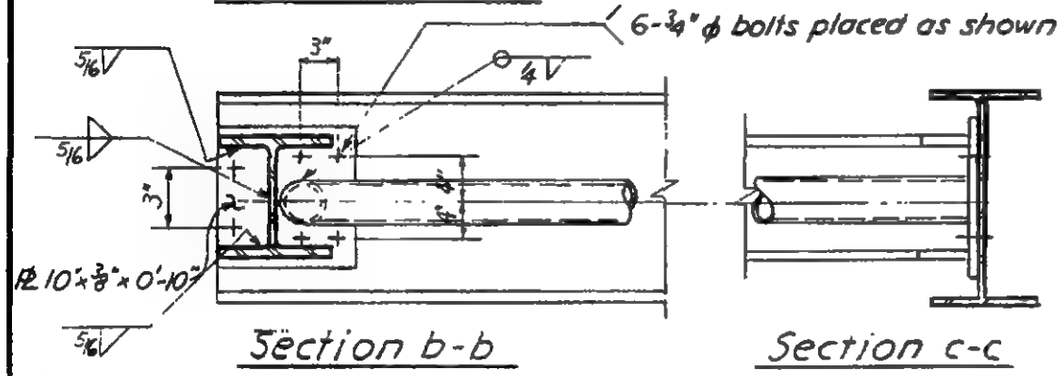

Section b-b

Section c-c

Plan Detail B

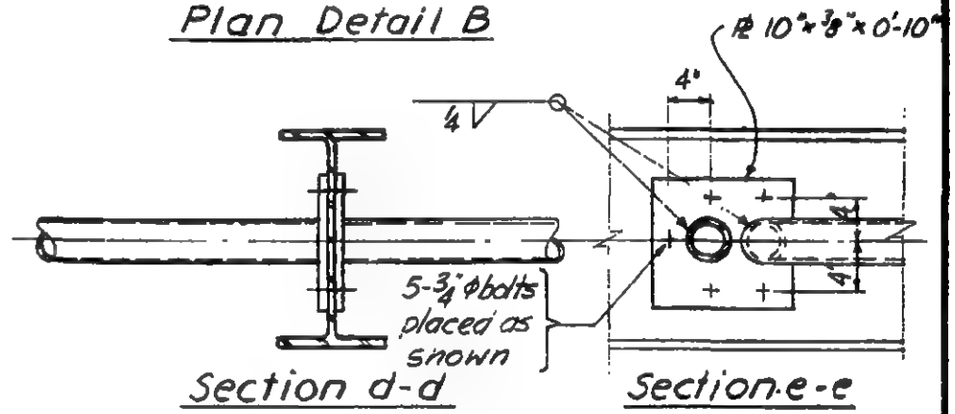

Section d-d

Section e-e

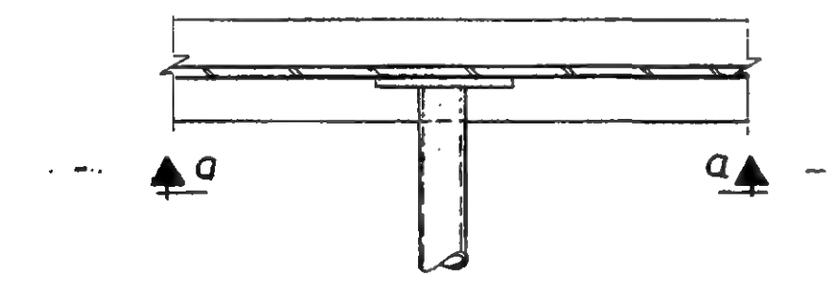

Plan Detail C

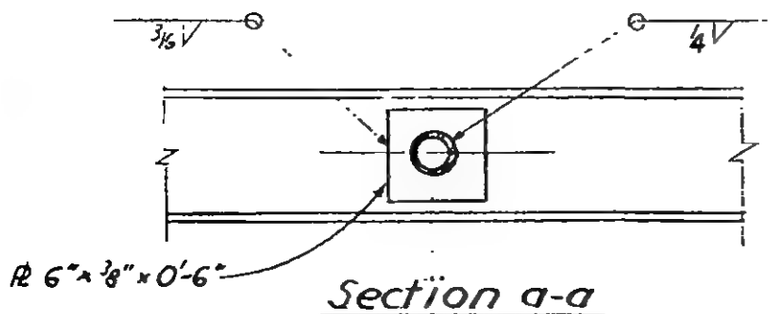

Section a-a

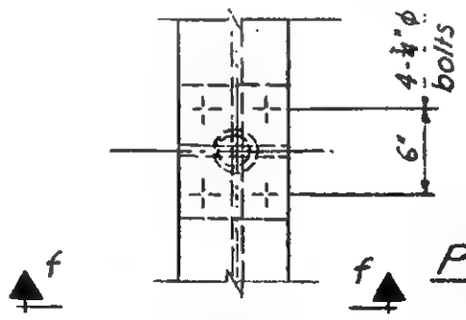

Plan Detail D

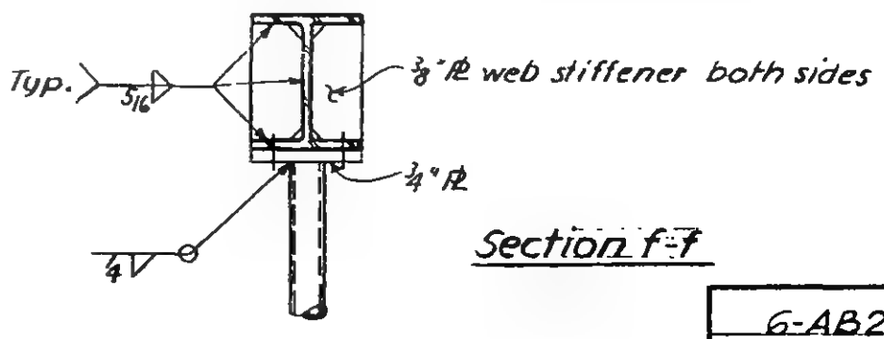

Section f-f

6-AB2-10

LICENSED PROFESSIONAL ENGINEER
LESLIE E. ROBERTSON
No. 34350
UNIVERSITY OF THE STATE OF NEW YORK

SKILLING - HELLE - CHRISTIANSEN - ROBERTSON Structural & Civil Engineers

PROJECT THE WORLD TRADE CENTER | TITLE DETAIL 'E' AT COL. 602, SECONDARY LEVEL ABOVE FL. 41 | DATE 3-29-68

REVISIONS

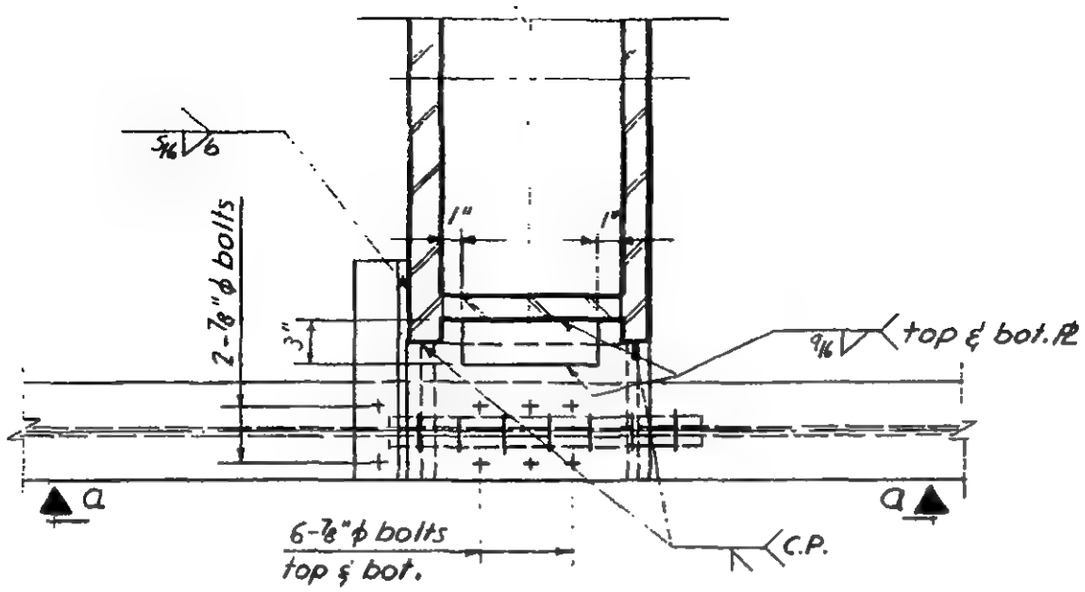

Plan

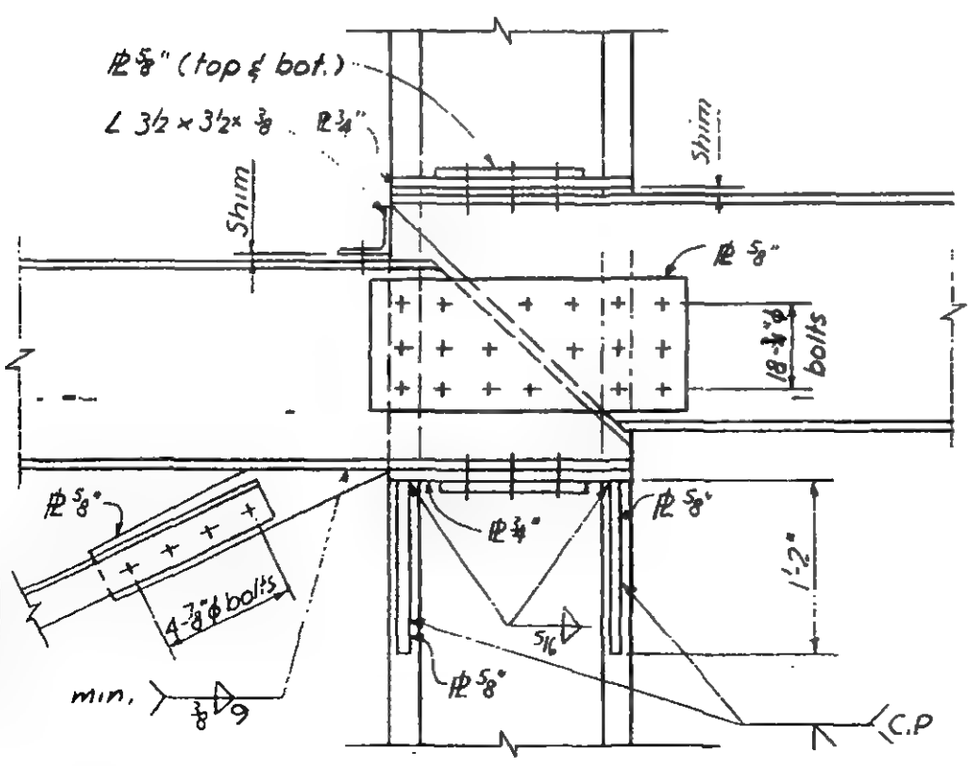

Section a-a

LICENSED PROFESSIONAL ENGINEER
LESLIE E. ROBERTSON
NO. 34360
UNIVERSITY OF THE STATE OF NEW YORK

6-AB2-40.1

SKILLING - HELLE - CHRISTIANSEN - ROBERTSON Structural & Civil Engineers

PROJECT THE WORLD TRADE CENTER | TITLE PUMP PLATFORM EL.294 TOWER B | DATE 2-12-68

REVISIONS
-11-68

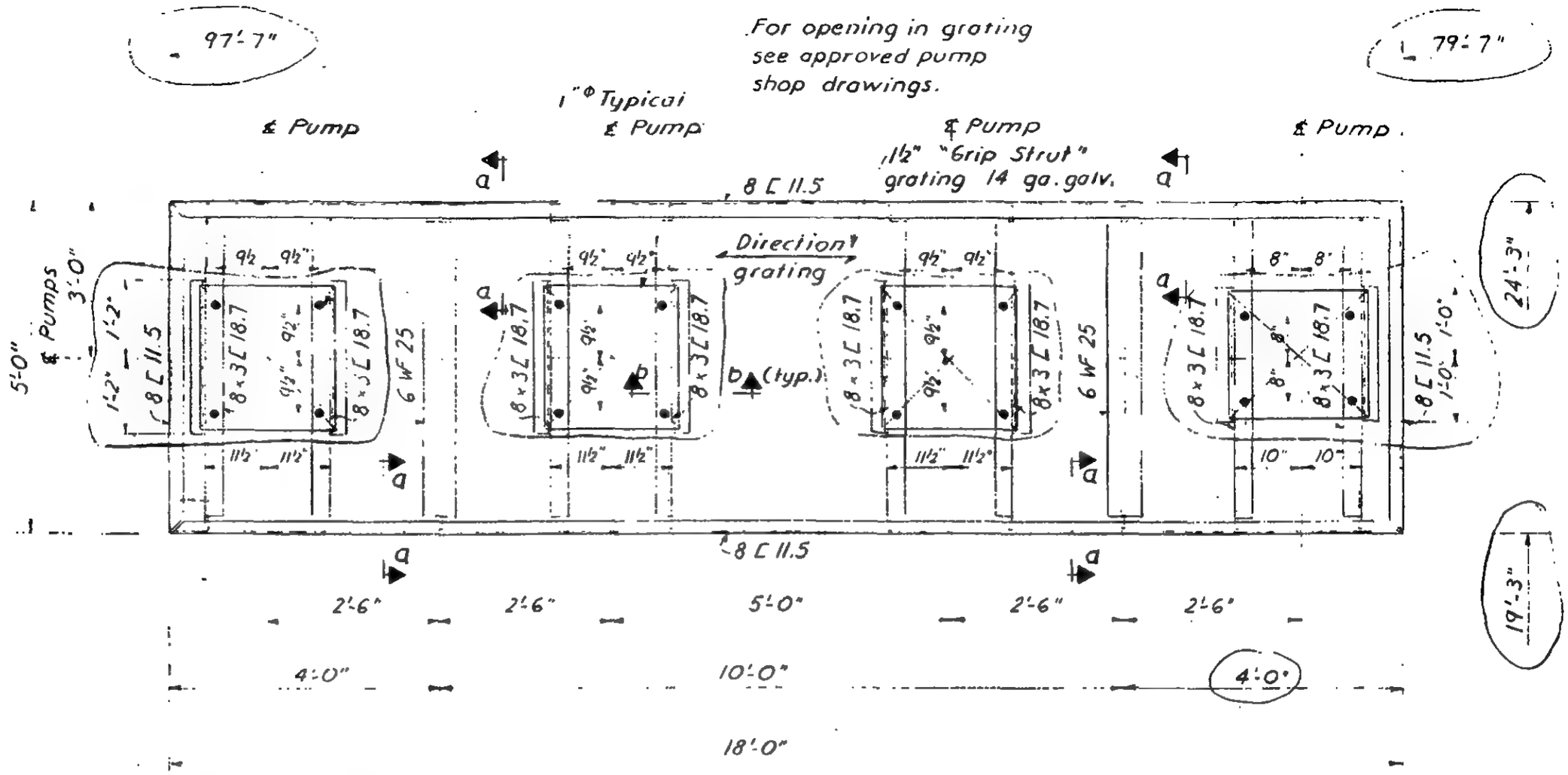

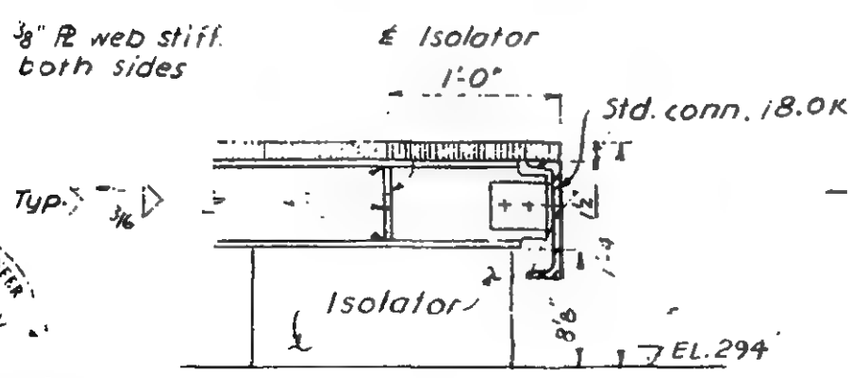

Section a-a

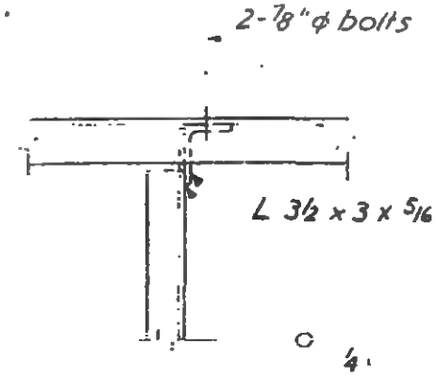

Typical Details

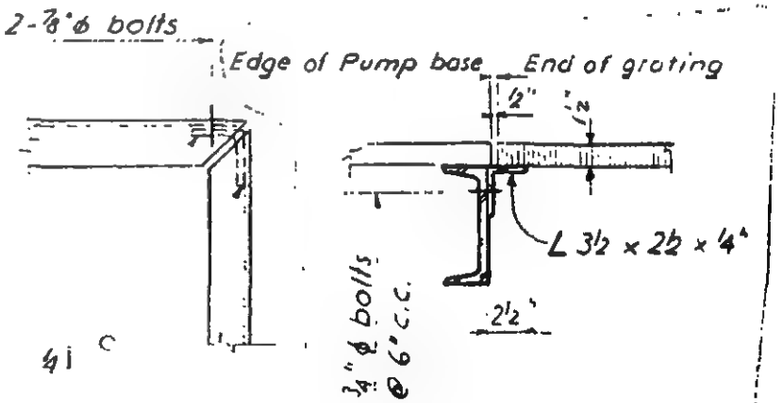

Section b-b

LICENSED PROFESSIONAL ENGINEER
LESLIE E. ROBERTSON
No. 34[illegible]0
UNIVERSITY OF THE STATE OF NEW YORK

6-AB2-41

SKILLING - HELLE - CHRISTIANSEN - ROBERTSON Structural & Civil Engineers

PROJECT THE WORLD TRADE CENTER | TITLE PUMP PLATFORM AT 75TH FLOOR | DATE 2-21-68

REVISIONS
- 29 -68

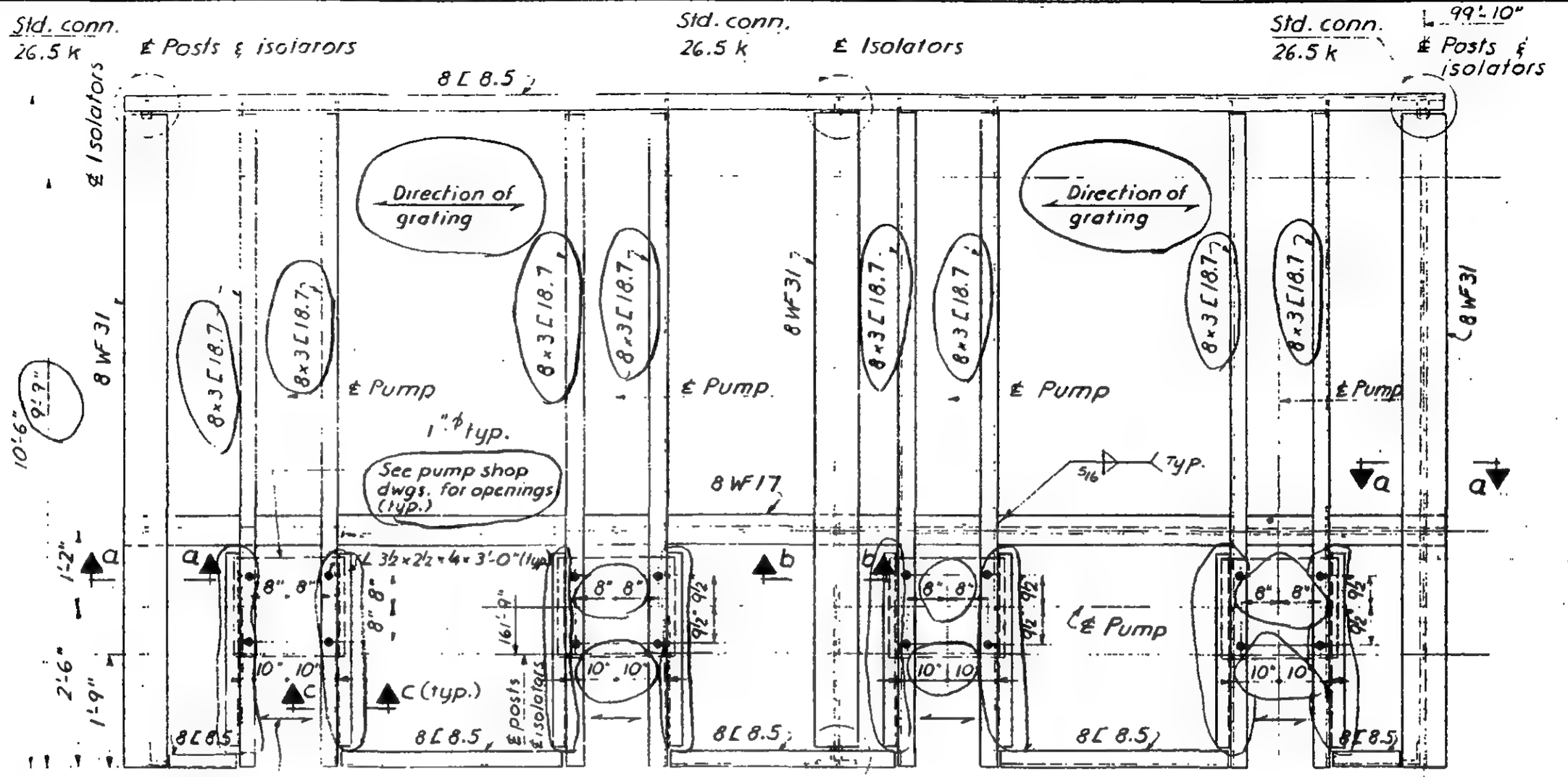

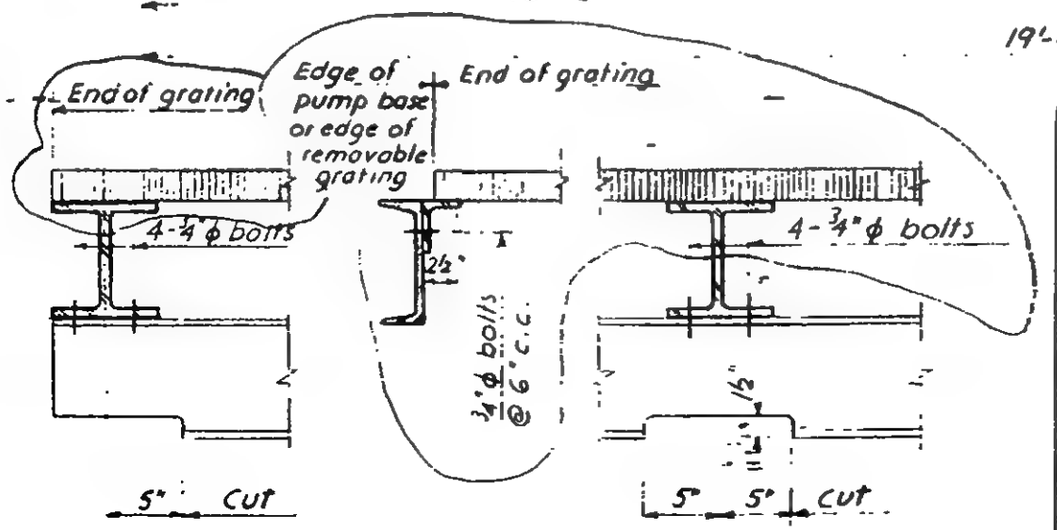

Section a-a Section c-c Section b-b

Std. conn. 26.5 K

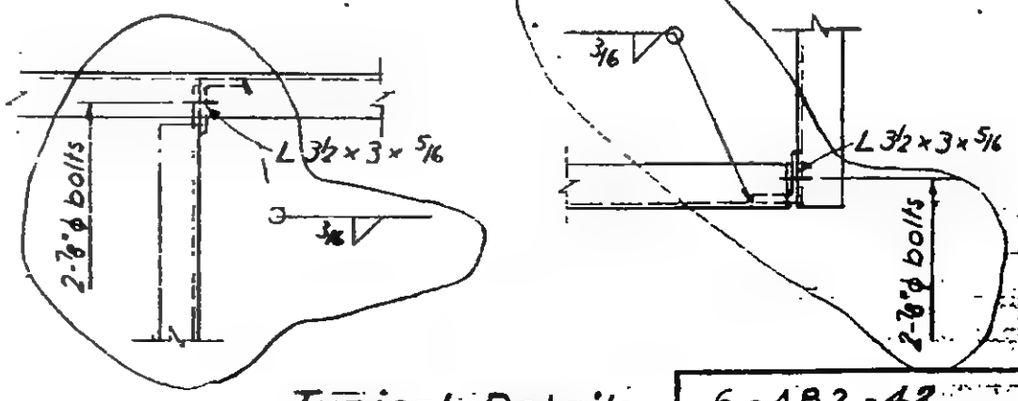

Typical Details

6-AB2-42

LICENSED PROFESSIONAL ENG. NO. LESLIE E. ROBERTSON No. 34360 UNIVERSITY OF THE STATE OF NEW YORK

SKILLING - HELLE - CHRISTIANSEN - ROBERTSON Structural & Civil Engineers

PROJECT THE WORLD TRADE CENTER | TITLE PUMP PLATFORM SUPPORT @ 75TH FLOOR | DATE 2-21-68

REVISIONS

1 3-29-68

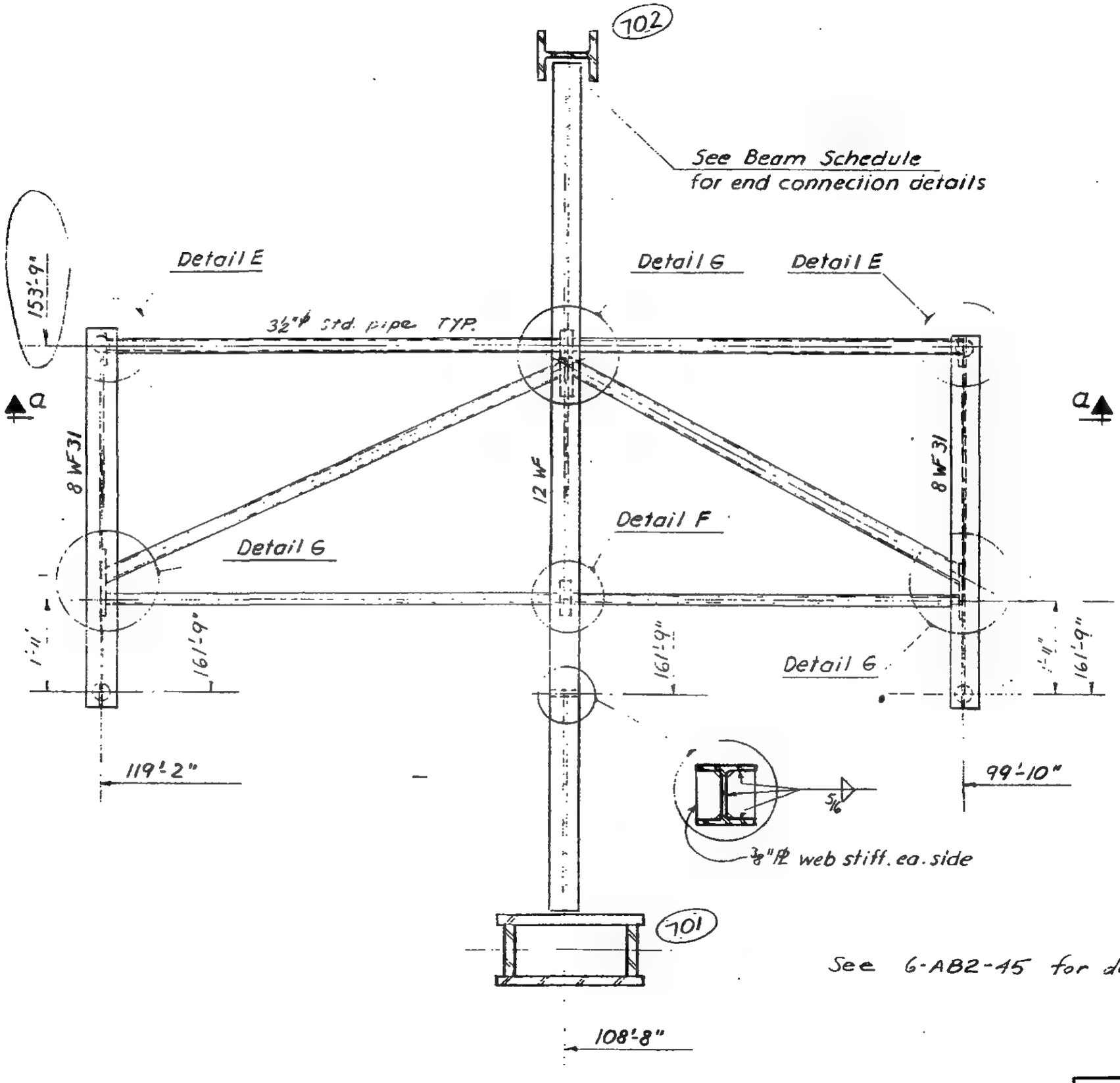

See 6-AB2-45 for details E, F & G

LICENSED PROFESSIONAL ENGINEER
LESLIE E. ROBERTSON
No. 34360
UNIVERSITY OF THE STATE OF NEW YORK

6-AB2-43

SKILLING - HELLE - CHRISTIANSEN - ROBERTSON Structural & Civil Engineers

PROJECT THE WORLD TRADE CENTER | TITLE PUMP PLATFORM SUPPORT @ 75TH. FLOOR | DATE 2-21-68

REVISIONS

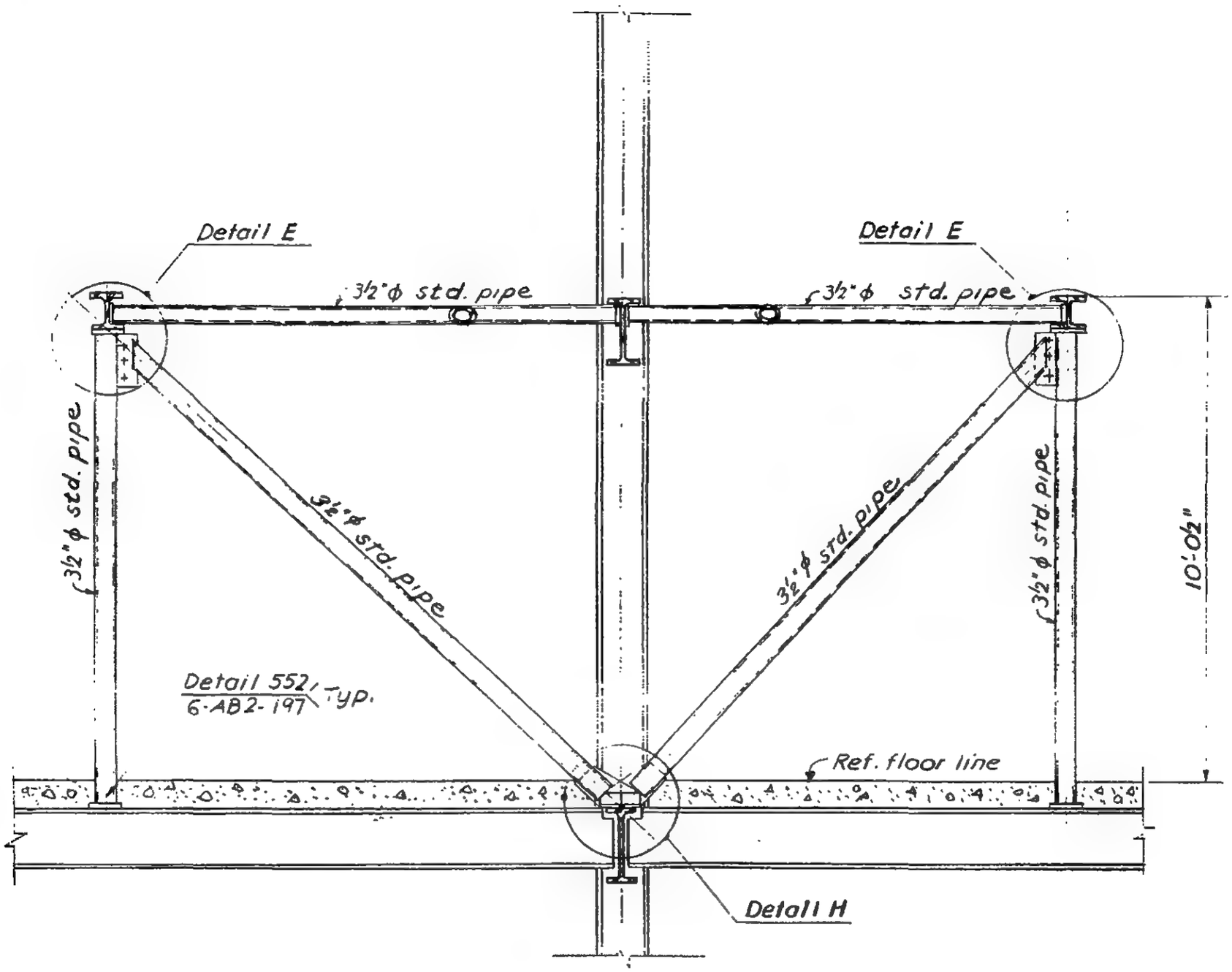

see 6-AB2-45 for details E & H

Section a-a

6-AB2-44

SKILLING - HELLE - CHRISTIANSEN - ROBERTSON Structural & Civil Engineers

PROJECT THE WORLD TRADE CENTER | TITLE PUMP PLATFORM TROLLEY SUPPORT - DETAILS | DATE 2-21-68

REVISIONS

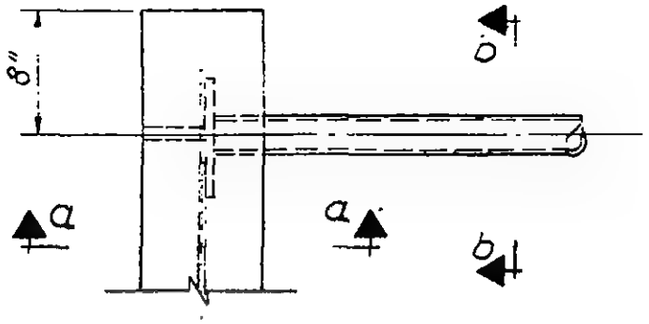

Detail E

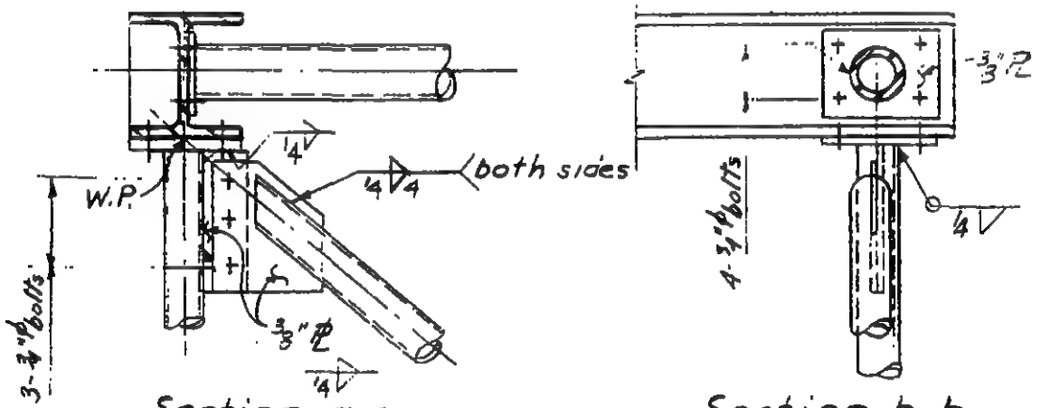

Section a-a Section b-b

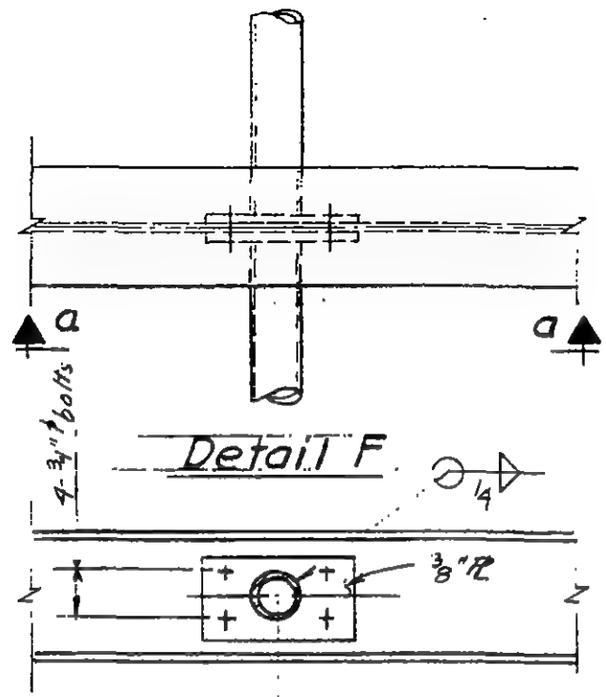

Detail F

Section a-a

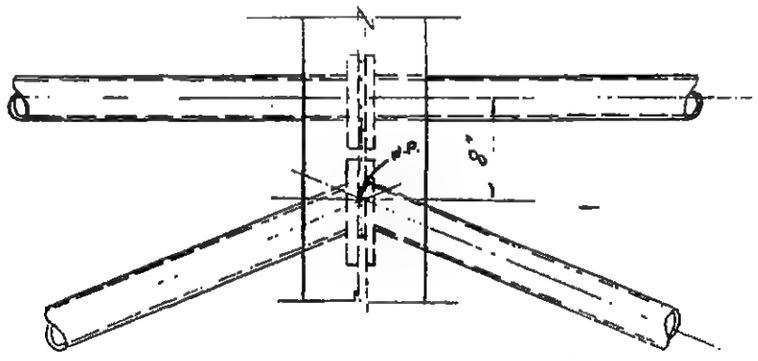

Detail G

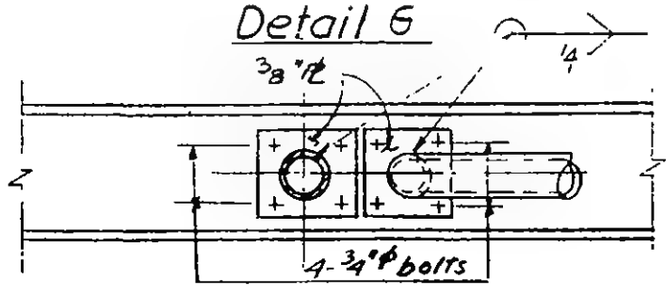

Section a-a

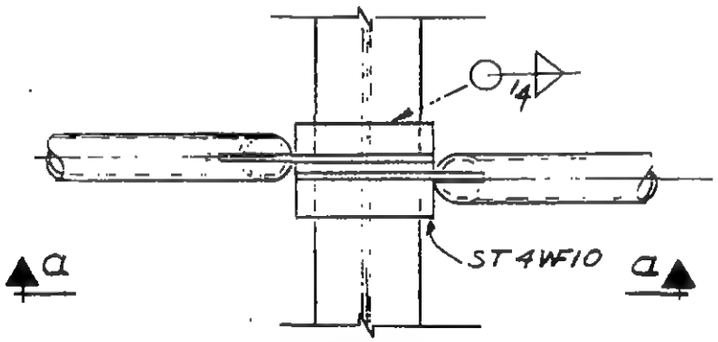

Detail H

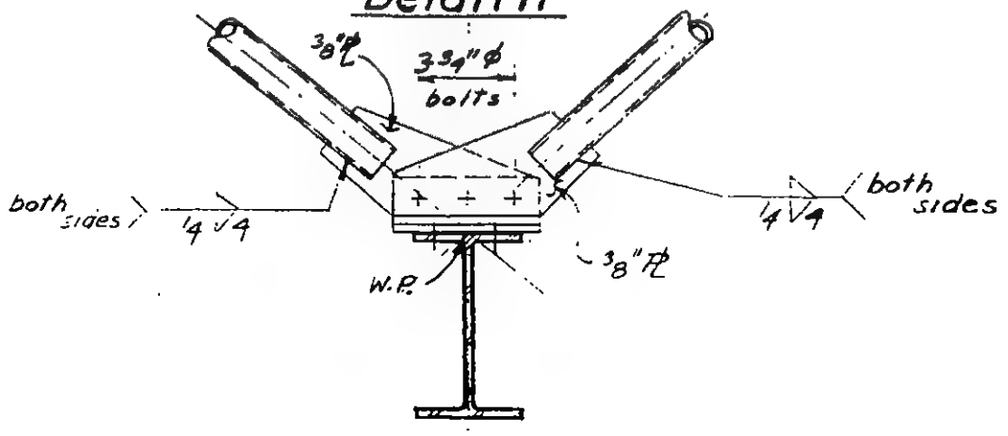

Section a-a

6-AB2-45

LICENSED PROFESSIONAL ENGINEER
LESLIE E. ROBERTSON
No. 34360
UNIVERSITY OF THE STATE OF NEW YORK

SKILLING - HELLE - CHRISTIANSEN - ROBERTSON Structural & Civil Engineers

PROJECT THE WORLD TRADE CENTER | TITLE PUMP PLATFORM TROLLEY SUPPORT | DATE 2-21-68

REVISIONS

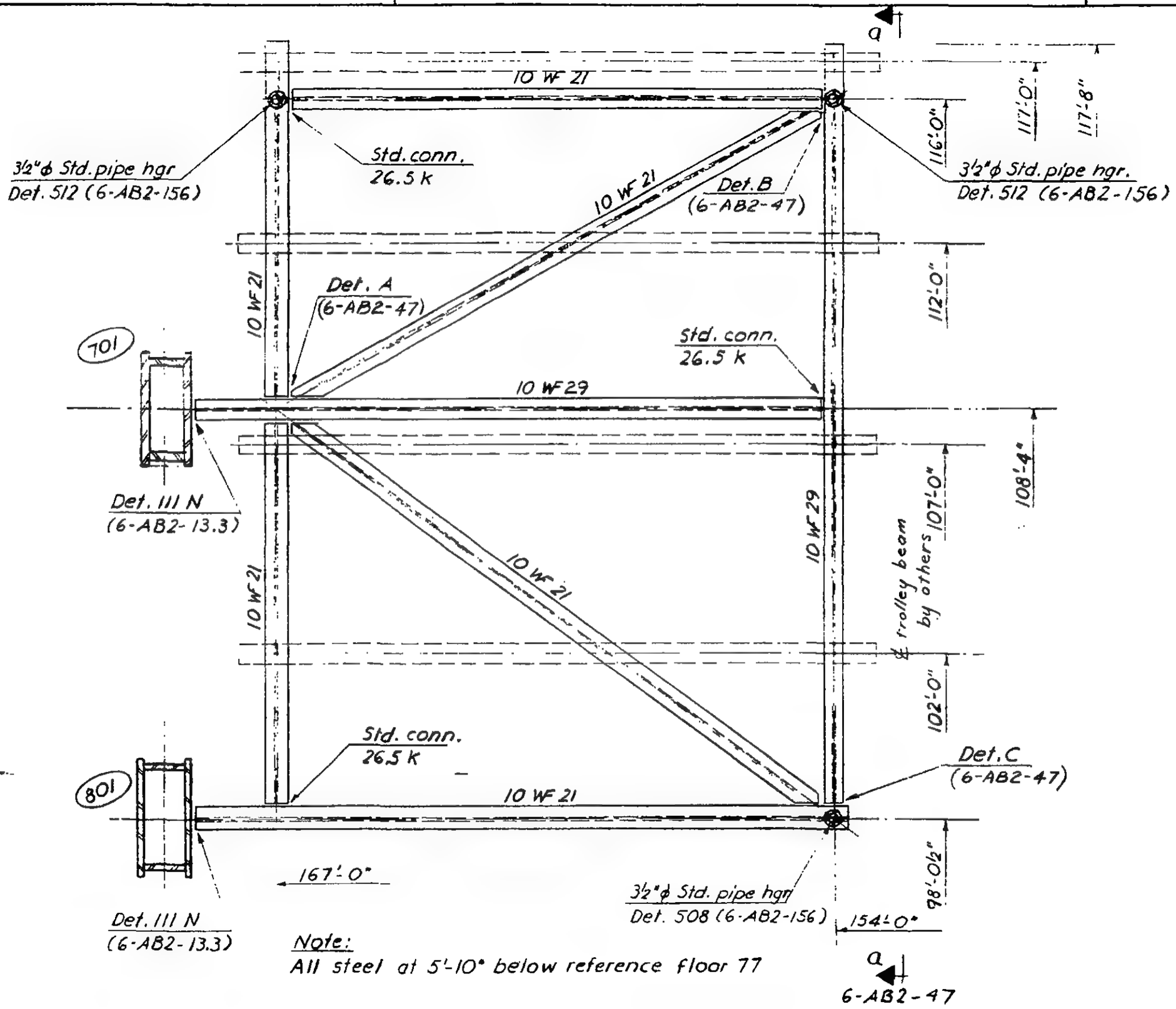

Note:
All steel at 5'-10" below reference floor 77

LICENSED PROFESSIONAL ENGINEER
LESLIE E. ROBERTSON
No. 34360
UNIVERSITY OF THE STATE OF NEW YORK

6-AB2-46

SKILLING - HELLE - CHRISTIANSEN - ROBERTSON Structural & Civil Engineers

PROJECT THE WORLD TRADE CENTER | TITLE PUMP PLATFORM TROLLEY SUPPORT | DATE 2-21-68

REVISIONS

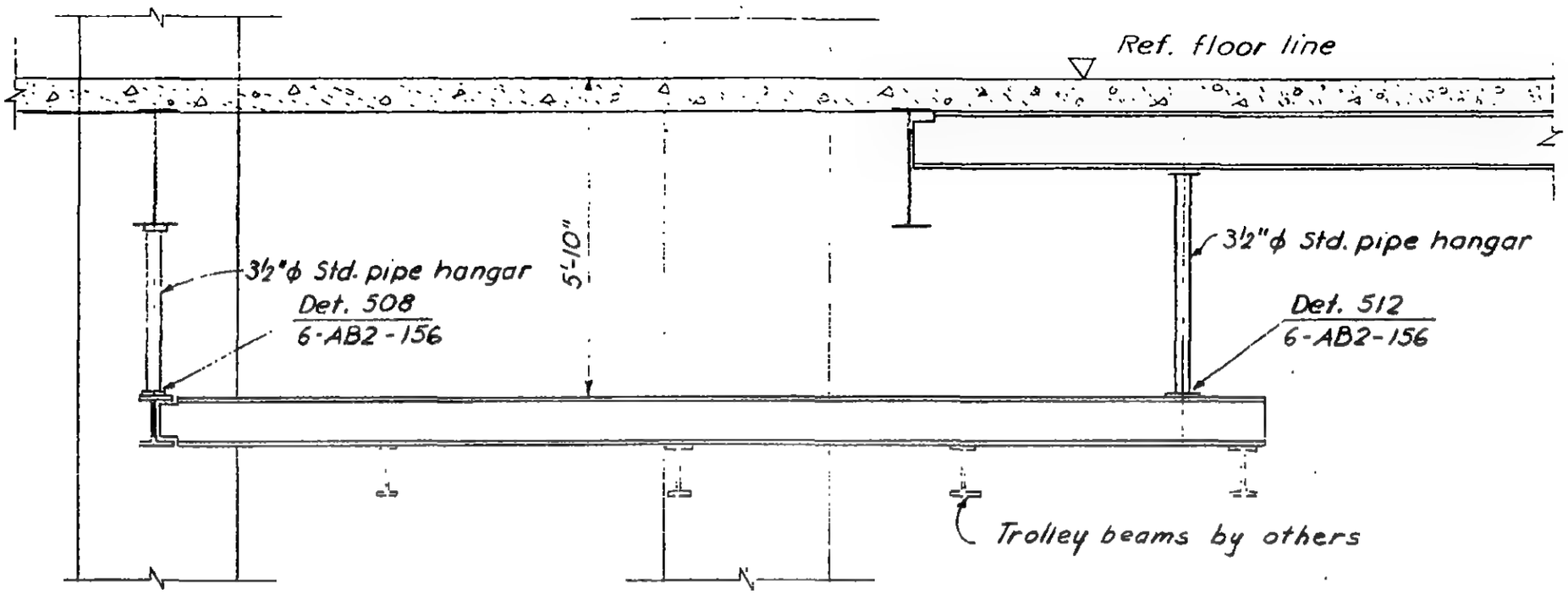

Section a-a

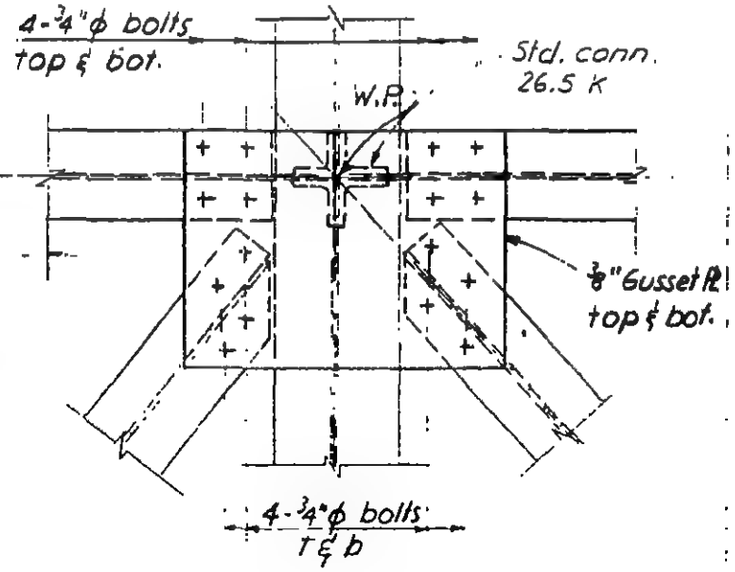

Detail A

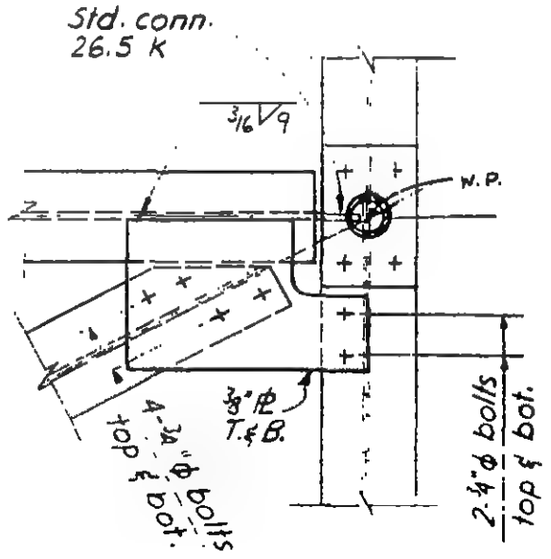

Detail B

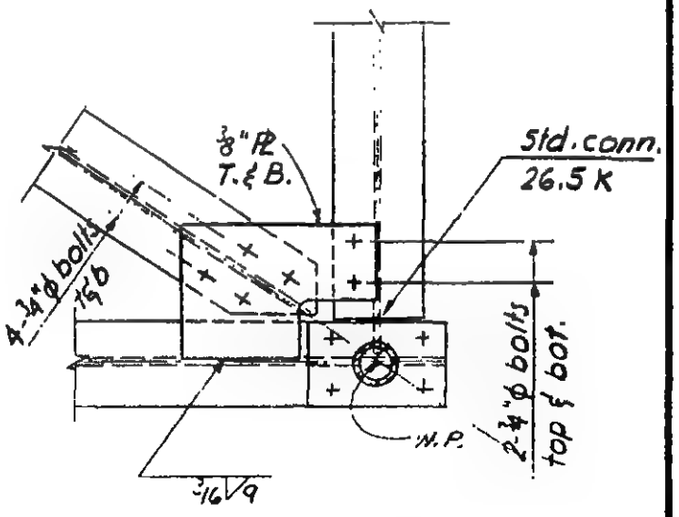

Detail C

6-AB2-47

LICENSED PROFESSIONAL ENGINEER LESLIE E. ROBERTSON No. 34360 STATE OF NEW YORK

SKILLING - HELLE - CHRISTIANSEN - ROBERTSON Structural & Civil Engineers

PROJECT THE WORLD TRADE CENTER | TITLE CONNECTION DETAILS 150-153 | DATE 5-22-67

REVISIONS

11-21-67

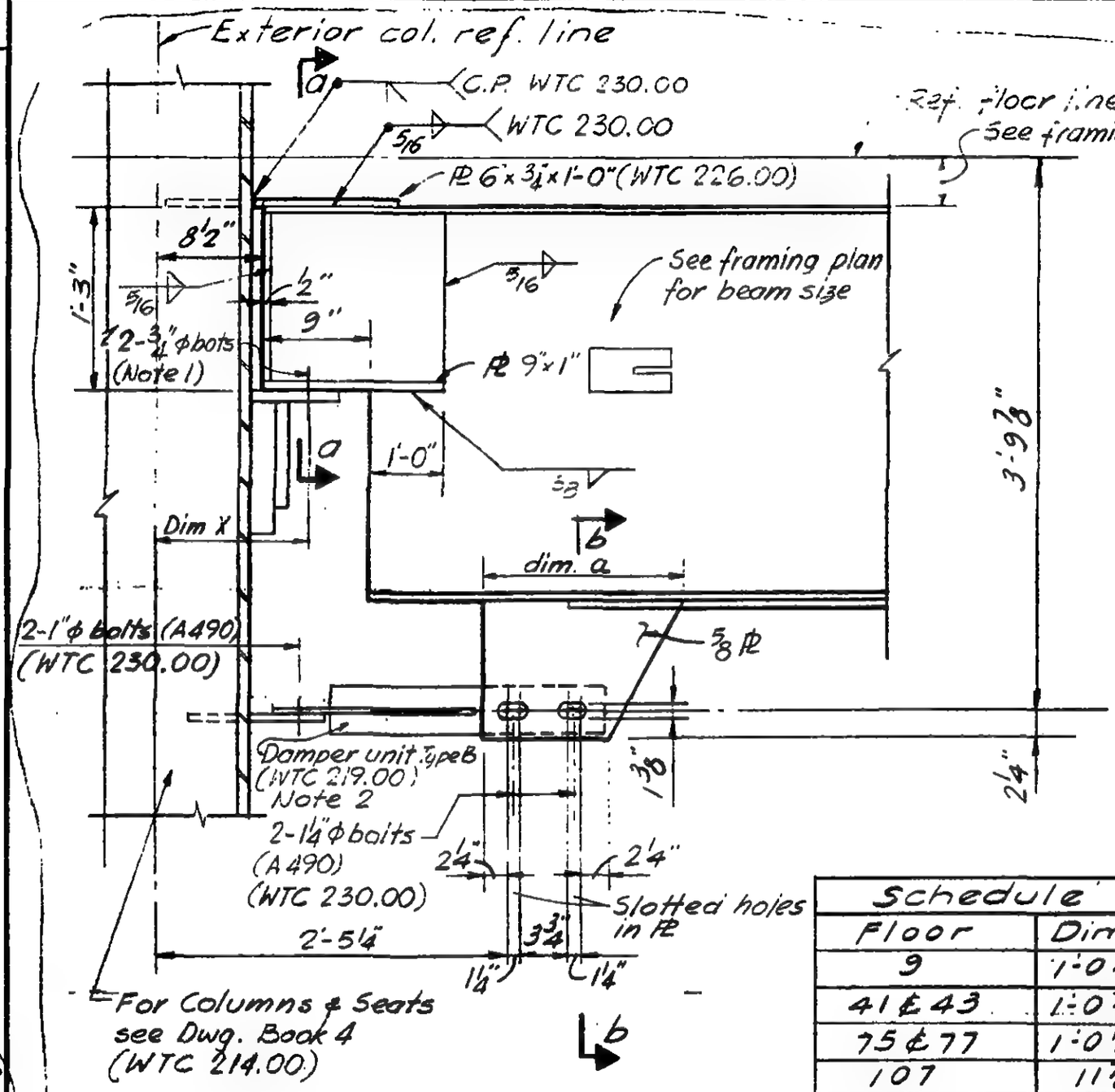

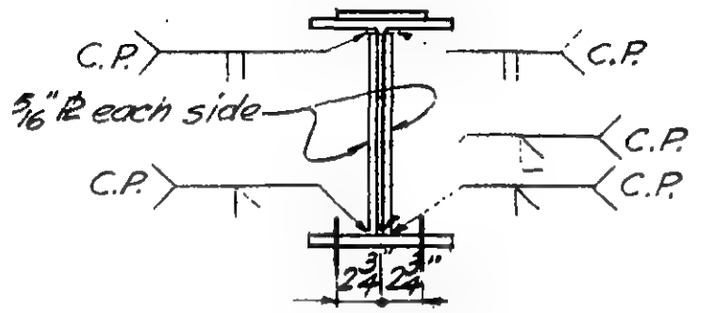

Section a-a

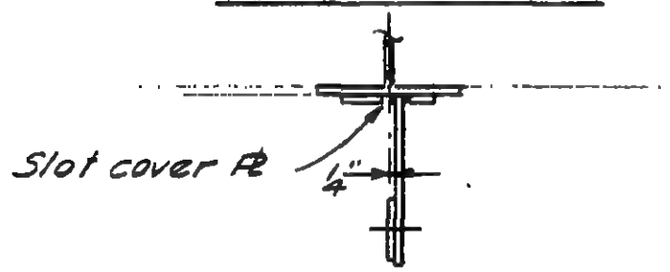

Section b-b

Schedule	
Floor	Dim "X"
9	1'-0 3/8"
41 & 43	1'-0 7/16"
75 & 77	1'-0 1/16"
107	11 3/8"

DETAIL	DIM. a
150	11"
151	1'-1"
152	1'-4"
153	1'-6"

Note: 1. (Bolts by WTC 230.00) Bolts to be A 307 or A 325 hand tightened. If A 325 are tourqued loosen after top PL is welded & before concrete is cast.

Note: 2. Damping unit to be installed after slab has been cast.

LICENSED PROFESSIONAL ENGINEER LESLIE E. ROBERTSON No. 13436 STATE OF NEW YORK

6-AB2-52

SKILLING - HELLE - CHRISTIANSEN - ROBERTSON Structural & Civil Engineers

PROJECT THE WORLD TRADE CENTER | TITLE CONNECTION DETAIL 154 | DATE 6-5-67

REVISIONS

11-21-67

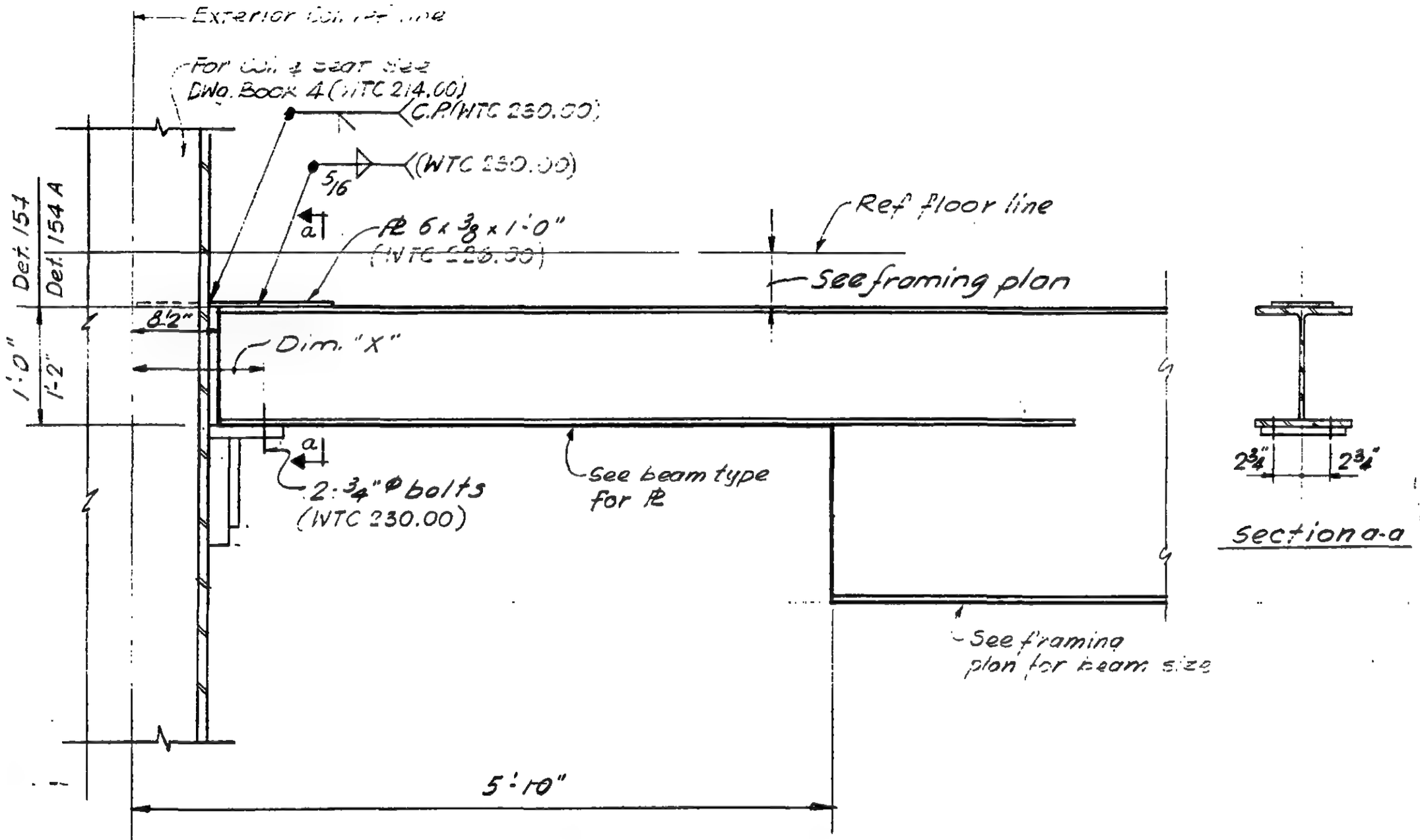

Schedule	
Floors	Dim "X"
44, 46, 47, 48	1-0 3/8"
49	1-0 5/16"
78, 80, 83	11 15/16"

LICENSED PROFESSIONAL ENGINEER LESLIE E. ROBERTSON No. 34360 UNIVERSITY OF THE STATE OF N.Y.

6-AB2-53

SKILLING - HELLE - CHRISTIANSEN - ROBERTSON Structural & Civil Engineers

PROJECT THE WORLD TRADE CENTER | TITLE CONNECTION DETAIL 155-158 | DATE 5-22-67

REVISIONS

11-21-67

			Dimension X			
Detail	Dim "a"	Dim "b"	FLR 9	FLRS 41 & 43	FLRS 75 & 77	FLR 107
155	1-6½	1-6	1-0 7/8	1-0 7/16	1-0 1/16	0-11 7/8
156A	1-4½	1-8	1-0 7/8	1-0 7/16	1-0 1/16	0-11 7/8
156B	1-4½	1-8	0-10 7/8	0-10 7/16	0-10 1/16	0-9 7/8
157	1-2½	1-10	0-10 7/8	0-10 7/16	0-10 1/16	0-9 7/8
158	1-0½	See Note	0-10 7/8	0-10 7/16	0-10 1/16	0-9 7/8

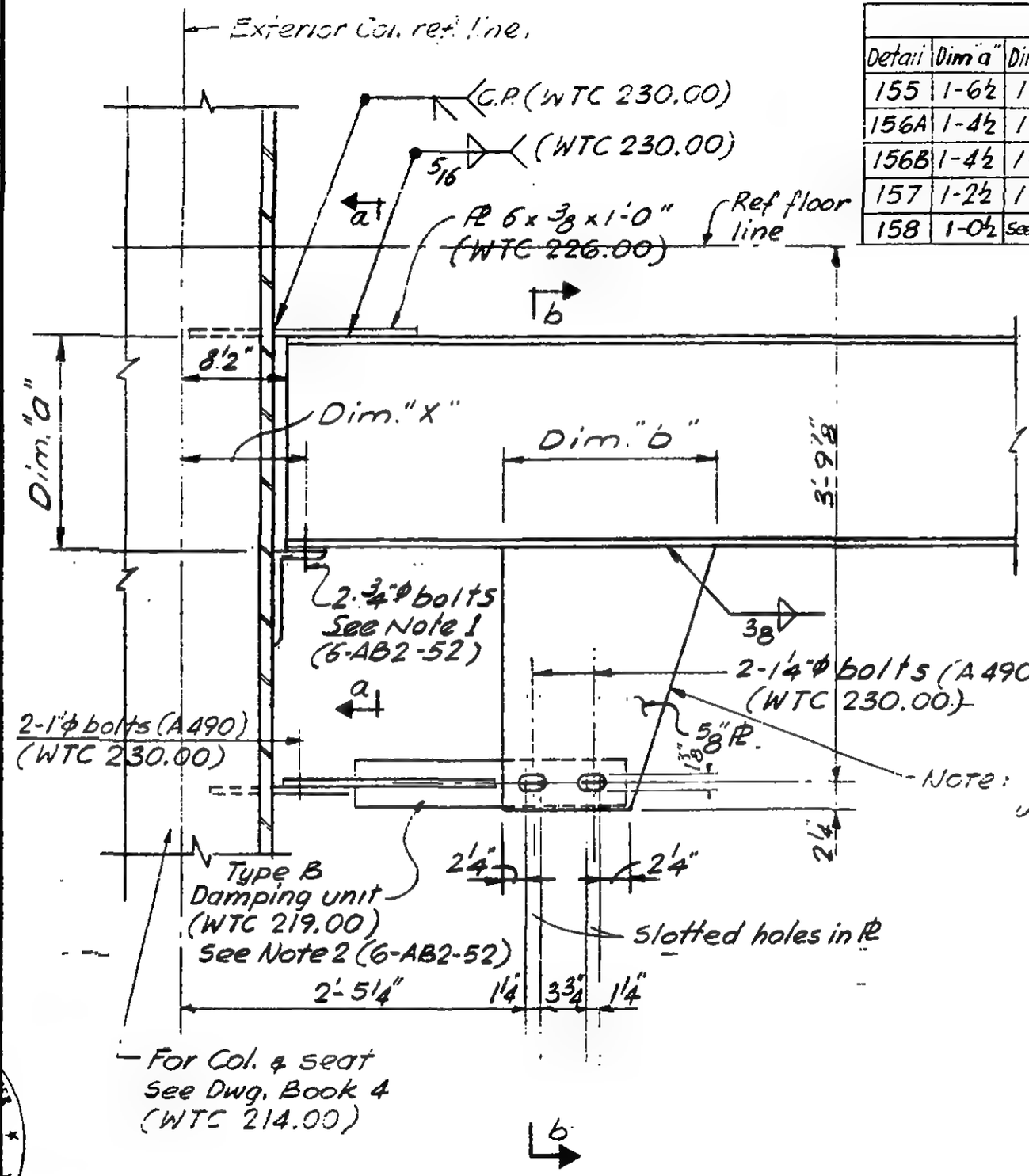

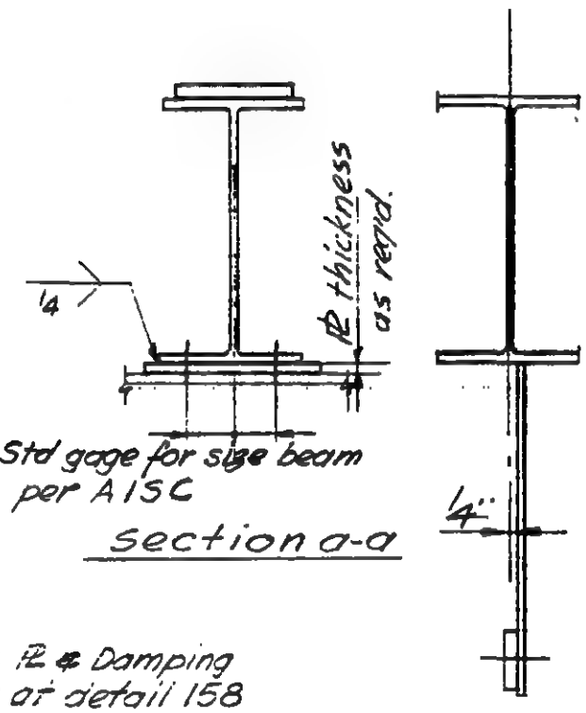

Section b-b

LICENSED PROFESSIONAL ENG. LESLIE E. ROBERTSON No. 34360 UNIVERSITY OF THE STATE OF NEW YORK

6-AB2-54

SKILLING - HELLE - CHRISTIANSEN - ROBERTSON Structural & Civil Engineers

PROJECT THE WORLD TRADE CENTER | TITLE CONNECTION DETAIL 159 - 160 | DATE 11-21-67

REVISIONS

12-21-67

8-29-68

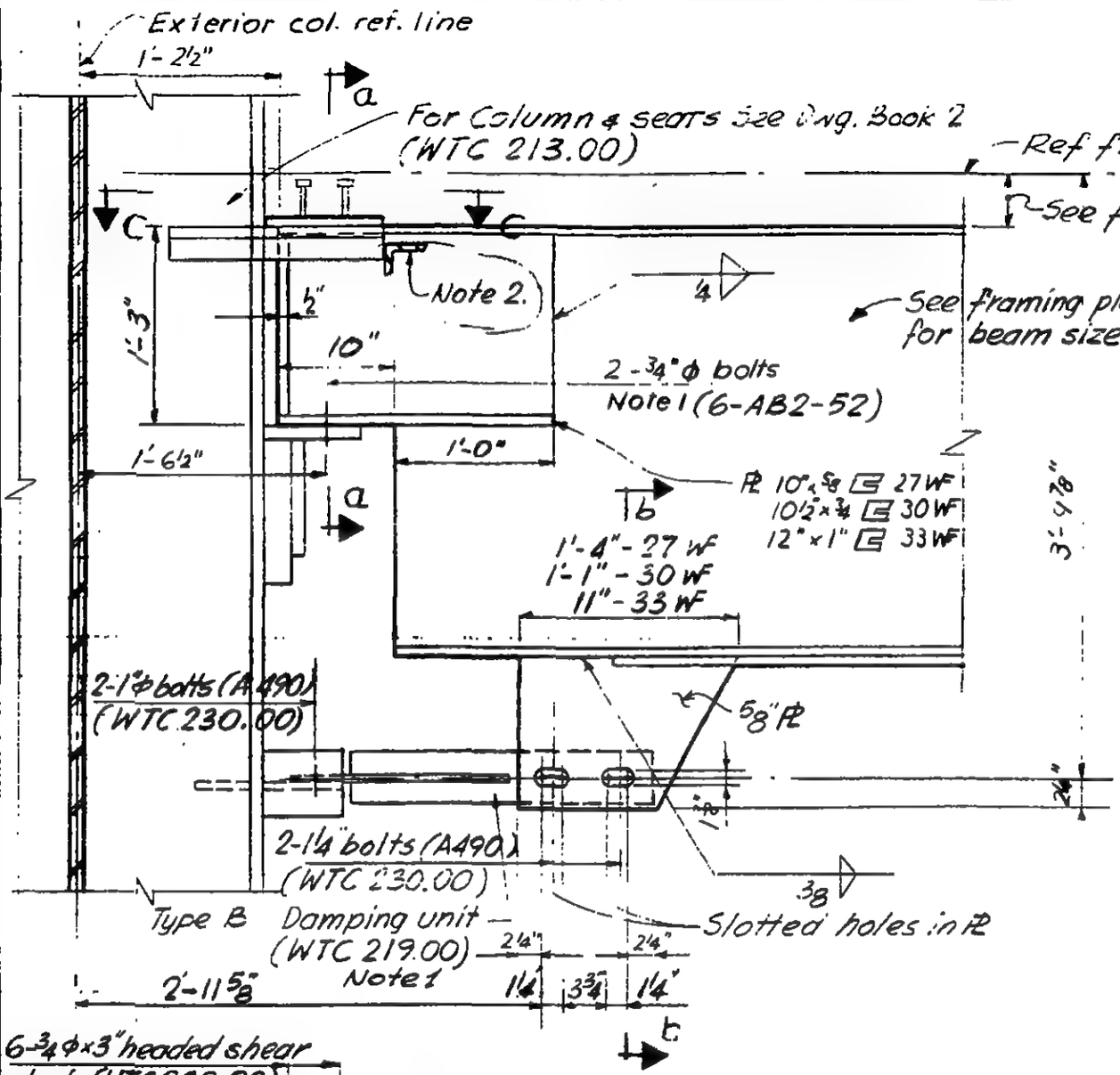

Plan Section C-C

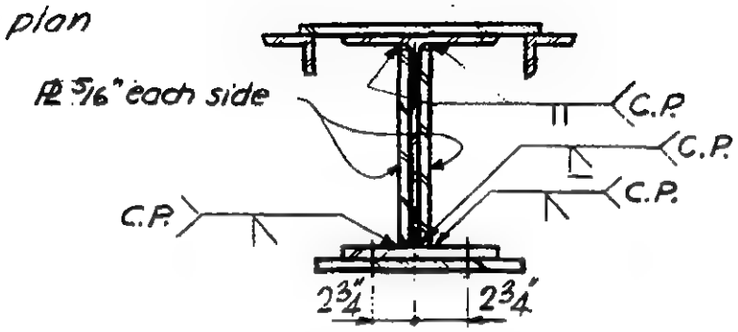

Section a-a

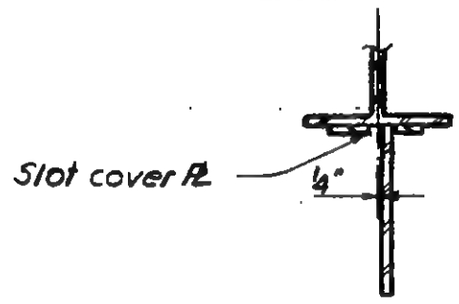

Section b-b

Note: 1. Damping unit to be installed after slab has been cast.
2. Dack shelf L 3x2 for details, see Det. WW 6-AB3-25.

6-AB2-55

SKILLING - HELLE - CHRISTIANSEN - ROBERTSON Structural & Civil Engineers

PROJECT THE WORLD TRADE CENTER | TITLE CONNECTION DETAIL 161, 161A | DATE 11-21-67

REVISIONS

12-20-67
8-29-68

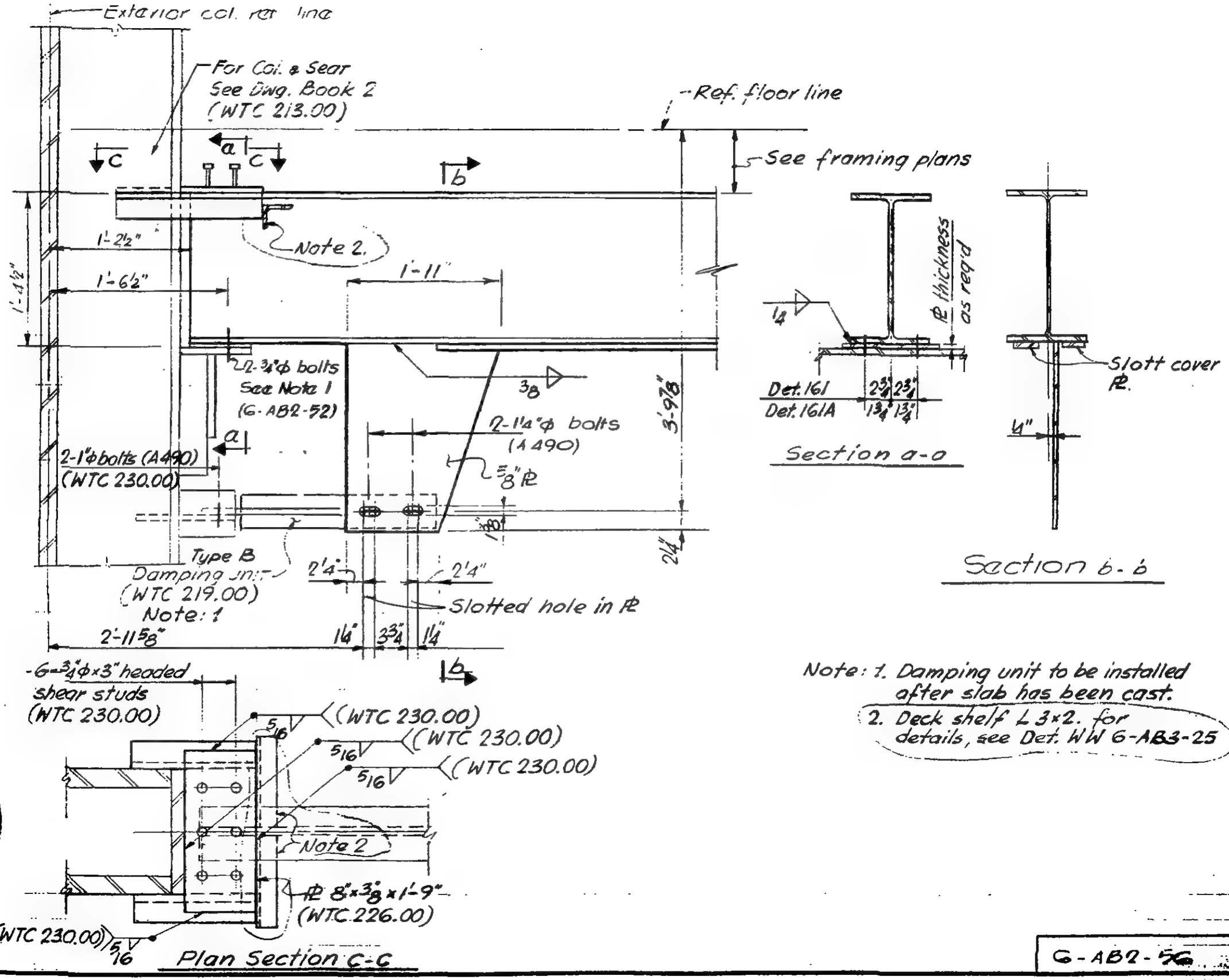

Note: 1. Damping unit to be installed after slab has been cast.

2. Deck shelf L 3×2. for details, see Det. WW 6-AB3-25

LICENSED PROFESSIONAL ENG'R LESLIE E. ROBERTS No. 34360 STATE OF NEW YORK

G-AB2-56

SKILLING - HELLE - CHRISTIANSEN - ROBERTSON Structural & Civil Engineers

PROJECT THE WORLD TRADE CENTER | TITLE CONNECTION DETAIL 162 & 166 A - D | DATE 11-21-67

REVISIONS

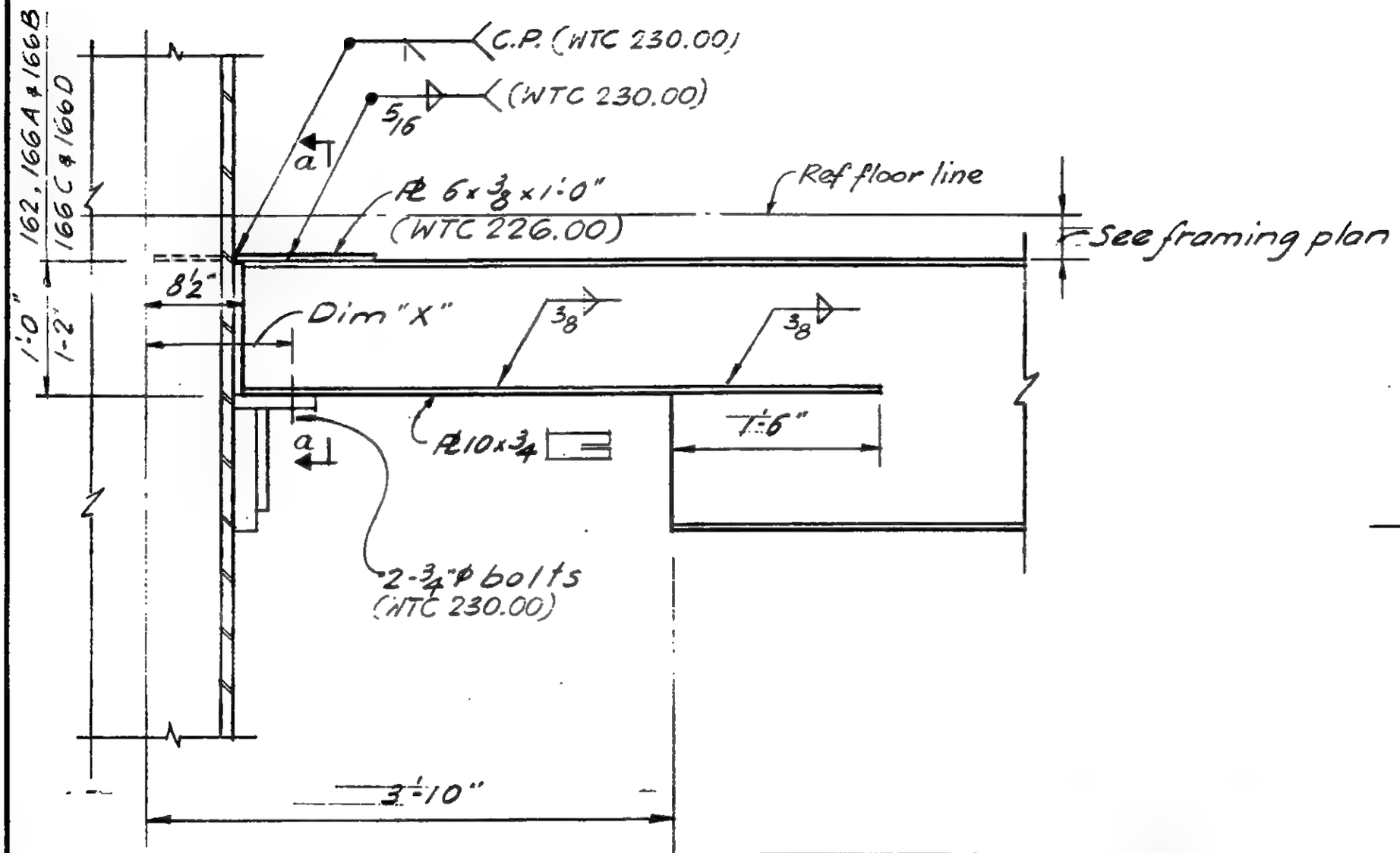

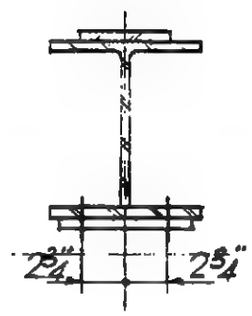

Section a-a

Schedule Det. 166		
Floor	Dim. X" (166 A & C)	Dim. X" (166 B & D)
44, 46, 47, 48	1'-0 3/8"	10 3/8"
49	1'-0 5/16"	10 5/16"
78, 80 - 83	11 15/16"	9 15/16"

LICENSED PROFESSIONAL ENGINEER
LESLIE E. ROBERTSON
No. 34360
UNIVERSITY OF THE STATE OF NEW YORK

6-AB2-57

SKILLING - HELLE - CHRISTIANSEN - ROBERTSON Structural & Civil Engineers

PROJECT THE WORLD TRADE CENTER | TITLE CONNECTION DETAIL 163, 163A, B, C | DATE 11-21-67

REVISIONS

12/21/67

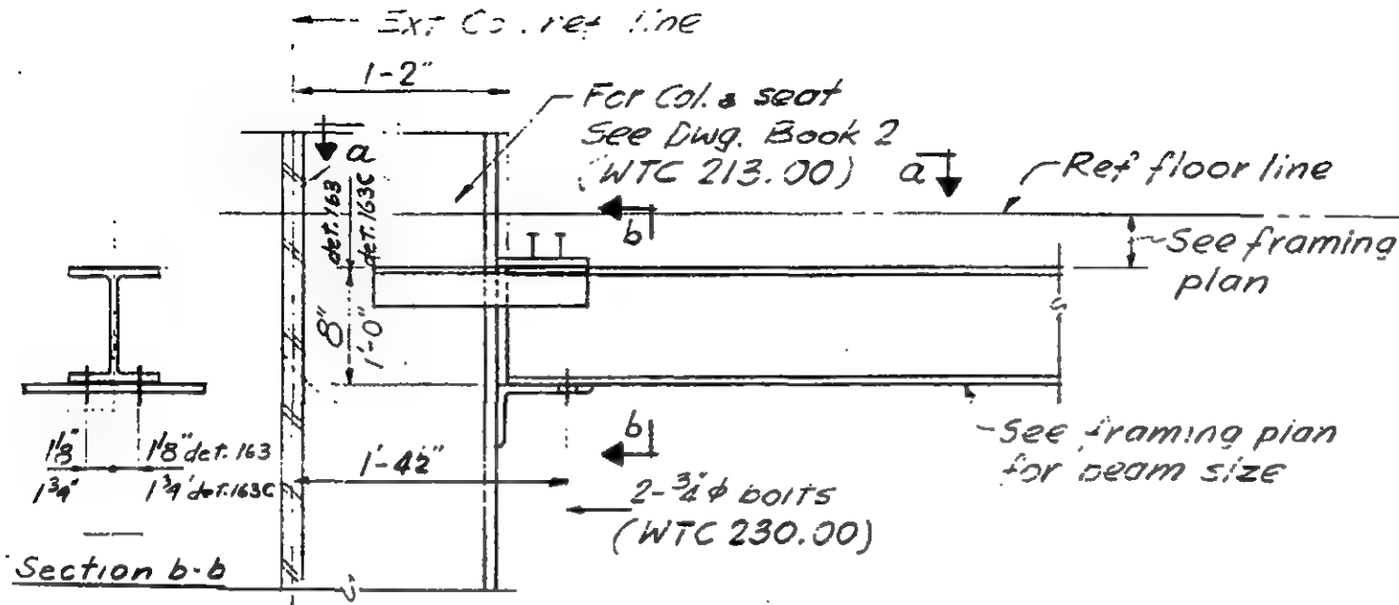

Detail 163 & 163C

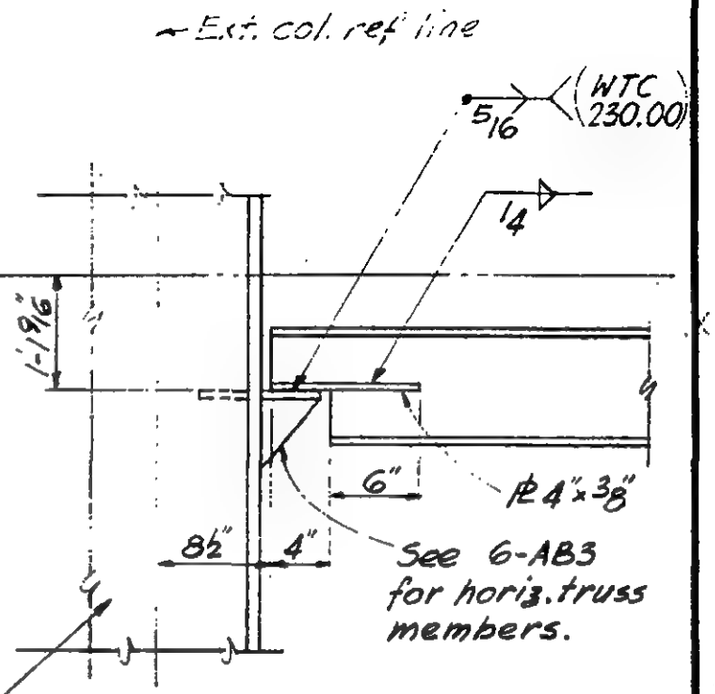

Detail 163A

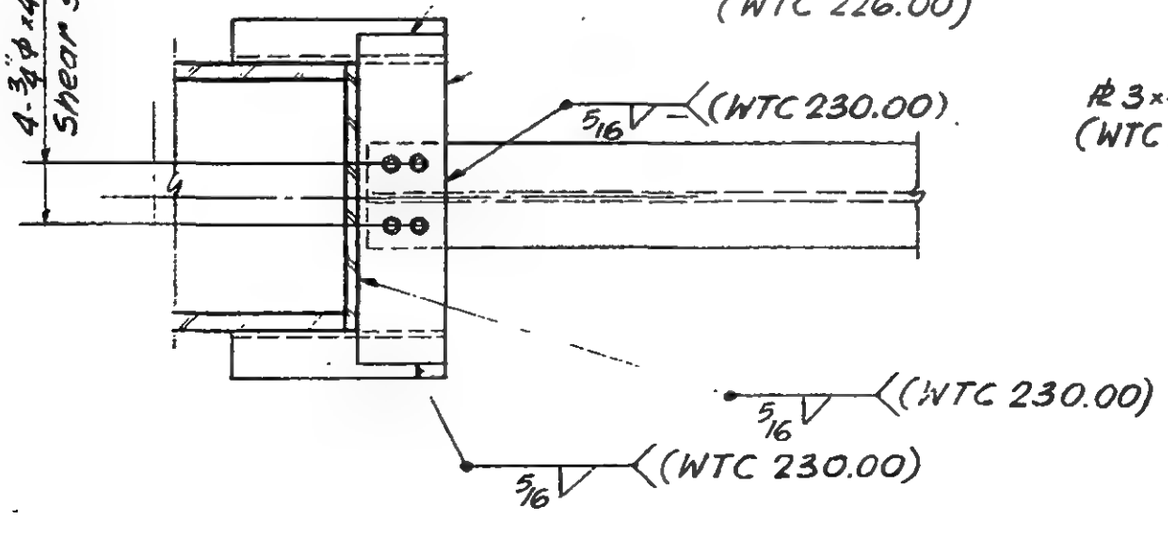

Section a-a

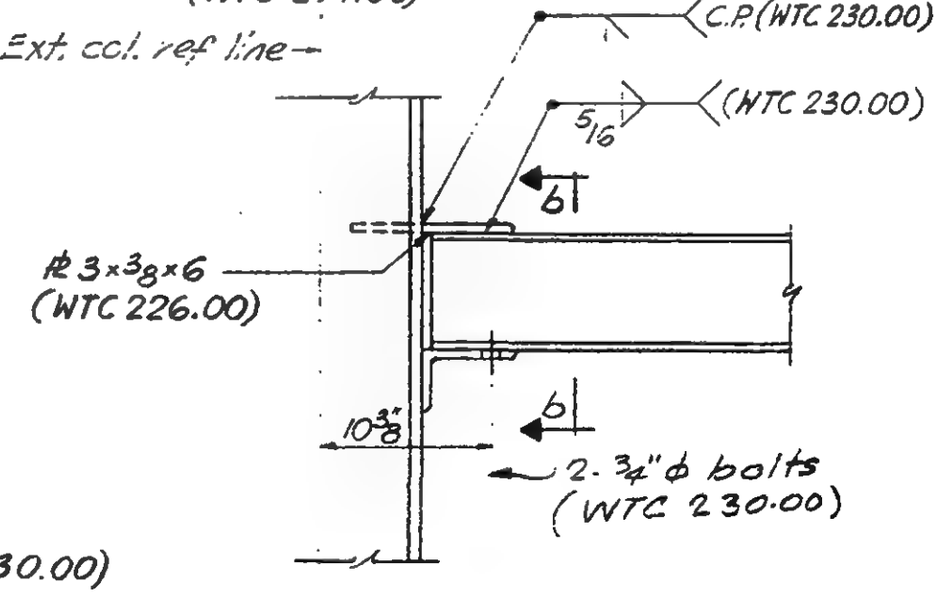

Detail 163B

LICENSED PROFESSIONAL ENGINEER
LESLIE E. ROBERTSON
No. 34360
UNIVERSITY OF THE STATE OF NEW YORK

6-AB2-58

SKILLING - HELLE - CHRISTIANSEN - ROBERTSON Structural & Civil Engineers

PROJECT THE WORLD TRADE CENTER | TITLE CONNECTION DETAIL 164, 164A | DATE 11-21-67

REVISIONS

8-17-68

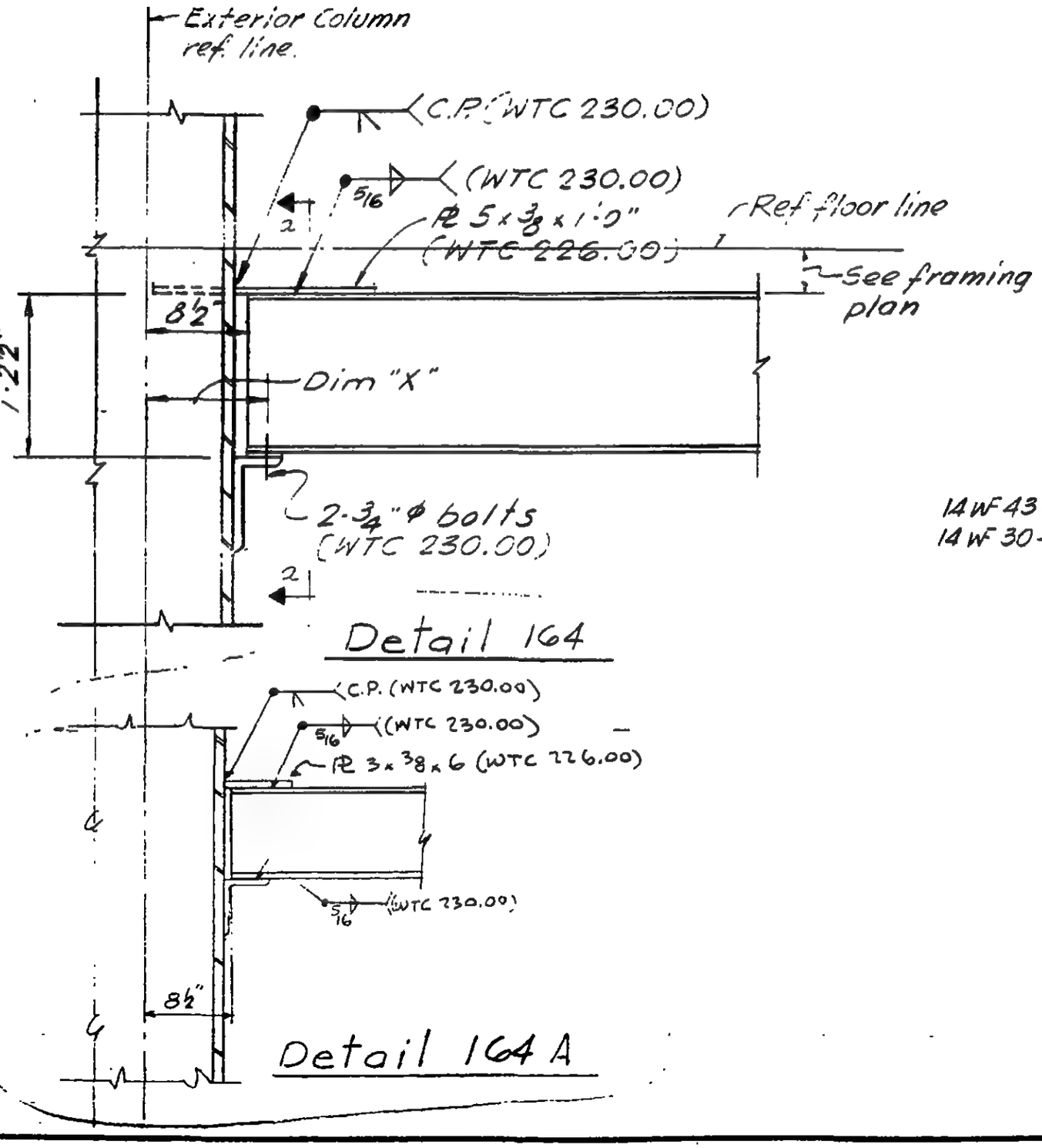

Schedule	
Floors	Dim. "X"
44	10 3/8"
78	9 15/16"

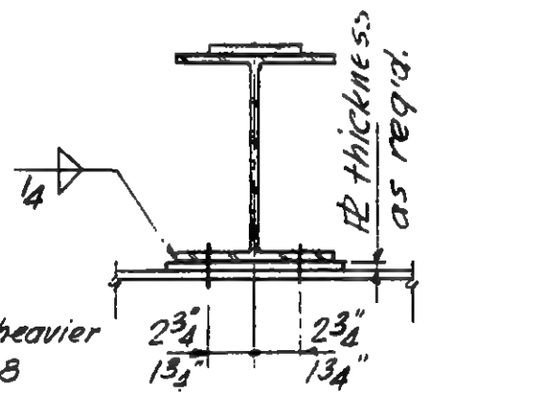

Section a-a

LICENSED PROFESSIONAL ENGINEER
LESLIE E. ROBERTSON
NO.
UNIVERSITY OF THE STATE

6-AB2-59

SKILLING - HELLE - CHRISTIANSEN - ROBERTSON Structural & Civil Engineers

PROJECT THE WORLD TRADE CENTER | TITLE CONNECTION DETAIL 165 | DATE 11-21-67

REVISIONS

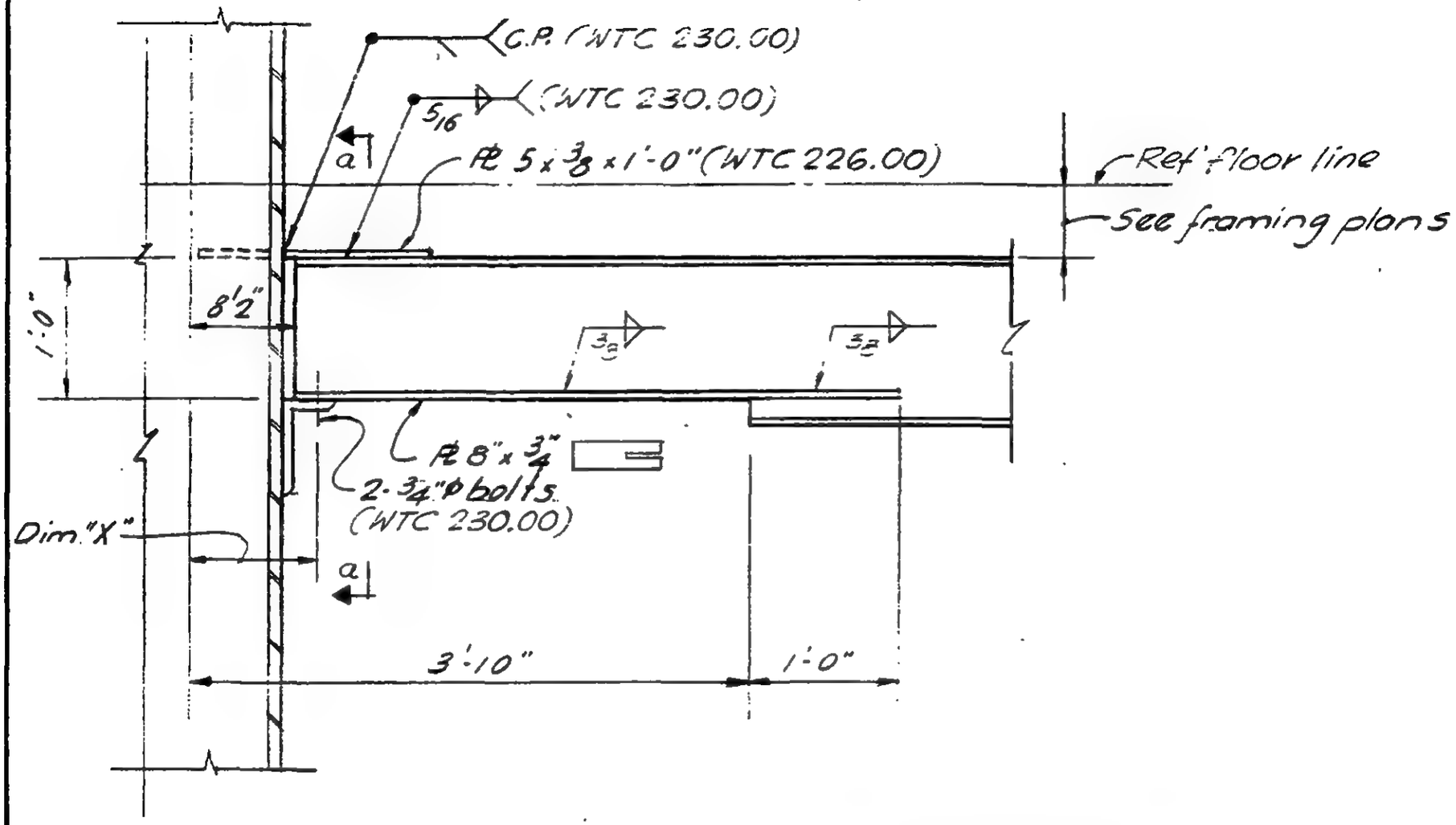

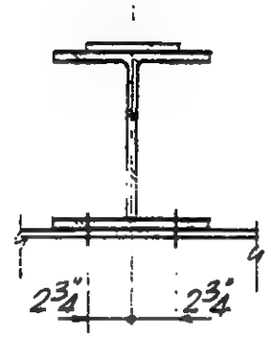

Section a-a

Schedule	
Floors	Dim. "X"
44. 46. 47. 48	10 3/8"
49	10 5/16"
78. 80 -83	9 15/16"

LICENSED PROFESSIONAL ENGINEER LESLIE E. ROBERTSON No. 34365 STATE OF NEW YORK

6-AD2-60

SKILLING - HELLE - CHRISTIANSEN - ROBERTSON Structural & Civil Engineers

PROJECT THE WORLD TRADE CENTER | TITLE CONNECTION DETAIL 167 | DATE 11-21-67

REVISIONS

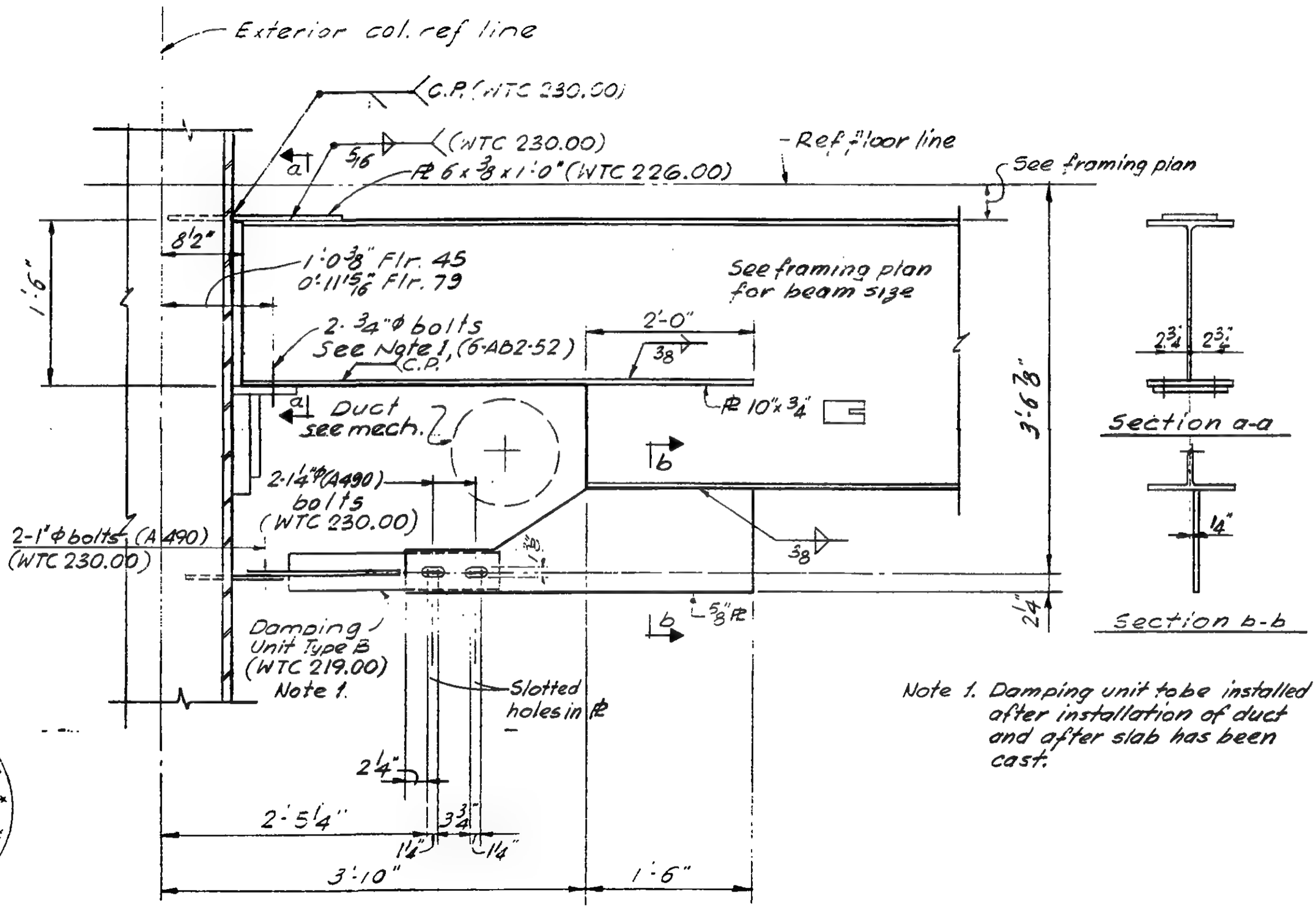

Note 1. Damping unit to be installed after installation of duct and after slab has been cast.

LICENSED PROFESSIONAL ENGINEER
LESLIE E. ROBERTSON
No. 34360
UNIVERSITY OF THE STATE OF NEW YORK

6-AB2-61

SKILLING - HELLE - CHRISTIANSEN - ROBERTSON Structural & Civil Engineers

PROJECT THE WORLD TRADE CENTER | TITLE CONNECTION DETAIL 168A & B & 169 | DATE 11-21-67

REVISIONS

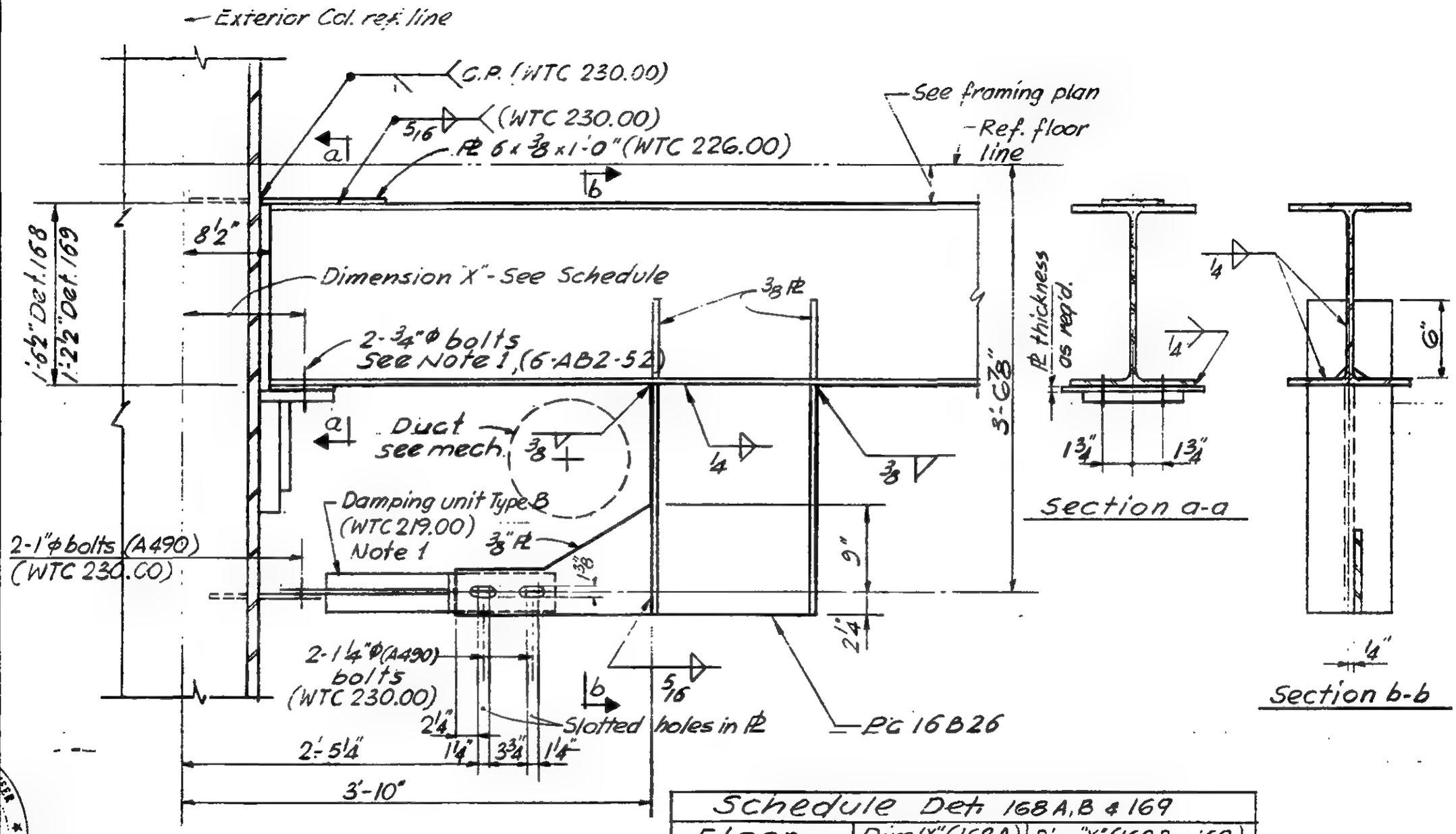

Schedule Det. 168A, B & 169		
Floor	Dim "X" (168A)	Dim "X" (168B & 169)
45	1-0 3/8	0-10 3/8
79	0-11 15/16	0-9 15/16

Note 1.
Damping unit to be installed after installation of duct and after slab has been cast.

LICENSED PROFESSIONAL ENGINEER — LESLIE E. ROBERTSON — No. 34360 — UNIVERSITY OF THE STATE OF NEW YORK

6-AB2-62

WORTHINGTON, SKILLING, HELLE & JACKSON — Civil & Structural Engineers

PROJECT	TITLE	DATE
THE WORLD TRADE CENTER	CONNECTION DETAIL 170 A thru G	6-30-67

REVISIONS

7-28-67

8-5-67

8-14-67

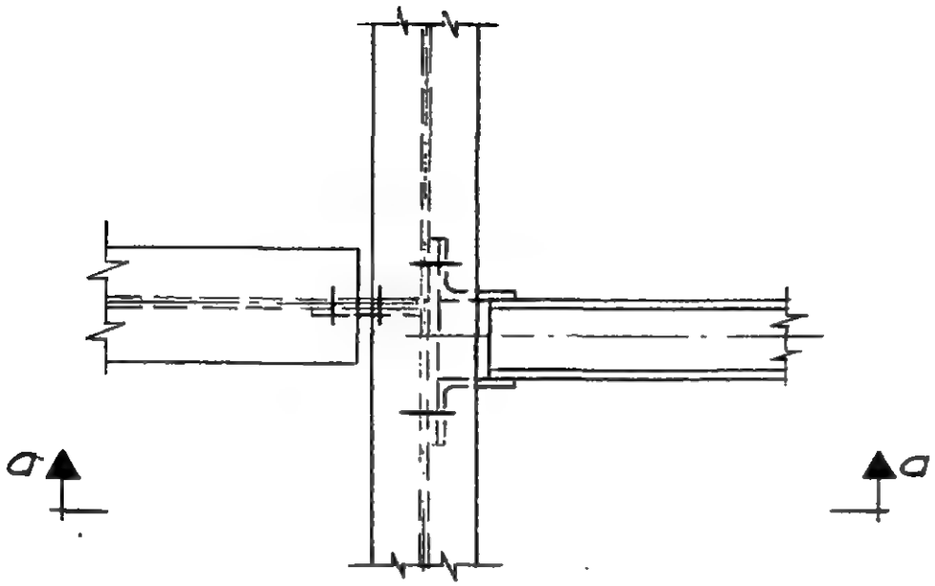

Plan

See detail 450 (6 ABI-101) for connection of □

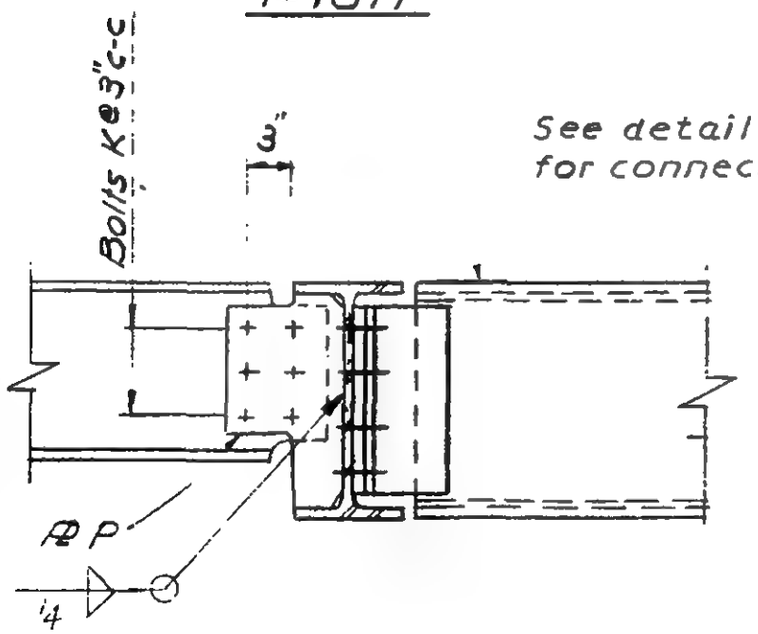

Section a-a
Detail 170 A

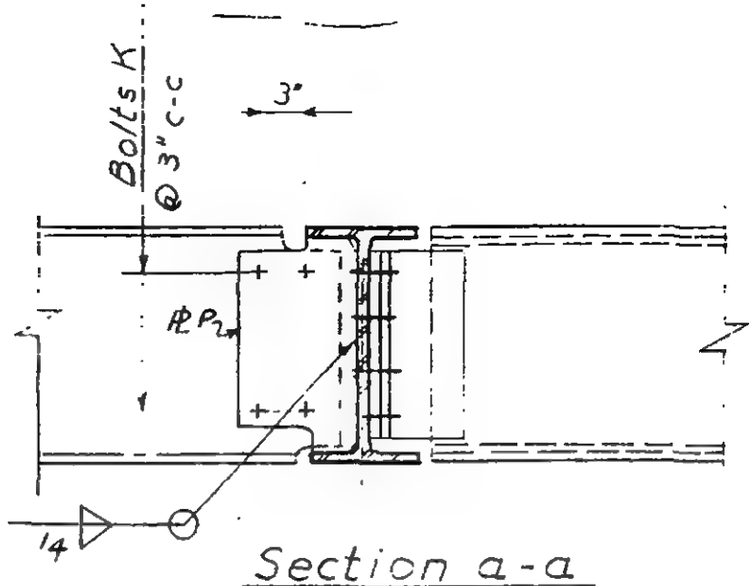

Section a-a
Detail 170 B, E, F

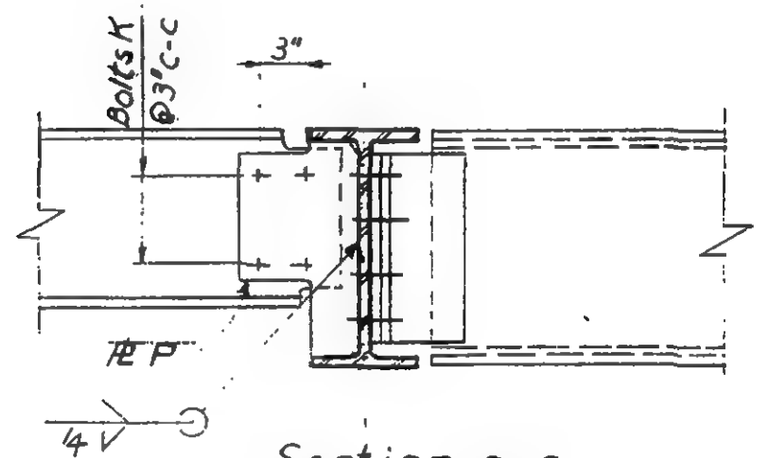

Section a-a
Detail 170 C, G

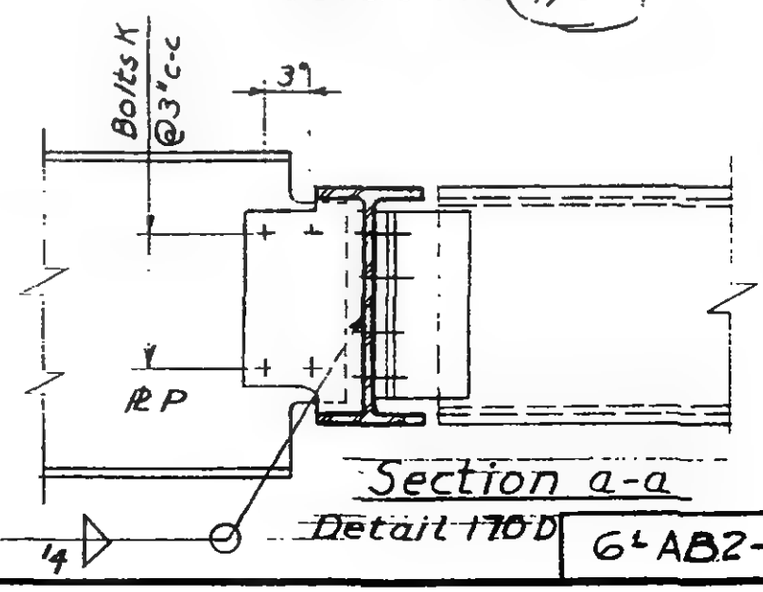

Section a-a
Detail 170 D

LICENSED PROFESSIONAL ENGINEER
LESLIE E. ROBERTSON
No. 34360
UNIVERSITY OF THE STATE OF NEW YORK

6 AB2-13

WORTHINGTON, SKILLING, HELLE & JACKSON — Civil & Structural Engineers

PROJECT THE WORLD TRADE CENTER | TITLE SCHEDULE FOR DETAIL 170 A - F | DATE 6-30-67

REVISIONS
7-28-67
8-5-67

	170 A	170 B	170 C	170 D	170 E	170 F
PLATES P	3/8"	3/8"	3/8"	1/2"	7/16"	7/16"
BOLTS K	6-7/8"ϕ (A325)	6-7/8"ϕ	6-7/8"ϕ	8-7/8"ϕ	8-3/4"ϕ	8-3/4"ϕ

LICENSED PROFESSIONAL ENGINEER
LESLIE E. ROBERTSON
No. 34360
UNIVERSITY OF THE STATE OF NEW YORK

6-AB2-733

SKILLING - HELLE - CHRISTIANSEN - ROBERTSON Structural & Civil Engineers

PROJECT THE WORLD TRADE CENTER | TITLE SCHEDULE FOR DETAIL 170 G | DATE 8-14-67

REVISIONS

REF. DWG.	G-AB2-73					
	170 G					
PLATES						
P	$\frac{3}{8}$"					
BOLTS	4-$\frac{3}{4}$"ϕ					

G-AB2-73.2

SKILLING - HELLE - CHRISTIANSEN - ROBERTSON Structural & Civil Engineers

PROJECT THE WORLD TRADE CENTER | TITLE CONNECTION DETAILS 171 A, B | DATE 10-5-67

REVISIONS

1

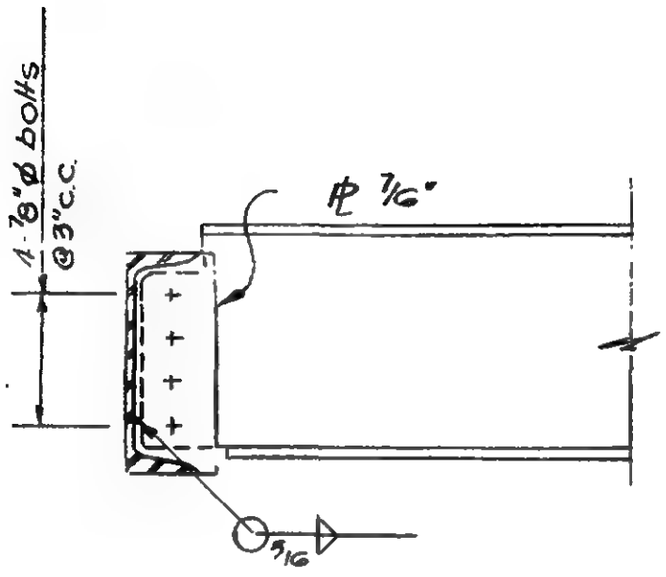

Elevation
Det. 171 A

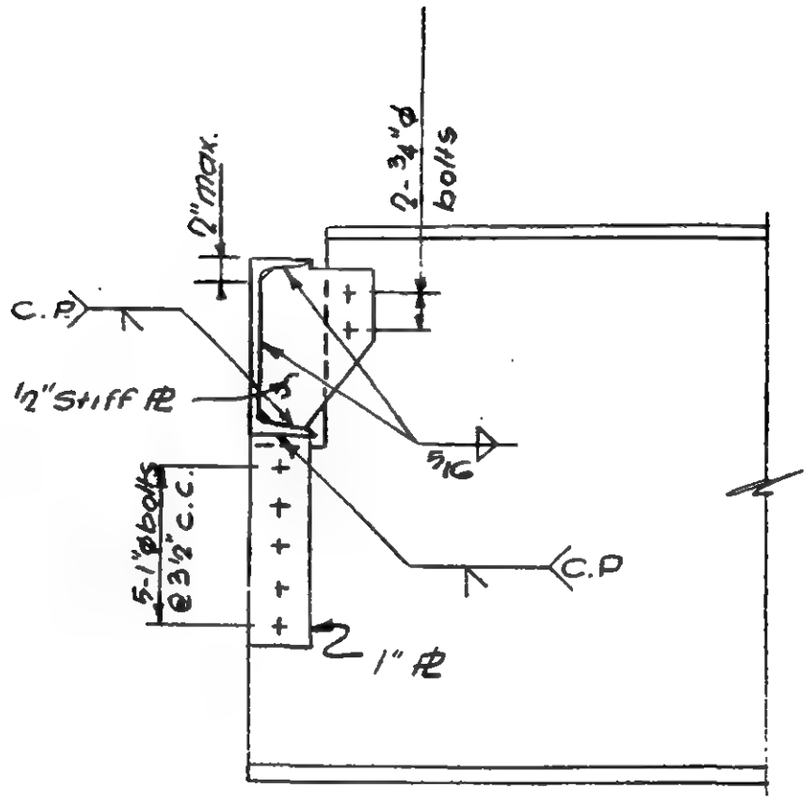

Elevation
Det 171 B

LESLIE E. ROBERTSON
No. 34960
UNIVERSITY OF THE STATE OF NEW YORK

G-AB2-73-5

WORTHINGTON, SKILLING, HELLE & JACKSON — Civil & Structural Engineers

PROJECT THE WORLD TRADE CENTER | TITLE CONNECTION DETAIL 172 A, B & C | DATE 5-9-67

REVISIONS

7-28-67
8-5-67
9-15-67
10-2-67
10-5-67
11-17-67

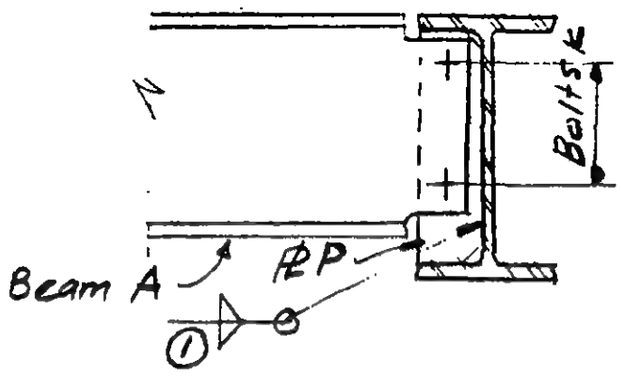

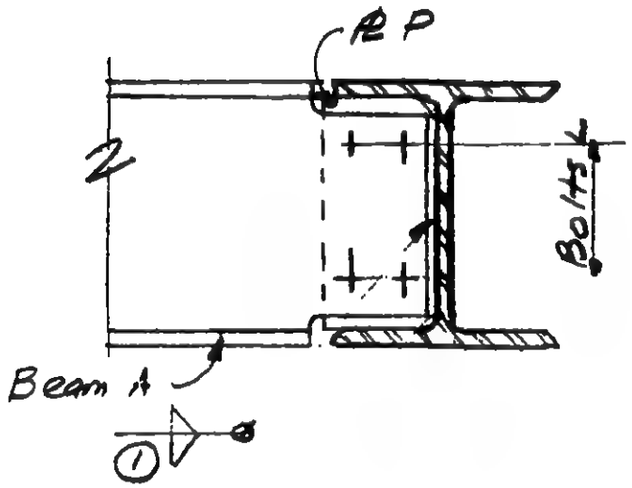

SCHEDULE

Detail	Beam A	Plate P	Bolts K	Bolts L	Weld (1)
172A	24 WF, 24×61	4"x 1/2"	7-1"ϕ	-	3/8
172A	16 WF, 18 WF	4"x 1/2"	4-7/8"ϕ	-	3/8
172A	12 WF 58 # lighter	7"x 1/2"	—	6-3/4"ϕ	3/8
172A	12 WF 65 # heavier*	7"x 3/4"	-	6-1"ϕ	1/2
172B	14 B	4"x 1/2"	4-3/4"ϕ	-	5/16
172B	10 WF, 12 B	4"x 3/8"	3-3/4"ϕ	—	4
172B	12 WF, 14 WF	4"x 3/8"	3-7/8"ϕ	—	4
172B	16 WF # 16 B	4"x 3/8"	4-3/4"ϕ	—	4
172B	30×7 BU, (38×7 BU)	4"x 1/2"	5-7/8"ϕ	—	3/8
172C	12 B	7"x 3/8"	—	4-7/8"ϕ	5/16
172C	8 B	7"x 3/8"	—	4-3/4"ϕ	4
172C	18 x 7 1/2 WF	4"x 1/2"	4-1"ϕ	—	3/8

* Except as otherwise shown above

LICENSED PROFESSIONAL ENGINEER LESLIE E. ROBERTSON No. 34960 STATE OF NEW YORK

G-AB2-74

SKILLING - HELLE - CHRISTIANSEN - ROBERTSON Structural & Civil Engineers

PROJECT THE WORLD TRADE CENTER | TITLE CONNECTION DETAIL 173 A | DATE 5-9-67

REVISIONS

10-2-67

1-24-68

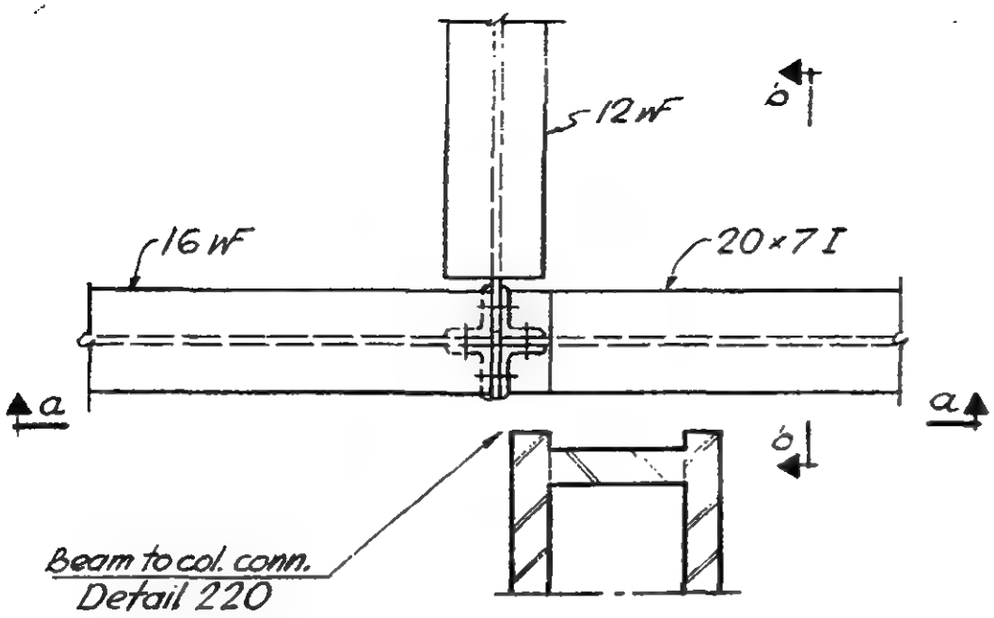

Plan

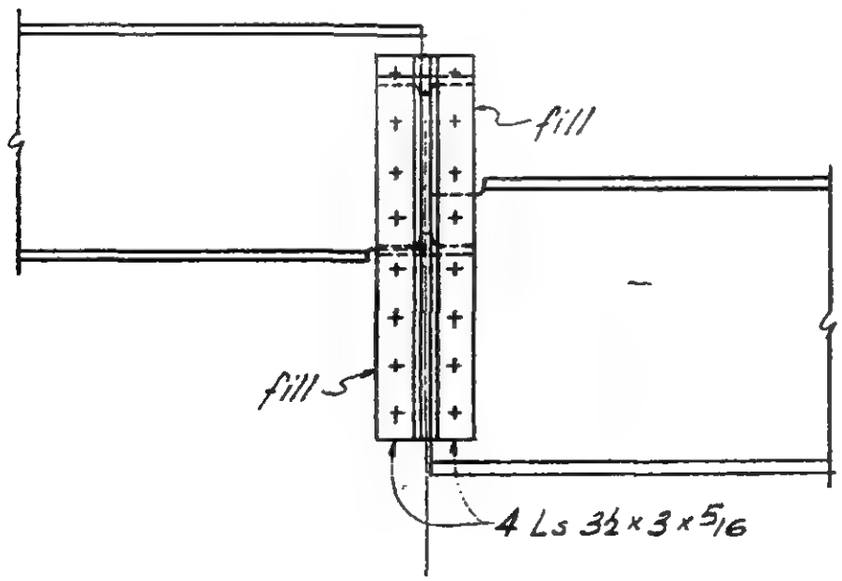

Section a-a

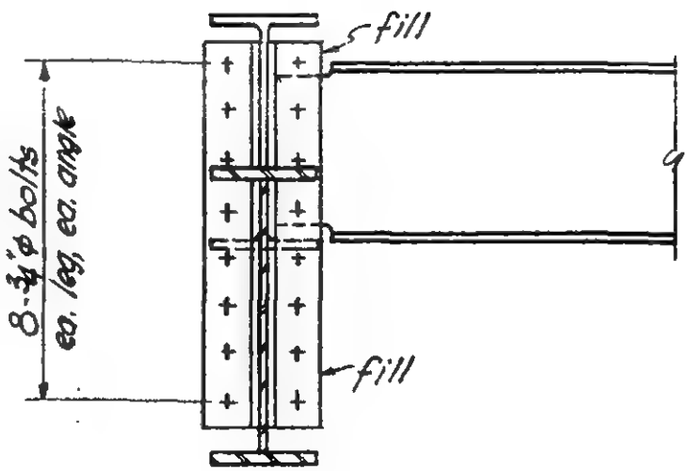

Section b-b

LICENSED PROFESSIONAL ENGINEER
LESLIE E. ROBERTSON
No. 34360
UNIVERSITY OF THE STATE OF NEW YORK

6-AB2-75

SKILLING - HELLE - CHRISTIANSEN - ROBERTSON Structural & Civil Engineers

PROJECT THE WORLD TRADE CENTER | TITLE CONNECTION DETAIL 173 B | DATE 1-24-68

REVISIONS

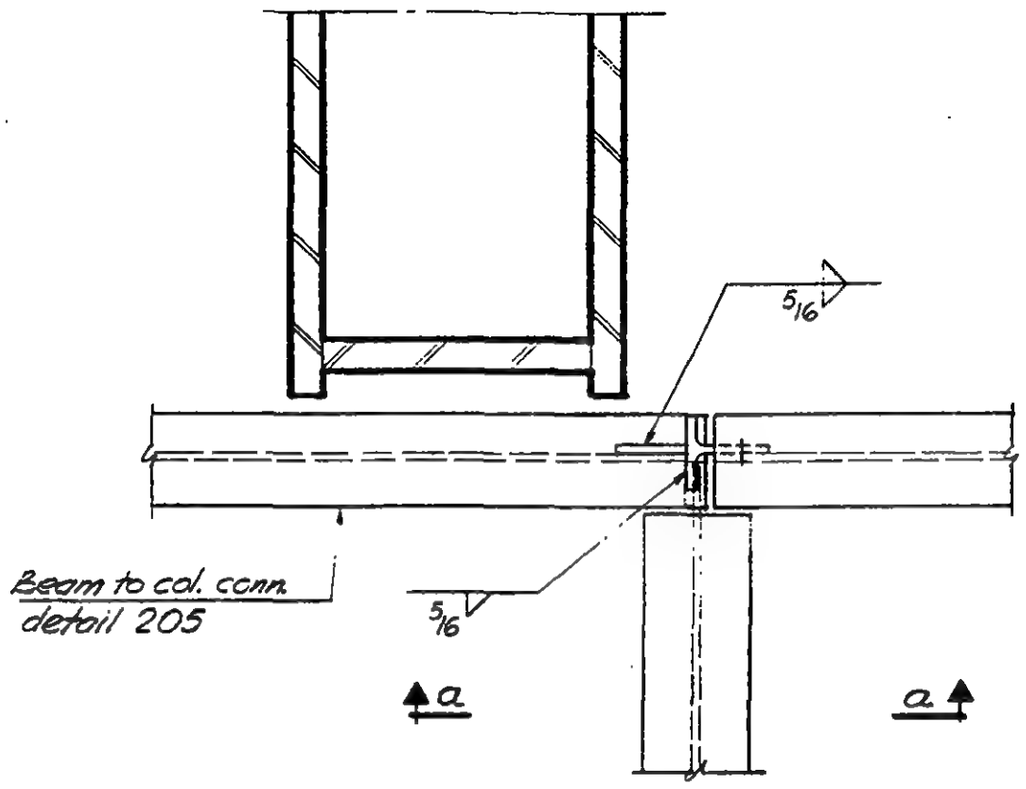

Plan

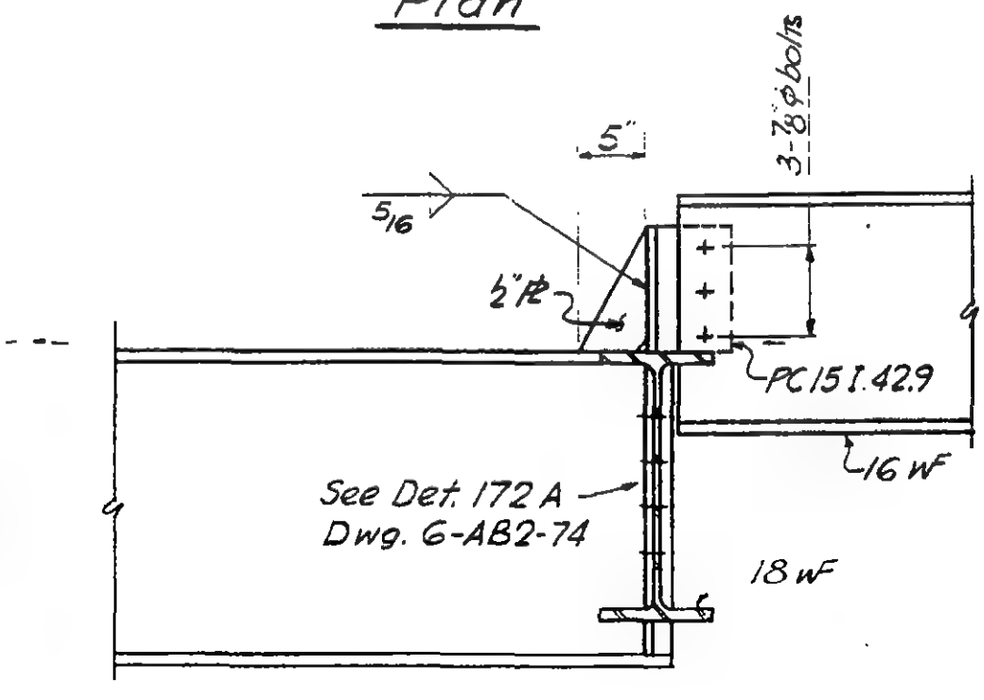

Section a-a

LICENSED PROFESSIONAL ENGINEER
LESLIE E. ROBERTSON
No. 34360
UNIVERSITY OF THE STATE OF NEW YORK

6-AB2-75.1

SKILLING - HELLE - CHRISTIANSEN - ROBERTSON Structural & Civil Engineers

PROJECT THE WORLD TRADE CENTER | TITLE CONNECTION DETAIL 174 A,B | DATE 8-5-67

REVISIONS

9-15-67

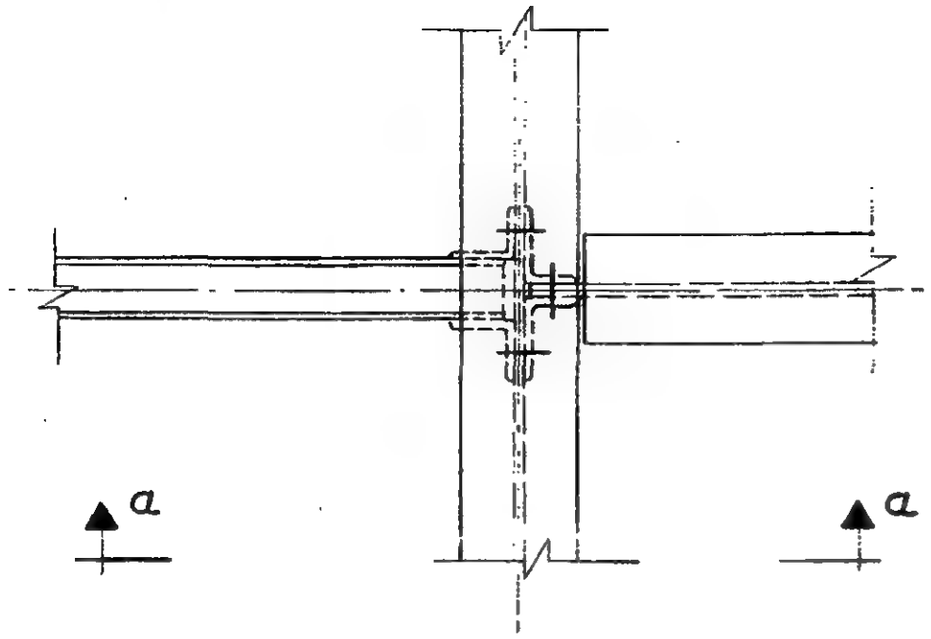

Plan

SCHEDULE		
	174 A	174 B
ANGLES		
P	4 x 3½ x ⅜	4x3½x⅜
Q	6 x 3½ x ⅜	6x3½x⅜
BOLTS		
K	3 - ¾" ϕ	3 - ¾" ϕ
L	—	3 - ¾" ϕ
WELDS		
①	¼	¼

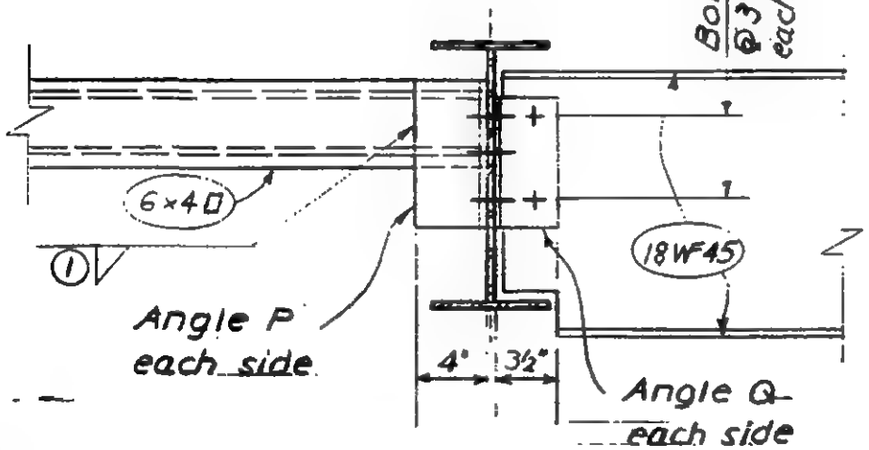

Section a-a
174 A

Modify detail 451 (for 6x4 tube)
as shown when combined with
detail 174 A or B

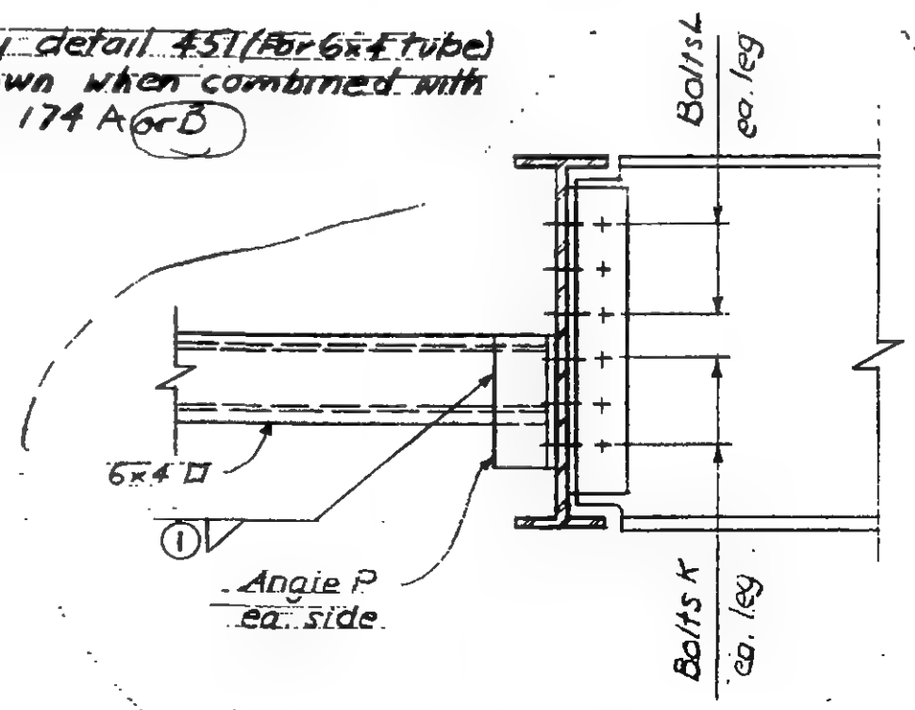

Section a-a
174 B

6-AB2-76

L. E. ROBERTSON PROFESSIONAL ENGINEER
LESLIE E. ROBERTSON
No. 34360
UNIVERSITY OF THE STATE OF NEW YORK

WORTHINGTON, SKILLING, HELLE & JACKSON — Civil & Structural Engineers

PROJECT THE WORLD TRADE CENTER | TITLE CONNECTION DETAIL 175 A | DATE 7-28-67

REVISIONS

8-5-67

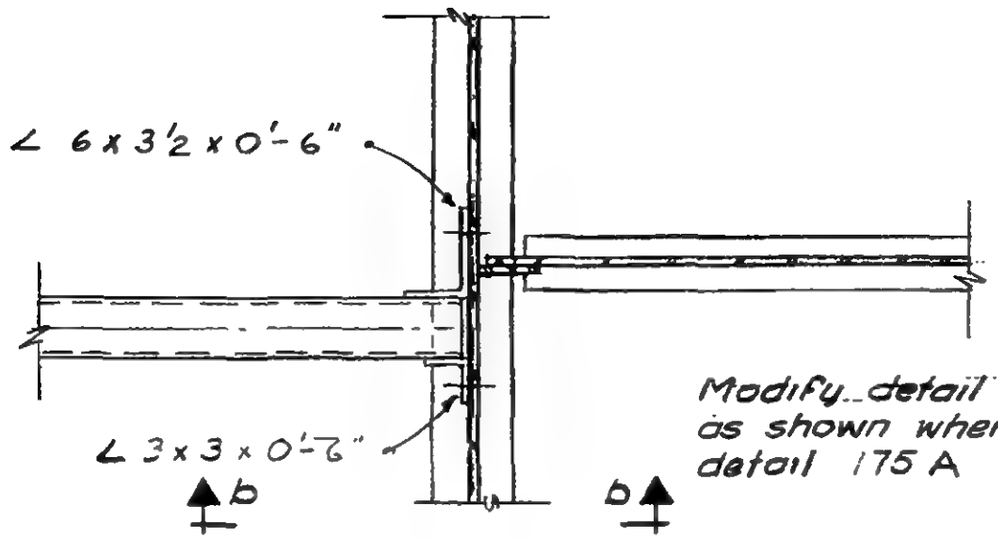

Modify detail 451 (For 6x4 tube) as shown when combined with detail 175 A

Plan a-a

BEAM 'B'	Bolts K
8B	2-⅞"ϕ A325
12B	3-⅞"ϕ A325

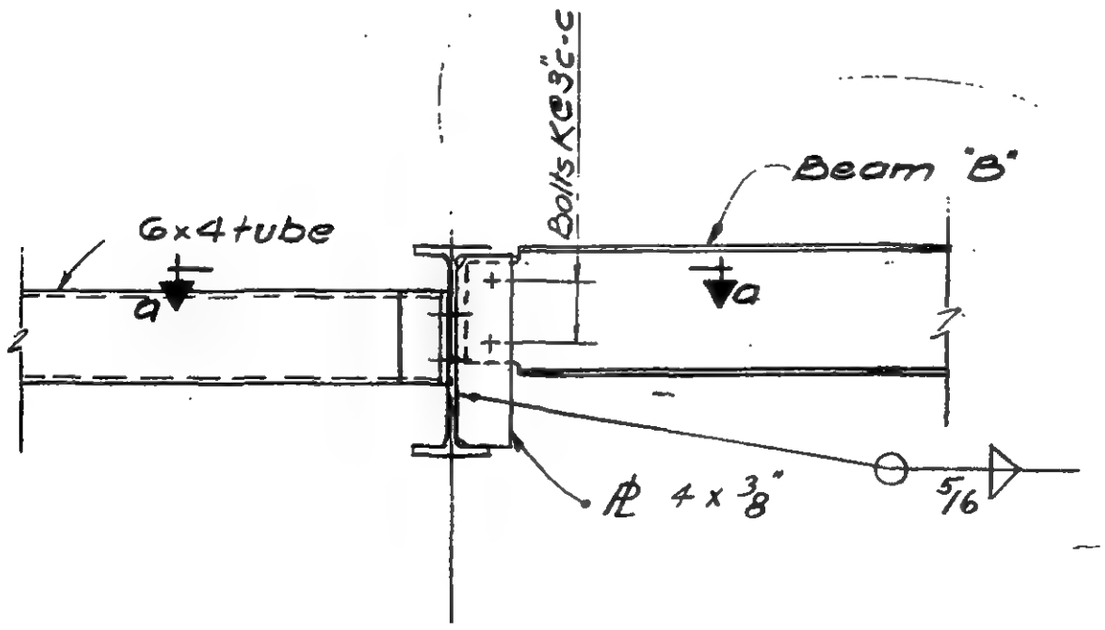

Section b-b

LICENSED PROFESSIONAL ENGINEER LESLIE E. ROBERTSON No. 34360 STATE OF NEW YORK

6-AB2-77

SKILLING - HELLE - CHRISTIANSEN - ROBERTSON Structural & Civil Engineers

PROJECT THE WORLD TRADE CENTER | TITLE CONNECTION DETAIL 175 B | DATE 8-14-67

REVISIONS

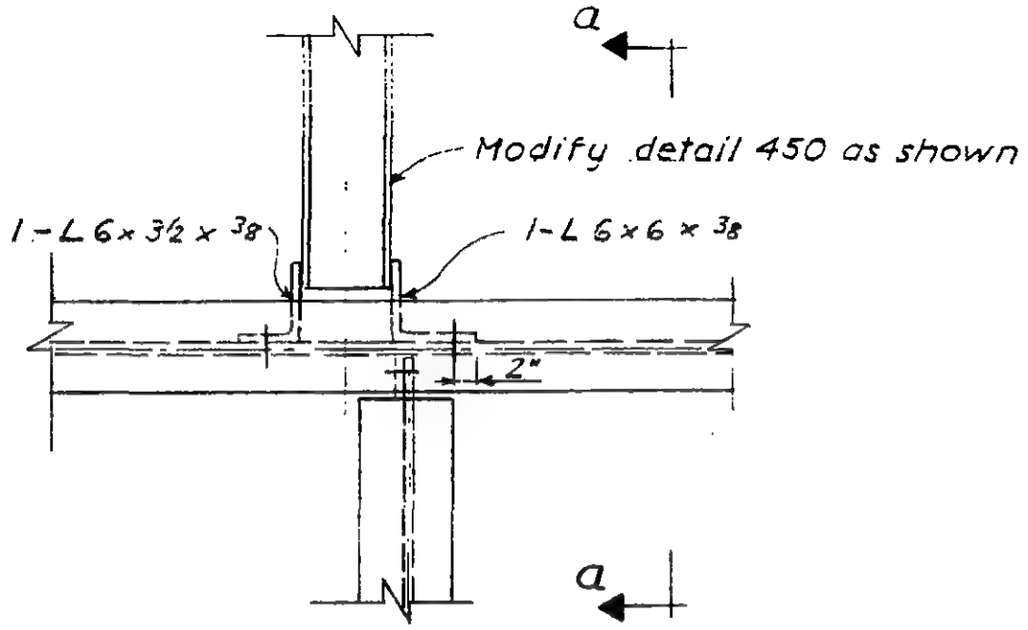

Plan

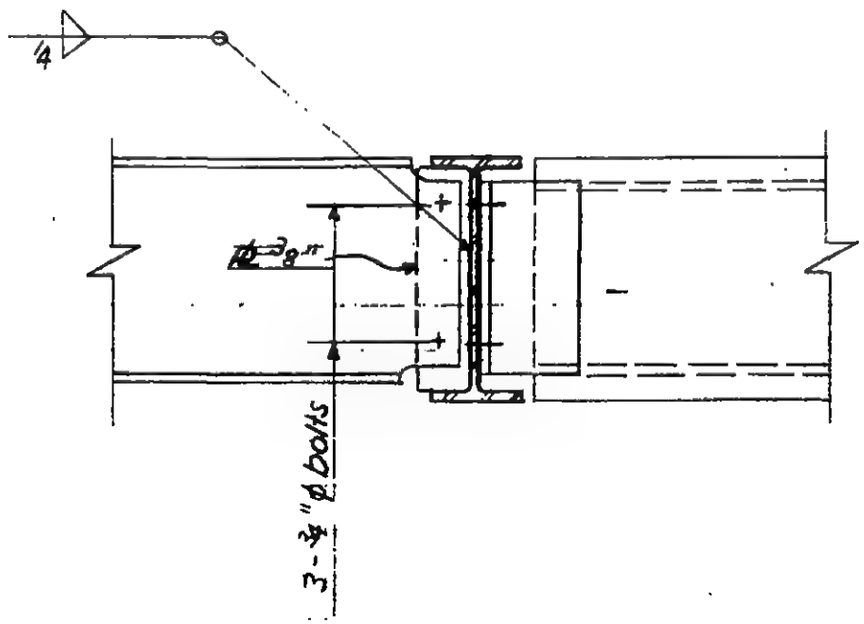

Section a-a

LICENSED PROFESSIONAL ENGINEER
LESLIE E. ROBERTSON
No. 84360
UNIVERSITY OF THE STATE OF NEW YORK

6-AB2-77.1

WORTHINGTON, SKILLING, HELLE & JACKSON — Civil & Structural Engineers

PROJECT: THE WORLD TRADE CENTER | TITLE: CONNECTION DETAIL 176A | DATE: 6-5-67

REVISIONS

0-2-67

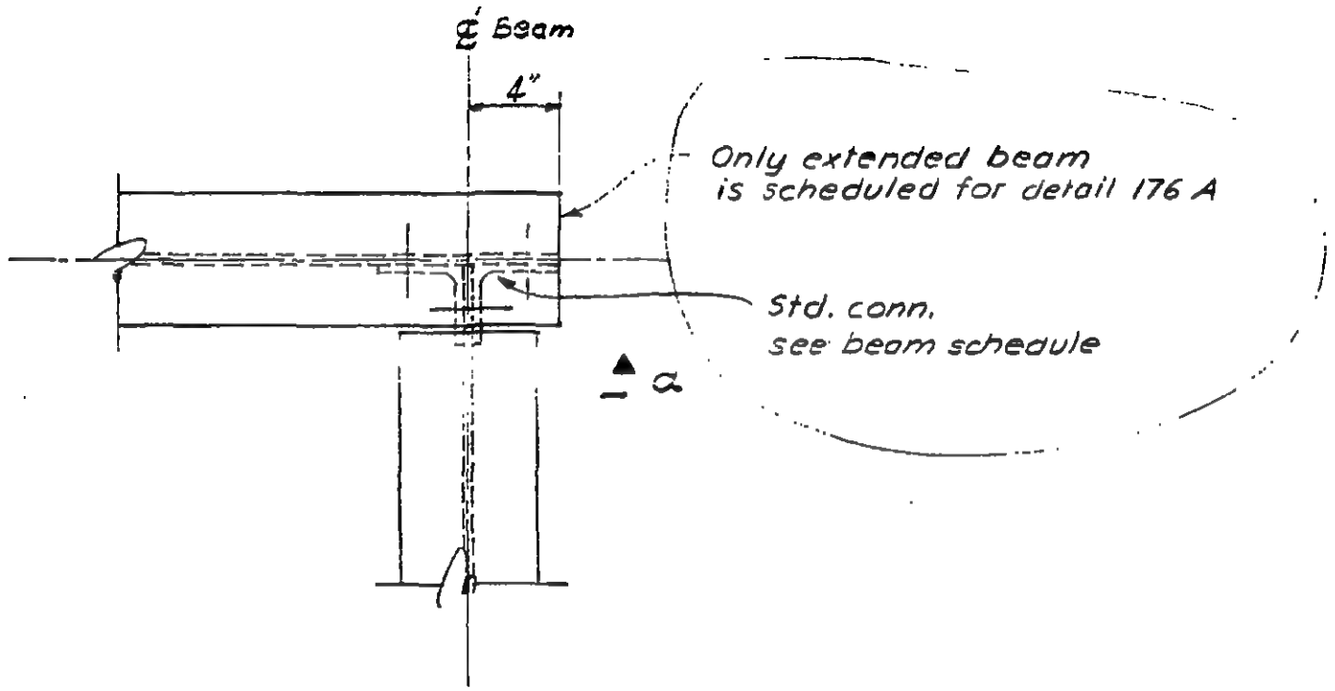

PLAN

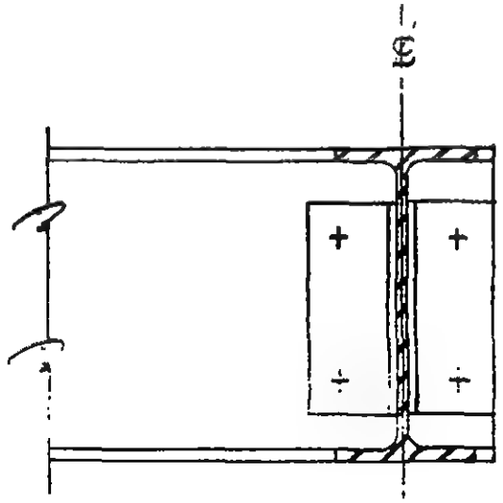

Section a-a

JEROME E. ROBERTSON
REGISTERED PROFESSIONAL ENGINEER
UNIVERSITY OF THE STATE OF NEW YORK

6-AB2-78

WORTHINGTON, SKILLING, HELLE & JACKSON — Civil & Structural Engineers

PROJECT: THE WORLD TRADE CENTER | TITLE: CONNECTION DETAIL 178 A, B | DATE: 6-5-67

REVISIONS

8-5-67

10-2-67

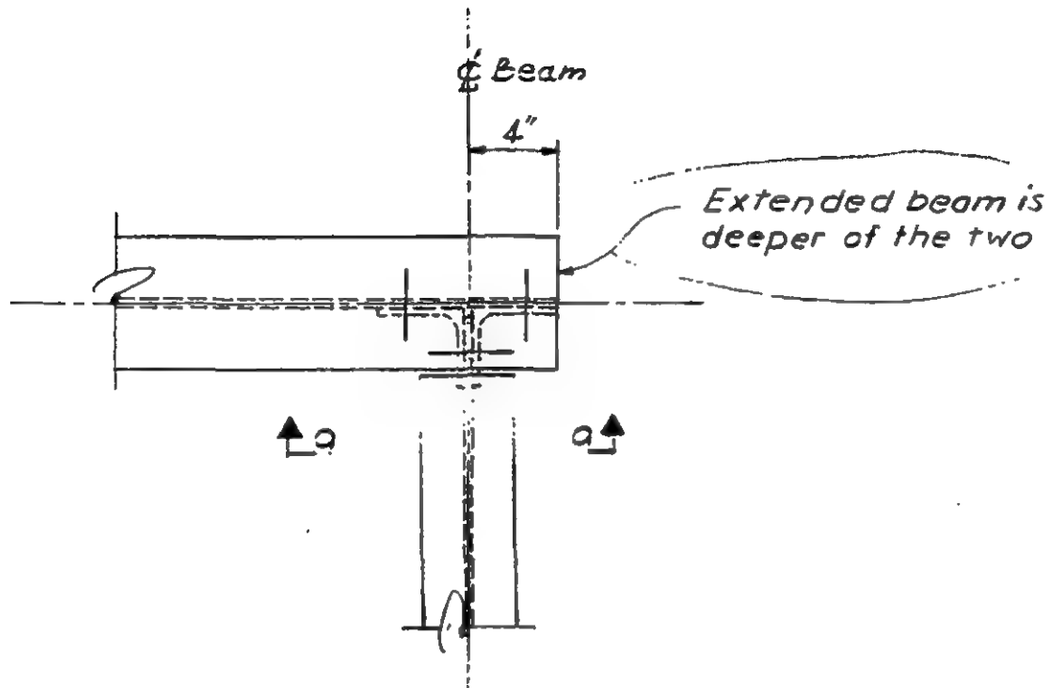

PLAN

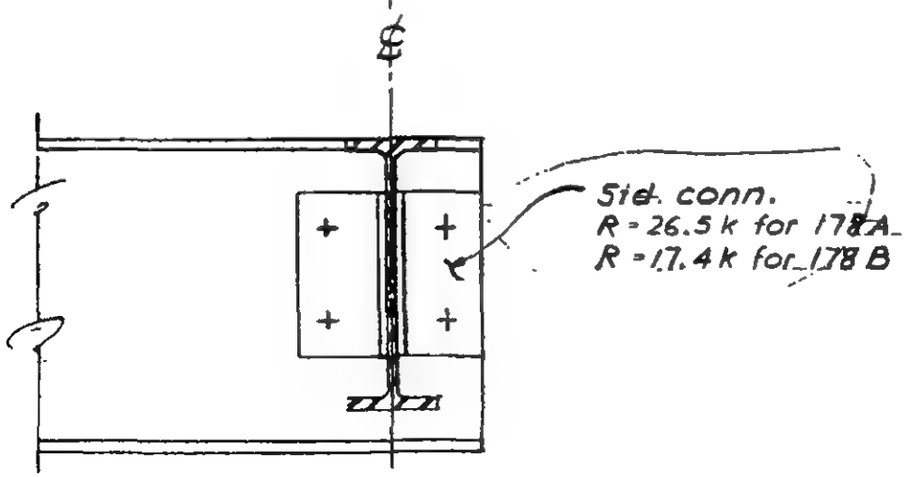

Section a-a

LICENSED PROFESSIONAL ENGINEER
LESLIE E. ROBERTSON
No. 34360
UNIVERSITY OF THE STATE OF NEW YORK

6-AB2

SKILLING - HELLE - CHRISTIANSEN - ROBERTSON Structural & Civil Engineers

PROJECT THE WORLD TRADE CENTER | TITLE CONNECTION DETAILS 179 A,B | DATE 10-5-67

REVISIONS

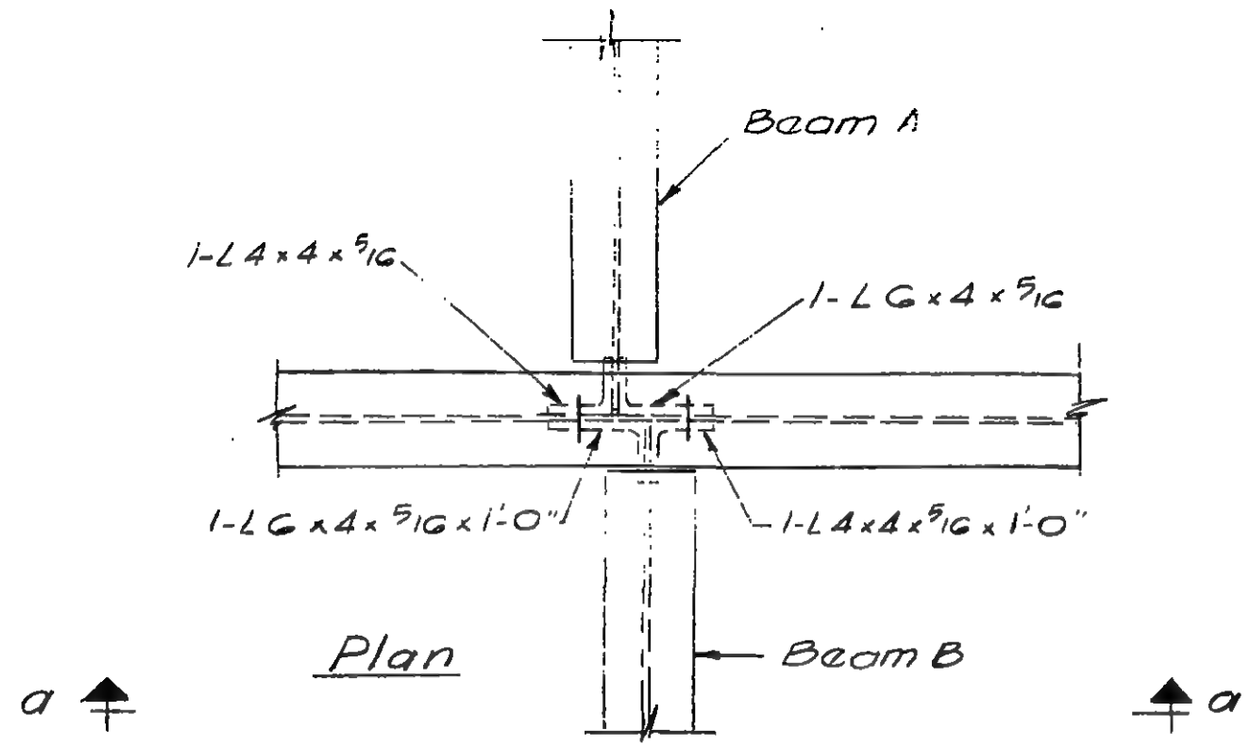

Plan

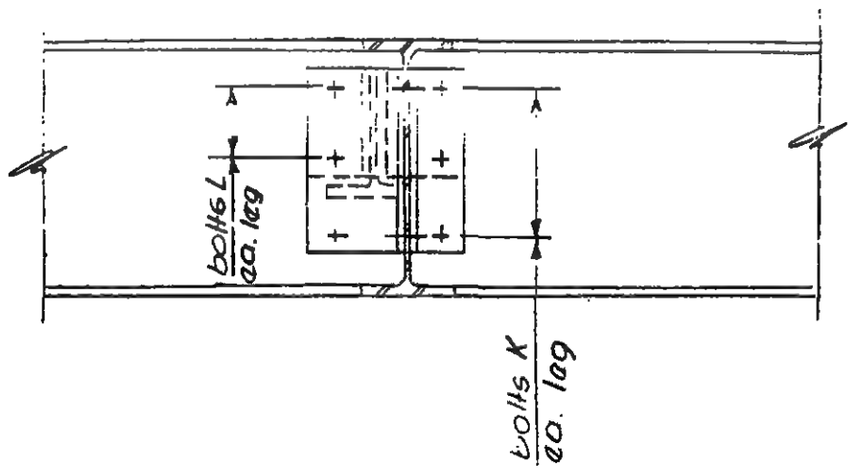

Section a-a

Detail	Beam A	Beam B	bolts K	bolts L
A	12B, 14B	16WF	4-3/4" ϕ	3-3/4" ϕ
B	10B	20 x 6 I	4-7/8" ϕ	2-7/8" ϕ

LICENSED PROFESSIONAL ENGINEER
LESLIE E. ROBERTSON
No. 34360
UNIVERSITY OF THE STATE OF NEW YORK

G-AB2-80.5

WORTHINGTON, SKILLING, HELLE & JACKSON — Civil & Structural Engineers

PROJECT THE WORLD TRADE CENTER | TITLE SPLICE DETAILS 401A,B,C, 402A 405, 406, 414A,B, 430A,B,C | DATE 8-5-67

REVISIONS

9-18-68

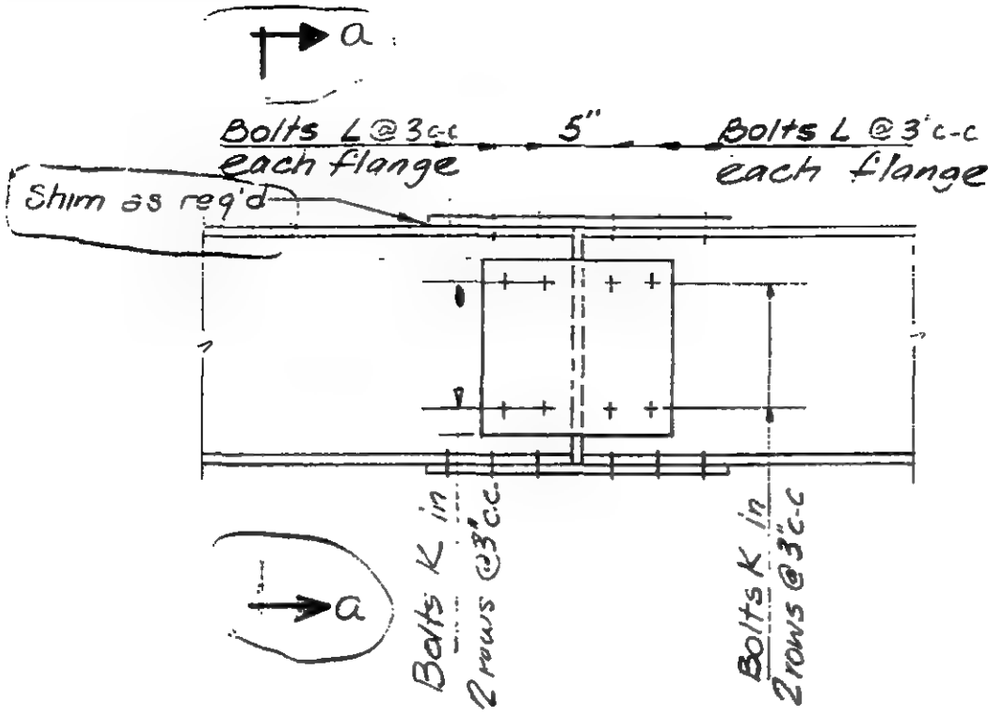

408A

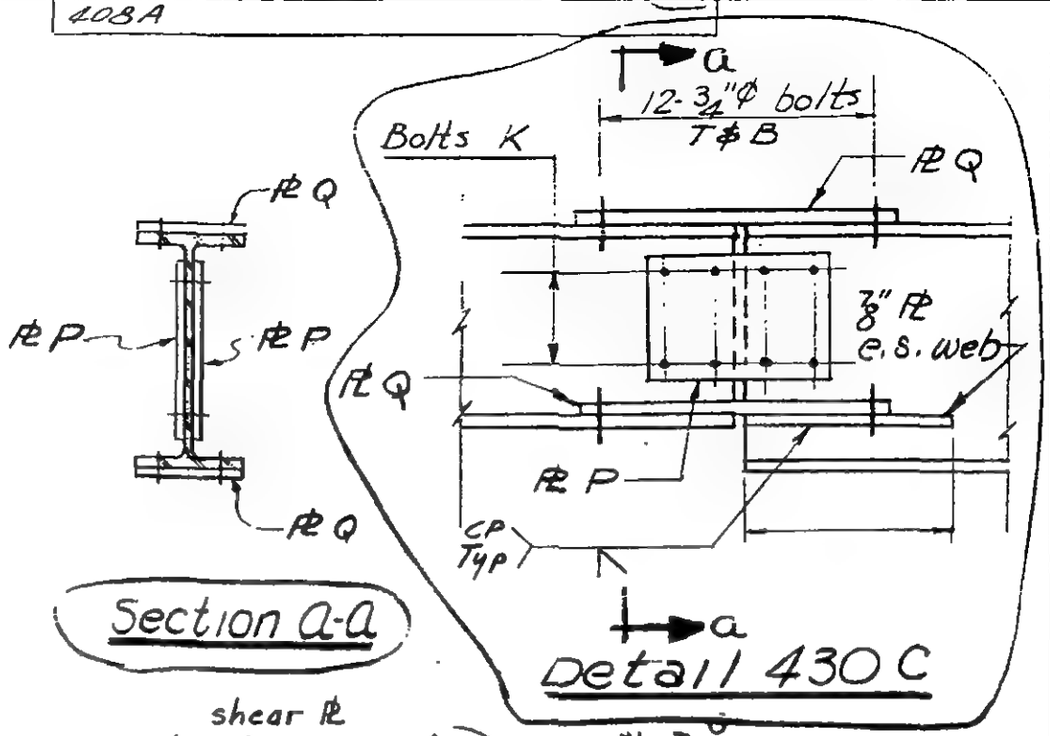

Section a-a

Detail	Bolts K	Bolts L	⊄P	⊄Q
401A,B	6-7/8"ϕ	6-7/8"ϕ	1/2	1/2
402 A	6-7/8"ϕ	6-7/8"ϕ	1/2	1/2
405	6-7/8"ϕ	6-7/8"ϕ	1/2	1/2
406	4-3/4"ϕ	4-3/4"ϕ	3/8	1/2
414 A,B	8-1"ϕ	6-1"ϕ	3/8	1/2
401 C	6-1 1/8"ϕ	8-1 1/8"ϕ	1/2	3/4
430A	14-7/8"ϕ	6-1 1/8"ϕ	1/2	5/8
408A	8-1"ϕ	6-1"ϕ	3/8	1/2
430B	16-7/8"ϕ	8-1 1/8"ϕ	1/2	7/8
430C	16-7/8"ϕ	8-1 1/8"ϕ	1/2	7/8"

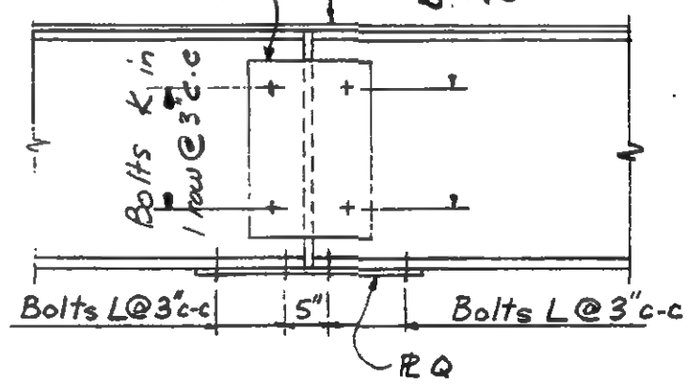

Detail 406 (only)

LICENSED PROFESSIONAL ENGINEER
LESLIE E. ROBERTSON
No. 34360
UNIVERSITY OF THE STATE OF NEW YORK

6-AB2-81

WORTHINGTON, SKILLING, HELLE & JACKSON — Civil & Structural Engineers

PROJECT THE WORLD TRADE CENTER | TITLE SPLICE DETAILS 403A, 404A, 409A,B,C,D | DATE 8-5-67

REVISIONS

- 2 - 67

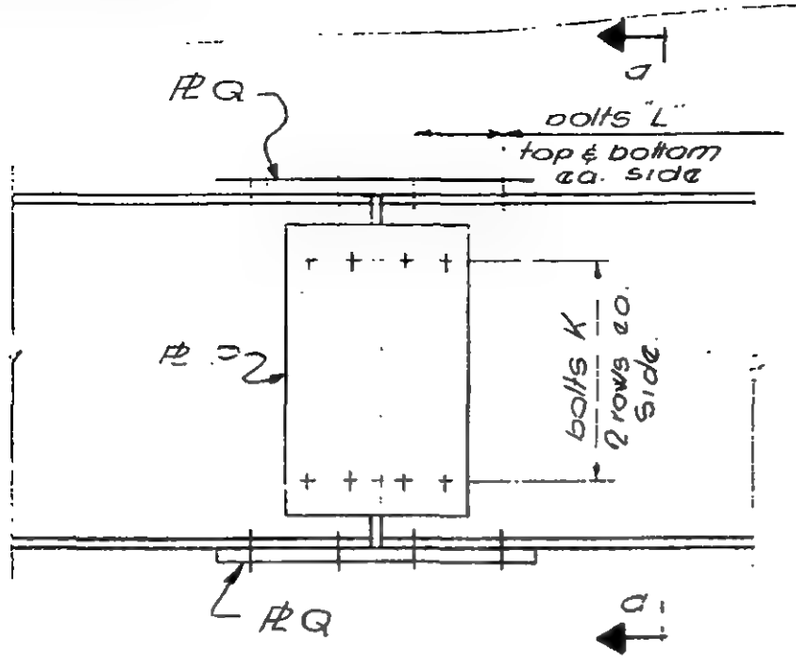

Elevation

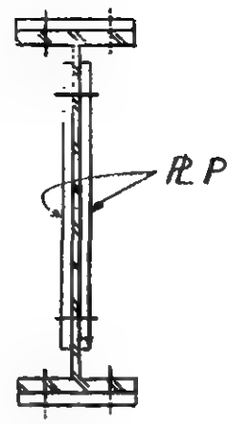

Section a-a

Detail	bolts K	bolts L	℄ P	℄ Q
403 A	12-1"ϕ	—	1/2"	—
409 A	12-1"ϕ	—	1/2"	—
409 B	12-1"ϕ	6-7/8"ϕ	5/8"	1/2
409 C	12-7/8"ϕ	—	1/2"	—
409 D	12-3/4"ϕ	—	1/2"	—

403 A & 409 A, B, C, D

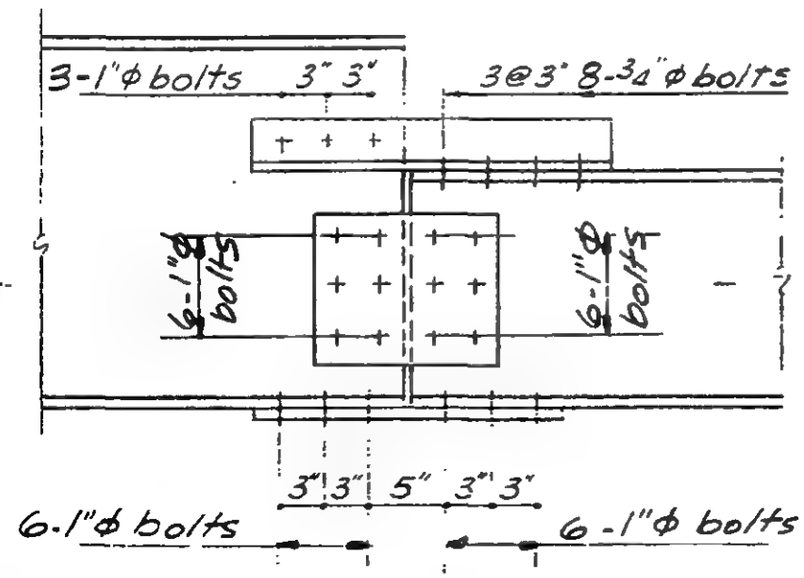

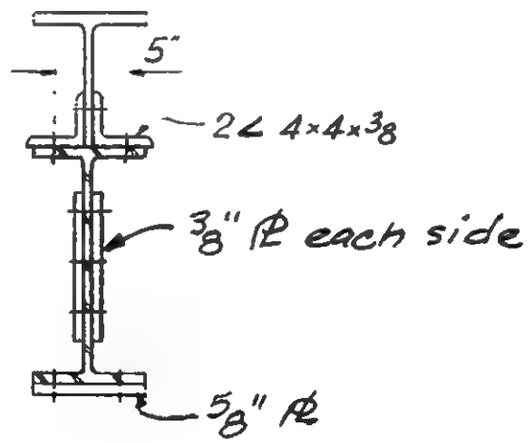

404A

LICENSED PROFESSIONAL ENGINEER
LESLIE E. ROBERTSON
No. 34360
UNIVERSITY OF THE STATE OF NEW YORK

6-AB2-82

WORTHINGTON, SKILLING, HELLE & JACKSON — Civil & Structural Engineers

PROJECT THE WORLD TRADE CENTER | TITLE SPLICE DETAILS 410A – 412A, 420A – 425A | DATE 8-5-67

REVISIONS

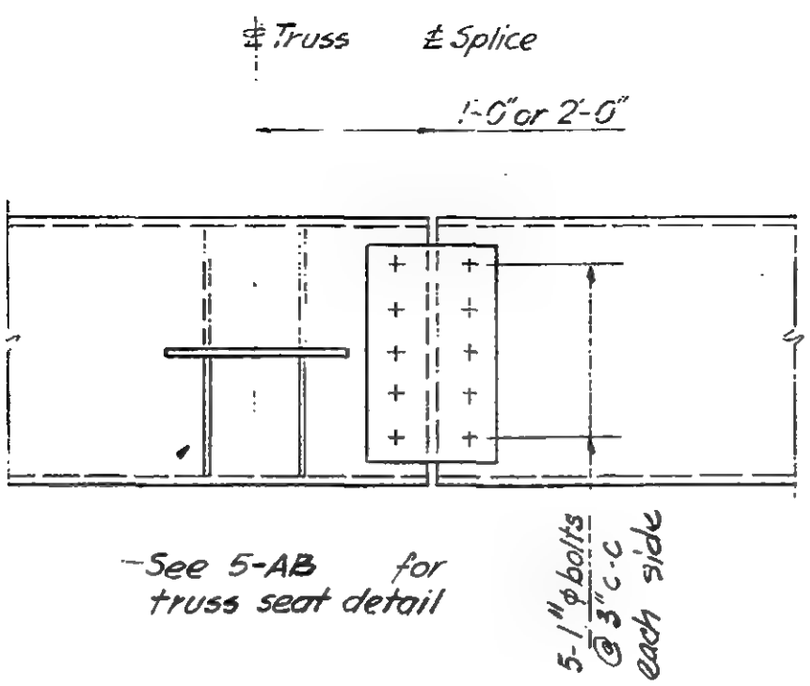

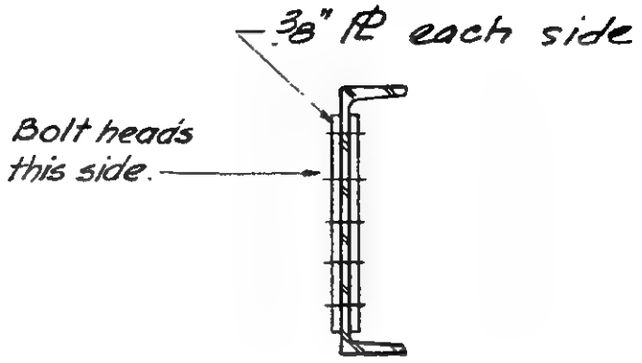

410A, 411A, 412A

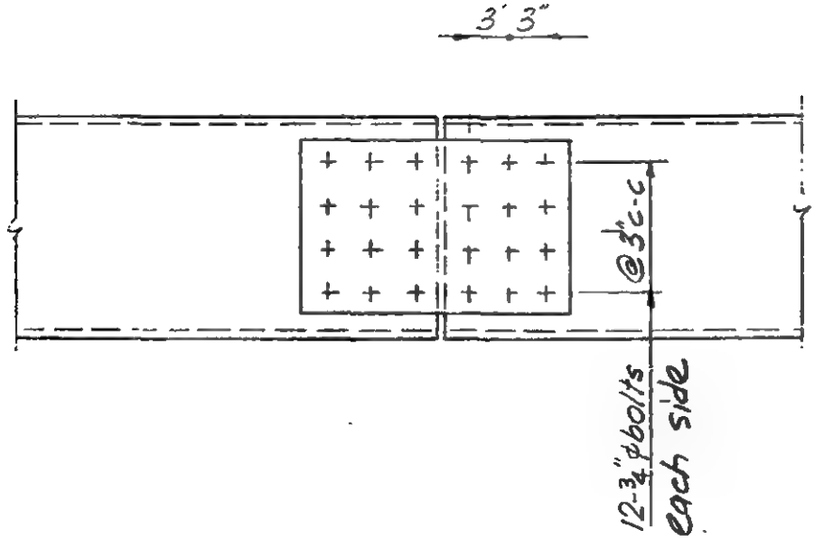

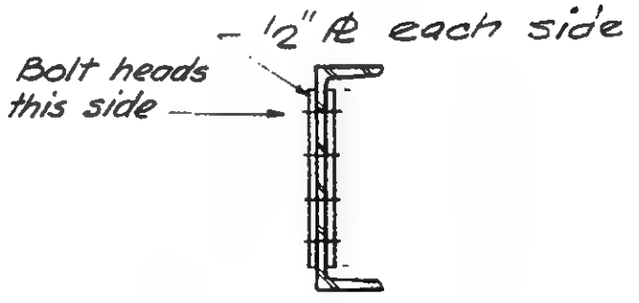

420A, 421A, 422A, 423A, 424A, 425A

LICENSED PROFESSIONAL ENGINEER LESLIE E. ROBERTSON NO. 34300 STATE OF OREGON

6-AB2-83

SKILLING - HELLE - CHRISTIANSEN - ROBERTSON Structural & Civil Engineers

PROJECT THE WORLD TRADE CENTER | TITLE SPLICE DETAIL 411B, 410B | DATE 1-24-68

REVISIONS

7-17-68

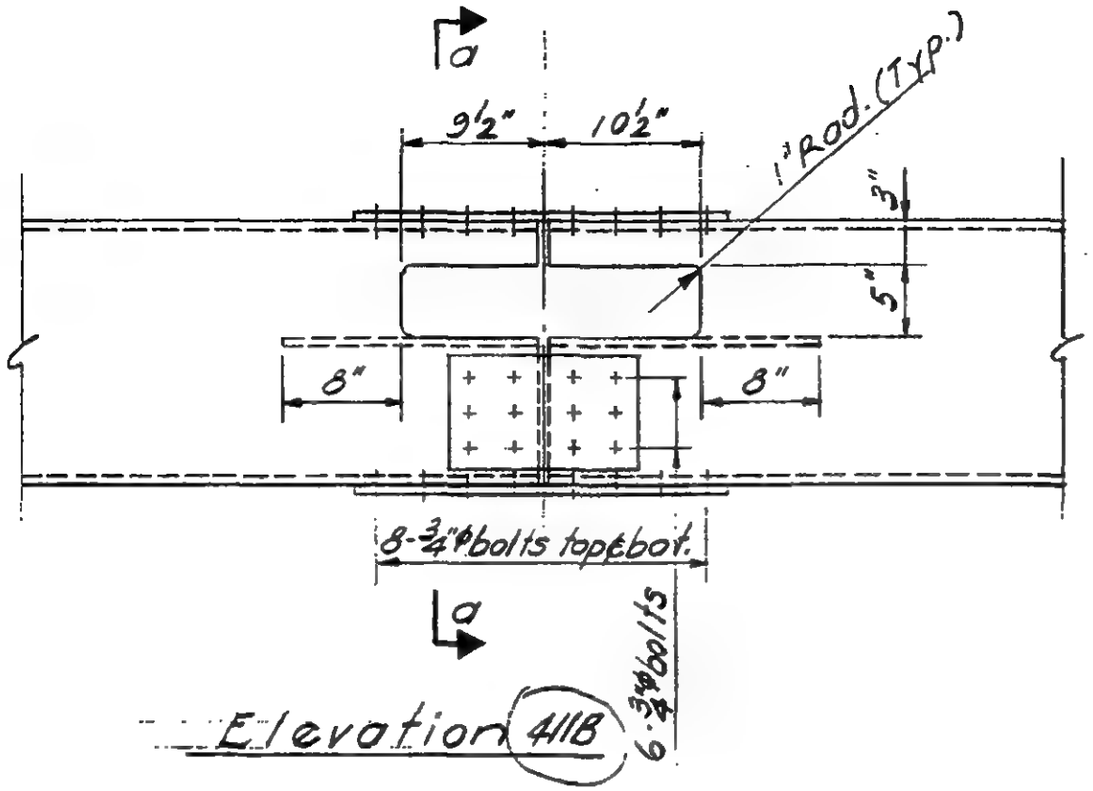

Elevation 411B

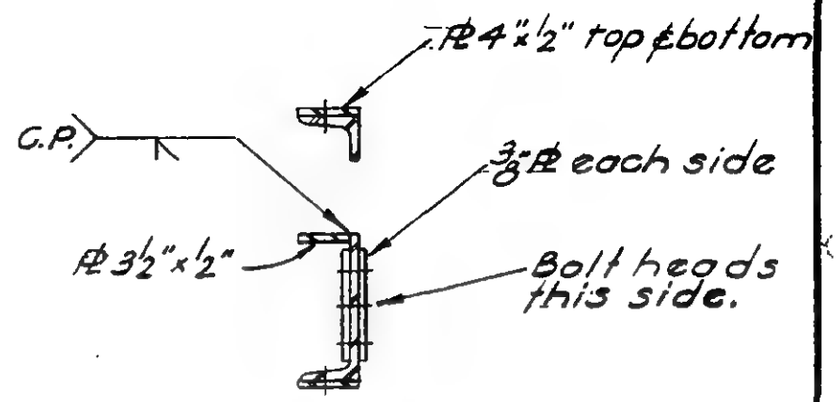

Section a-a

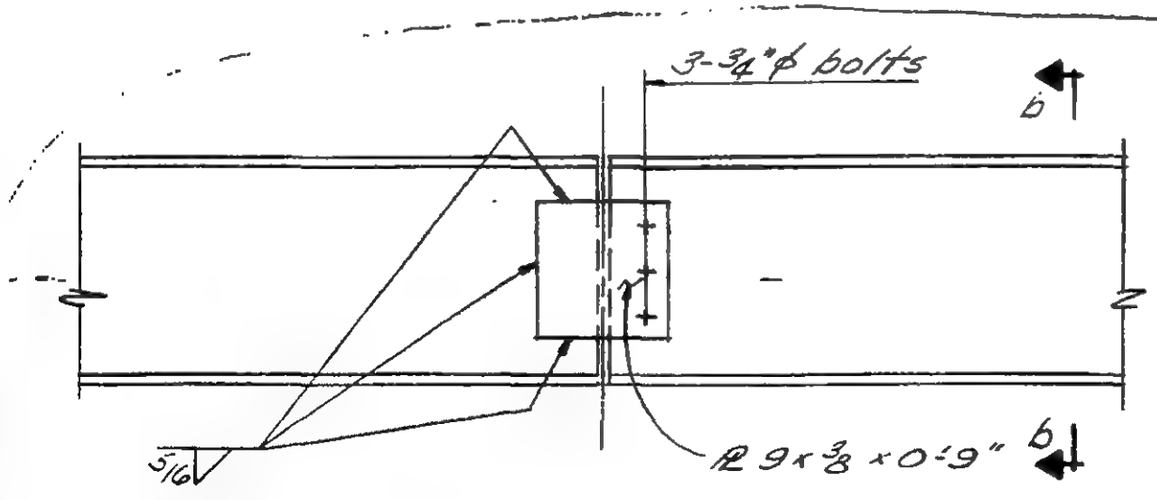

ELEVATION 410B

Section b-b

LICENSED PROFESSIONAL ENGINEER
LESLIE E. ROBERTSON
No. 34360
UNIVERSITY OF THE STATE OF NEW YORK

6-AB2-83.1

SKILLING - HELLE - CHRISTIANSEN - ROBERTSON Structural & Civil Engineers

PROJECT THE WORLD TRADE CENTER | TITLE SPLICE DETAIL 419A(B), 449A | DATE 8-5-67

REVISIONS

0-2-67

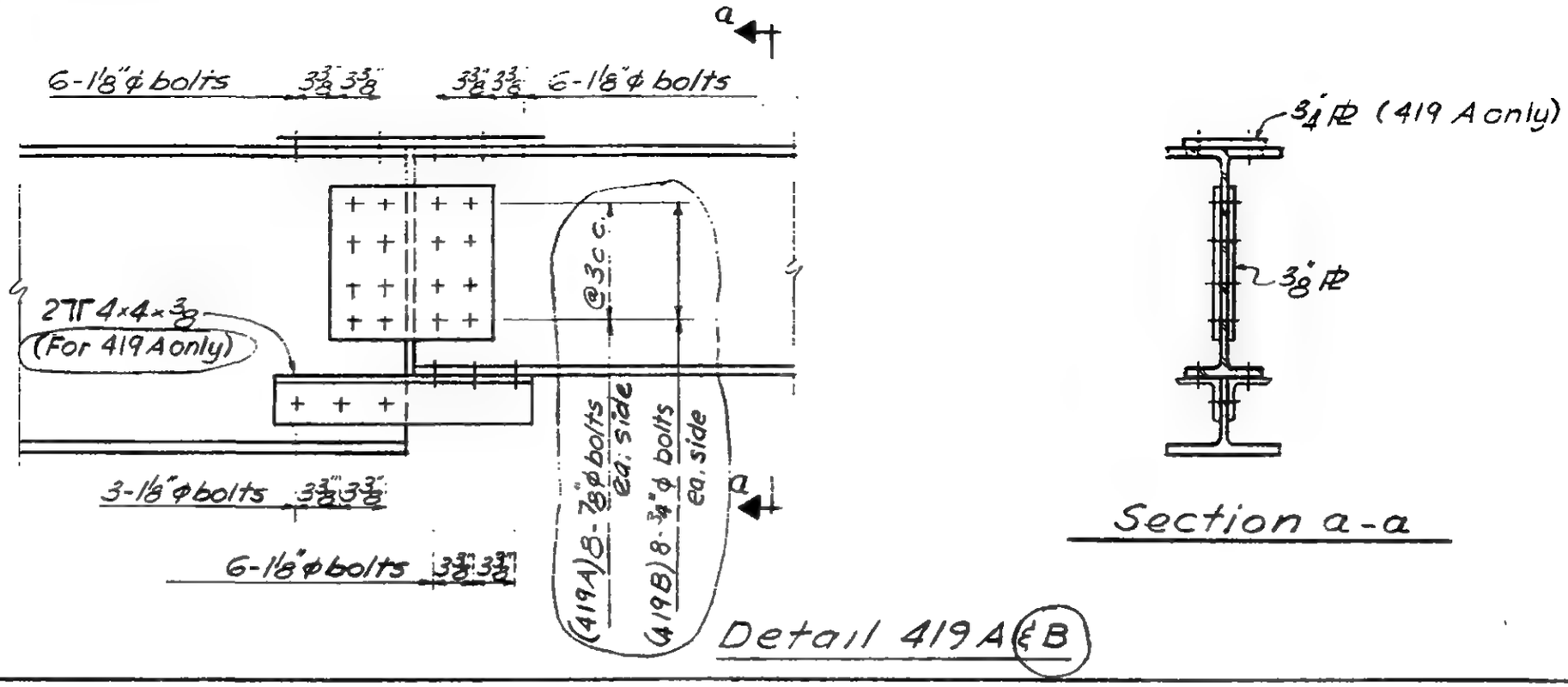

Section a-a

Detail 419A & B

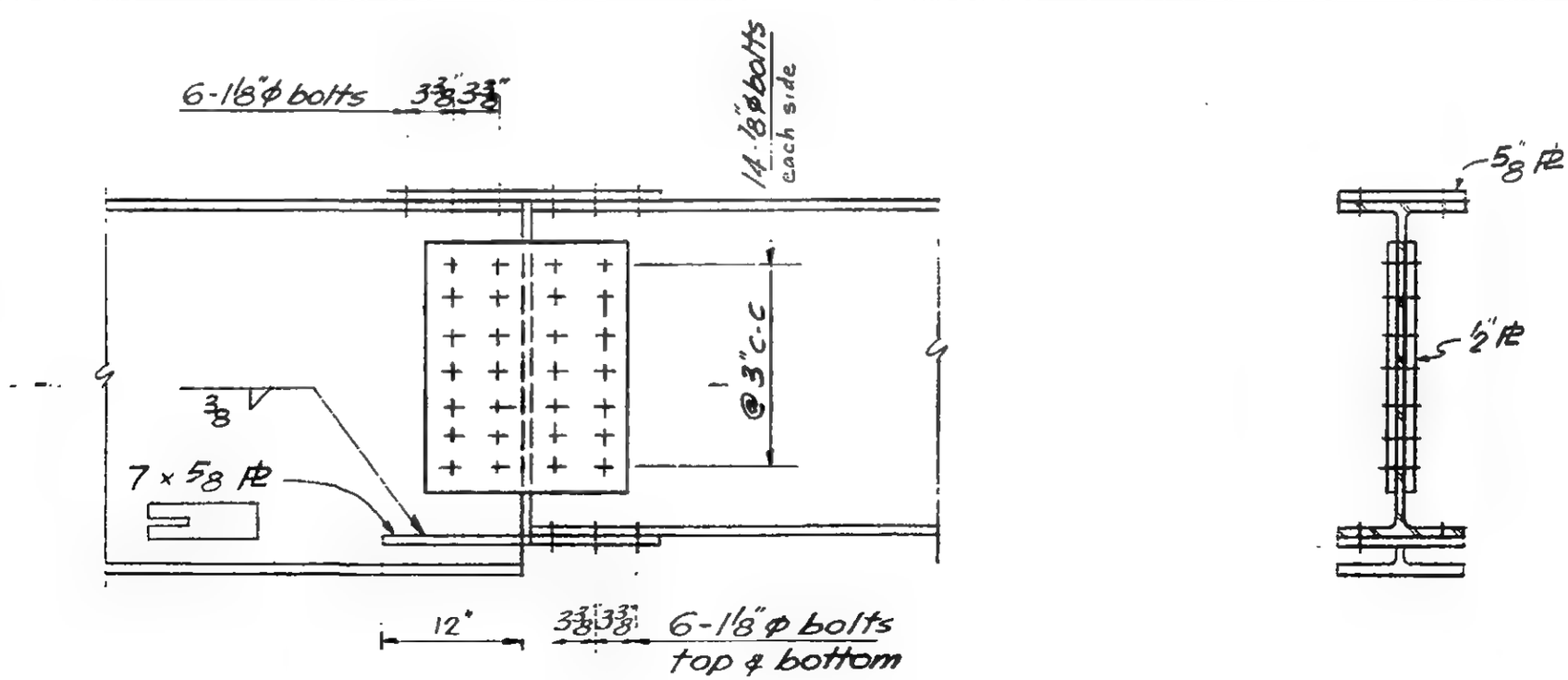

Detail 449A

6-AB2-84

LICENSED PROFESSIONAL ENGINEER LESLIE E. ROBERTSON No. 34360 UNIVERSITY OF THE STATE OF NEW YORK

SKILLING - HELLE - CHRISTIANSEN - ROBERTSON Structural & Civil Engineers

PROJECT THE WORLD TRADE CENTER | TITLE SPLICE DETAIL 418 A, B. | DATE 8-14-67

REVISIONS

1 5-2-67

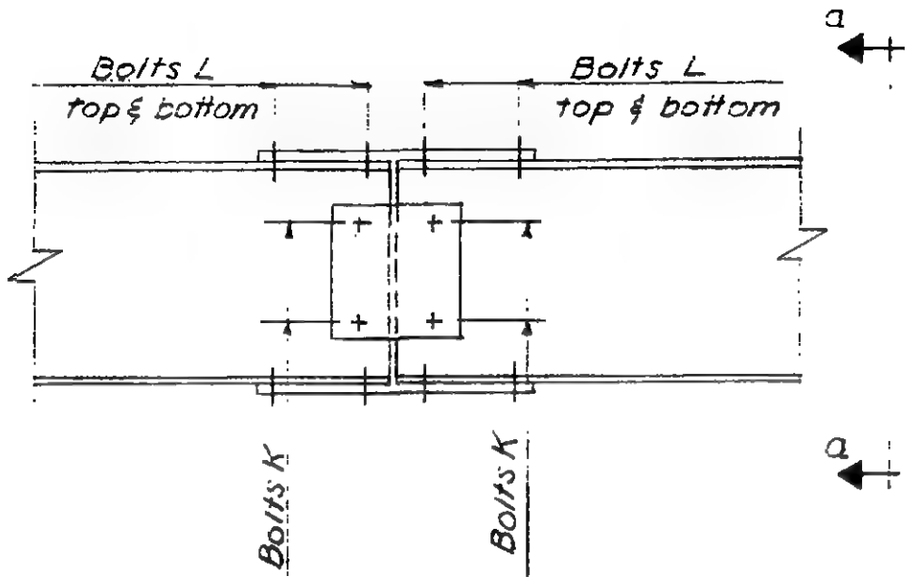

Elevation

SCHEDULE

	418A	418B
BOLTS		
K	3-7/8" ϕ	4-3/4" ϕ
L	6-7/8" ϕ	—
PLATES		
P	3/8"	3/8"
Q	5/8"	—

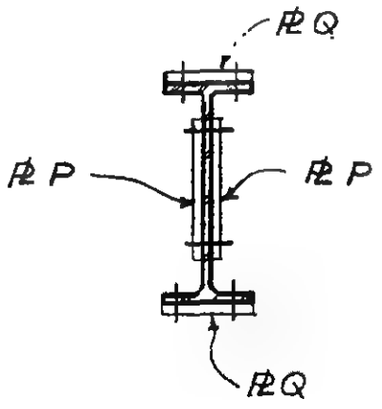

Section a-a

LICENSED PROFESSIONAL ENGINEER
LESLIE E. ROBERTSON
No. 34360
UNIVERSITY OF THE STATE OF NEW YORK

6-AB2-85

SKILLING, HELLE, CHRISTIANSEN, ROBERTSON — Structural & Civil Engineers

PROJECT THE WORLD TRADE CENTER | TITLE DETAIL 418 C | DATE 9. 25. 68.

REVISIONS

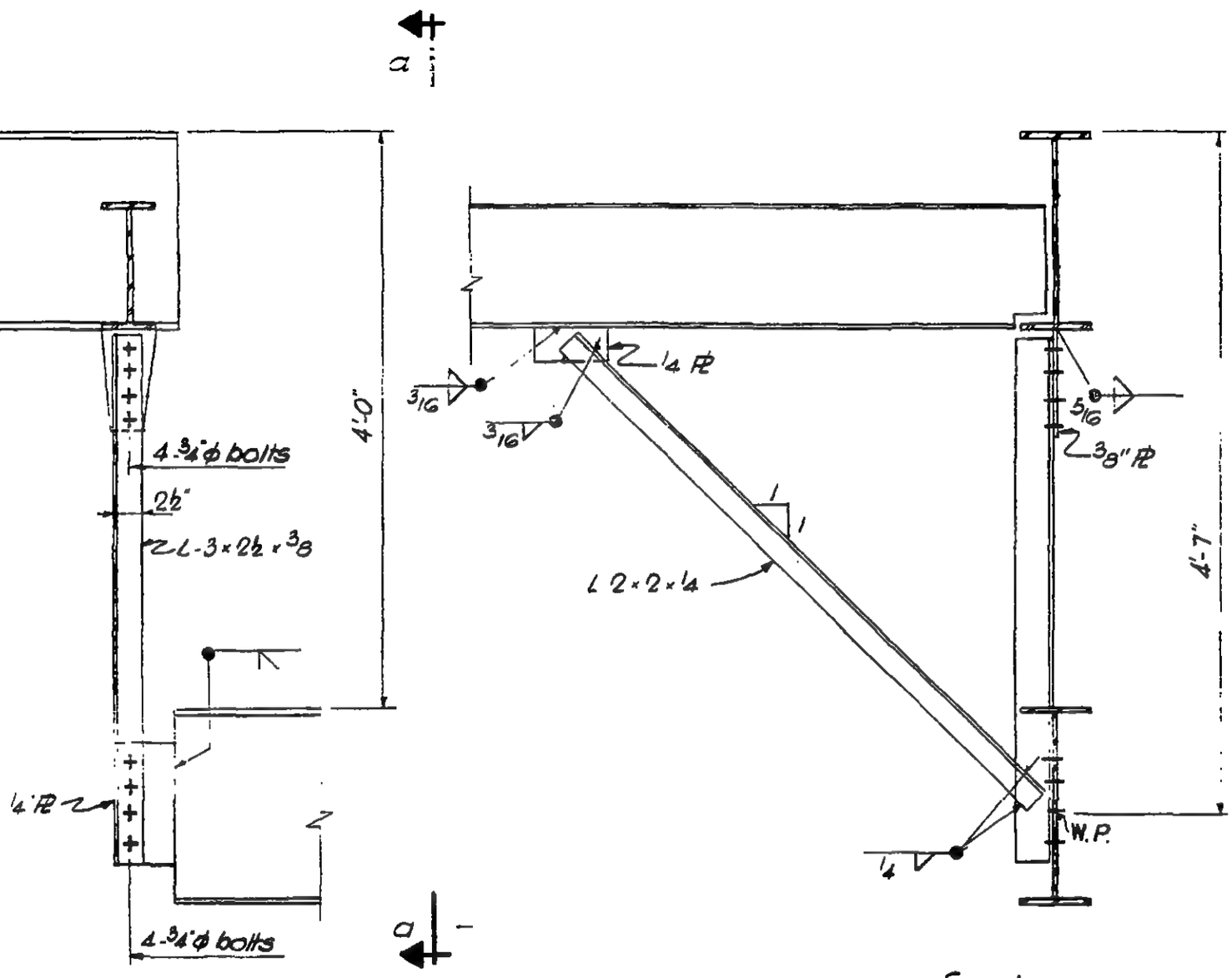

Elevation

Section a-a

LICENSED PROFESSIONAL ENGINEER — LESLIE E. ROBERTSON — No. 34360 — UNIVERSITY OF THE STATE OF NEW YORK

DESIGNED

DRAWN

G.T.H.

REVIEWED

6-AB2-85.1

SKILLING, HELLE, CHRISTIANSEN, ROBERTSON — Structural & Civil Engineers

PROJECT THE WORLD TRADE CENTER | TITLE DETAILS 418 D, E | DATE 9. 25. 68.

REVISIONS

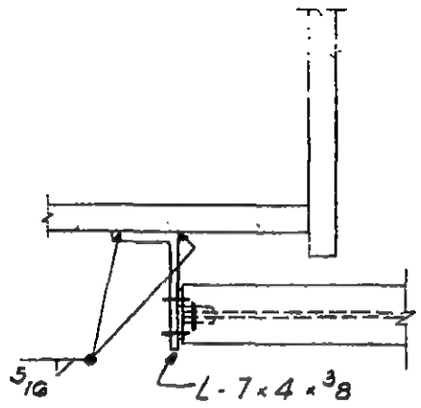

Plan

Detail 418 D

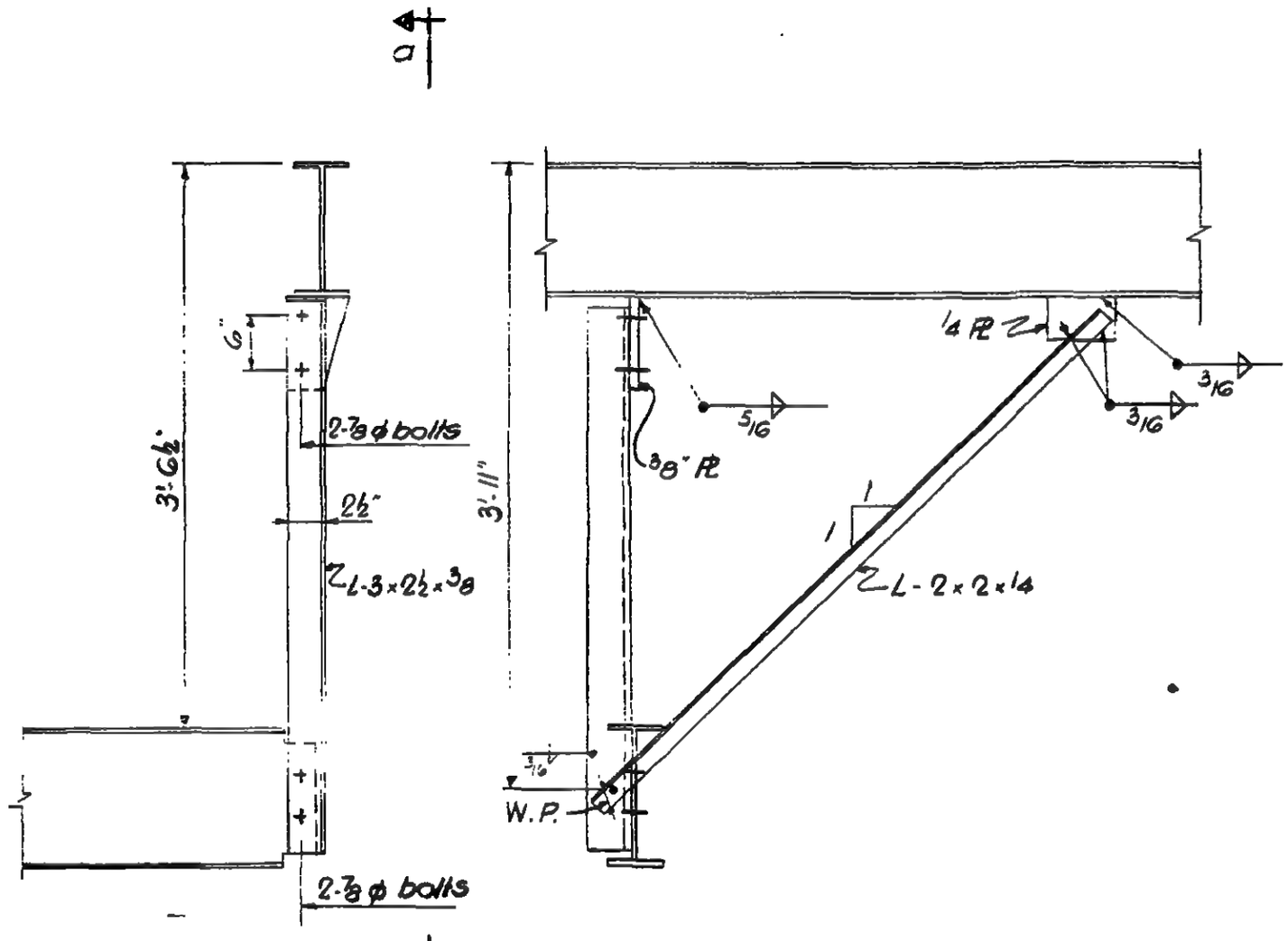

Elevation

Section a-a

Detail 418 E

LICENSED PROFESSIONAL ENGINEER — LESLIE E. ROBERTSON — No. 34360 — UNIVERSITY OF THE STATE OF NEW YORK

DESIGNED

DRAWN

G.T.H.

REVIEWED

6-AB2-85.2

SKILLING - HELLE - CHRISTIANSEN - ROBERTSON Structural & Civil Engineers

PROJECT THE WORLD TRADE CENTER | TITLE SPLICE CONNECTION 426A, 427A, 428A & 429A | DATE 9-15-67

REVISIONS

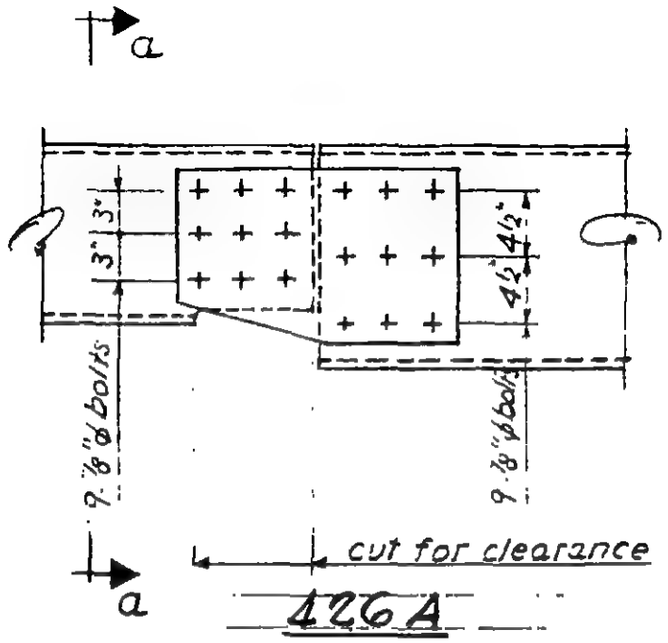

426A

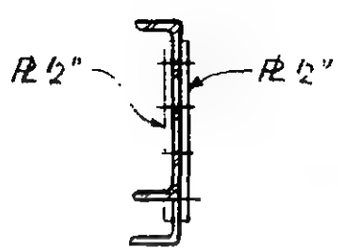

Section a-a

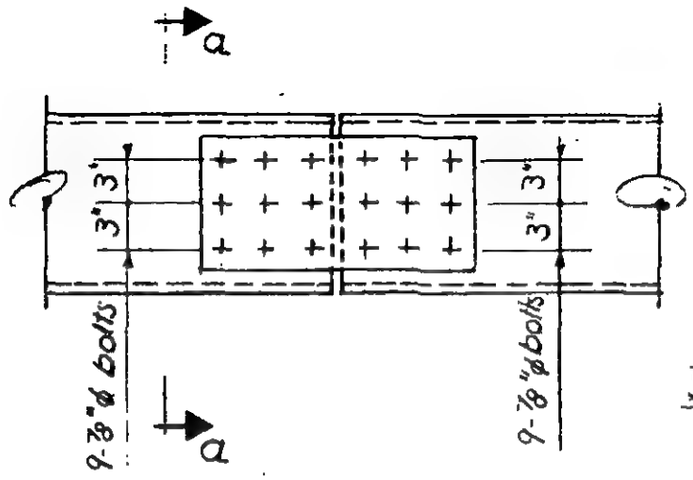

428A

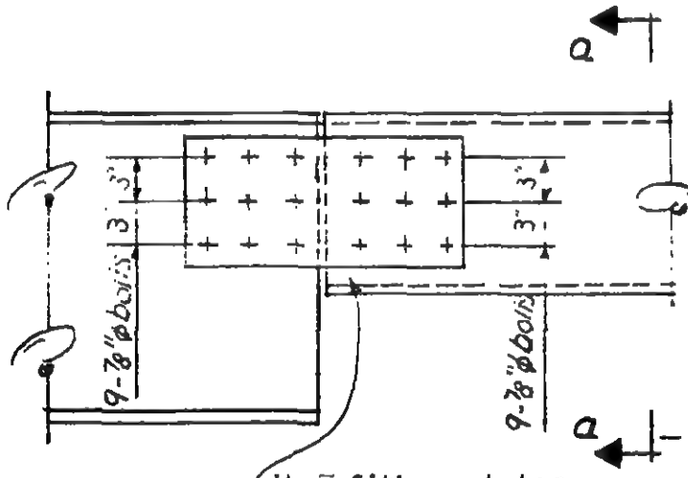

Section a-a

427A

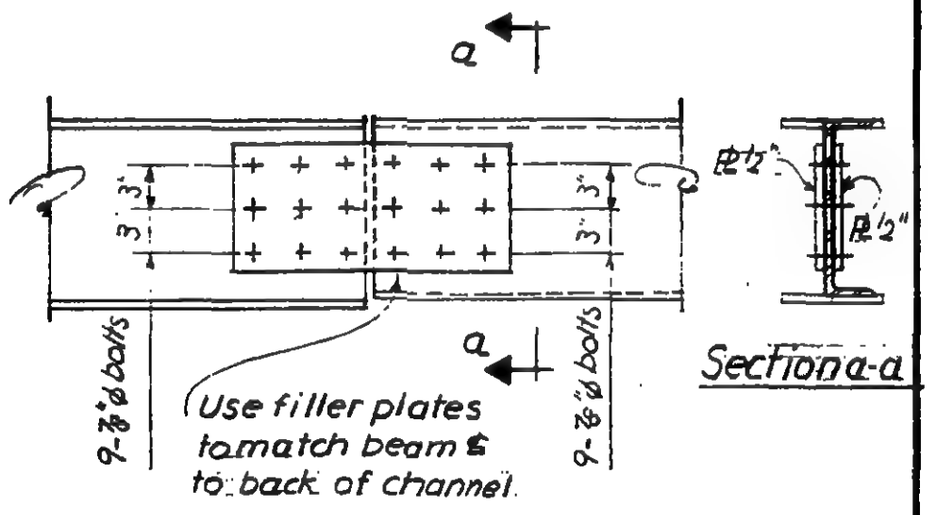

429A

G-AB2-86

SKILLING - HELLE - CHRISTIANSEN - ROBERTSON Structural & Civil Engineers

PROJECT THE WORLD TRADE CENTER | TITLE. SPLICE CONNECTION 427 B | DATE 12-21-67

REVISIONS

2-12-68

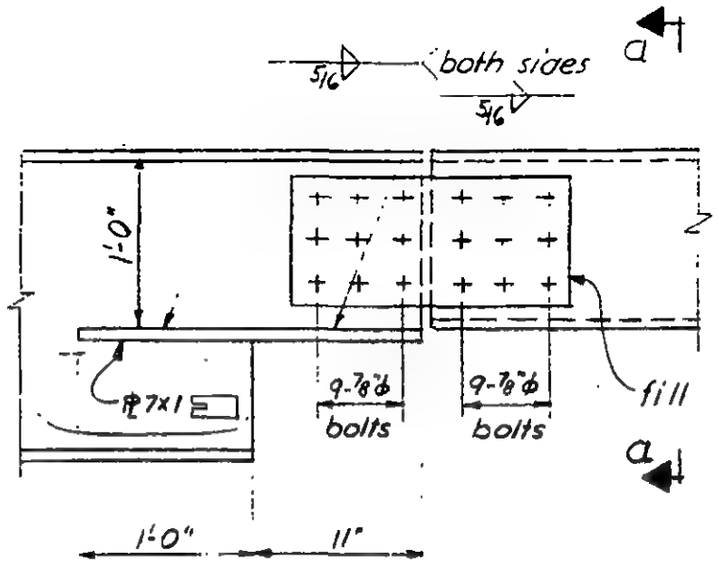

427 B

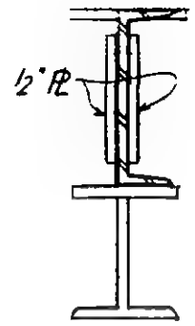

Section a-a

LICENSED PROFESSIONAL ENGINEER
LESLIE E. ROBERTSON
No. 34360
UNIVERSITY OF THE STATE OF NEW YORK

6-AB2-86.1

SKILLING - HELLE - CHRISTIANSEN - ROBERTSON — Structural & Civil Engineers

PROJECT THE WORLD TRADE CENTER | TITLE SPLICE CONNECTION 407A, B | DATE 9-15-67

REVISIONS

10-2-67

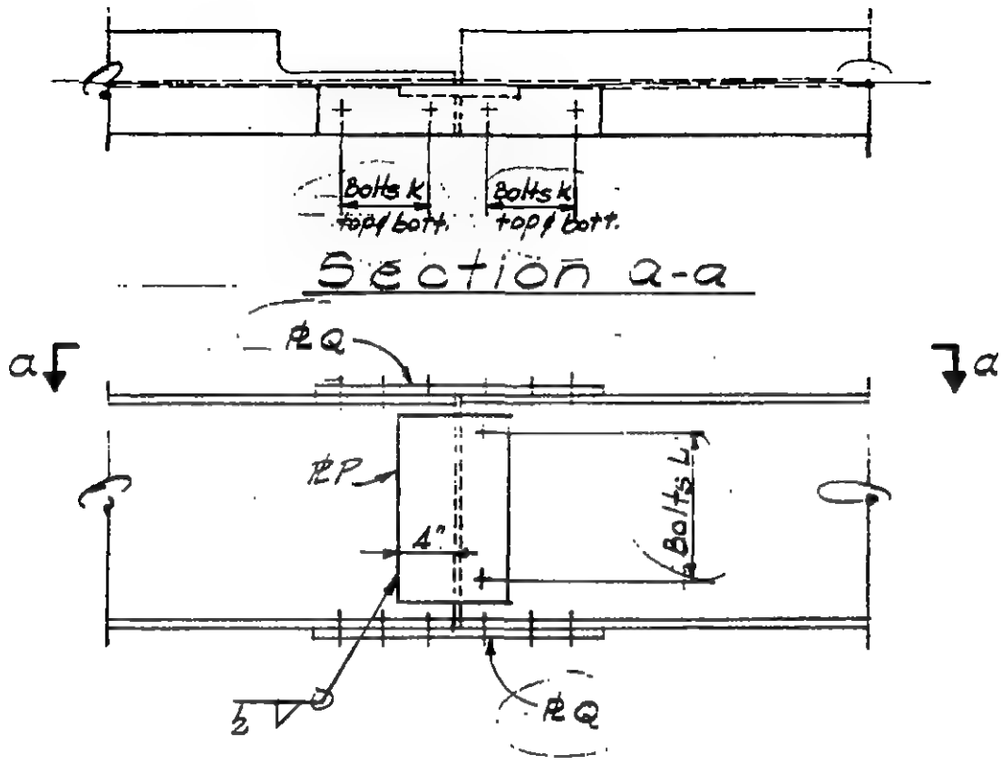

ELEVATION

SCHEDULE		
	407A	407B
BOLTS		
K	3-⅞ ϕ	4-1" ϕ
L	5-⅞" ϕ	7-⅞" ϕ
PLATES		
P	½"	½"
Q	½"	¾"

LICENSED PROFESSIONAL ENGINEER LESLIE E. ROBERTSON No. 34360 UNIVERSITY OF THE STATE OF NEW YORK

G-AB2-87

SKILLING - HELLE - CHRISTIANSEN - ROBERTSON Structural & Civil Engineers

PROJECT THE WORLD TRADE CENTER | TITLE CONNECTION DETAIL 438 | DATE 10-2-67

REVISIONS

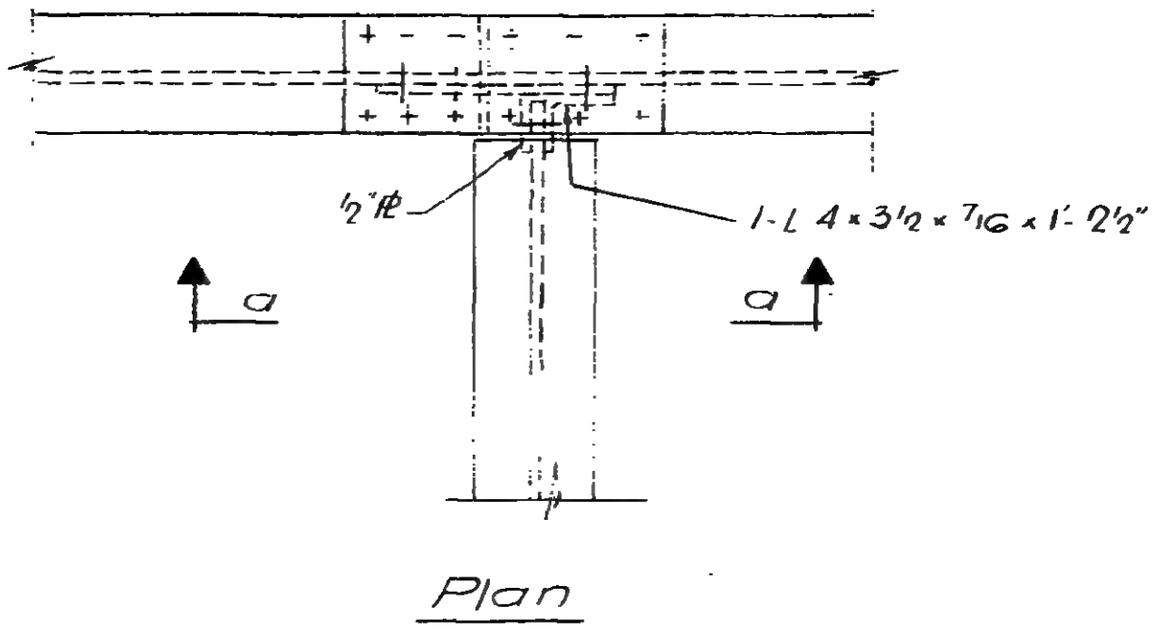

Plan

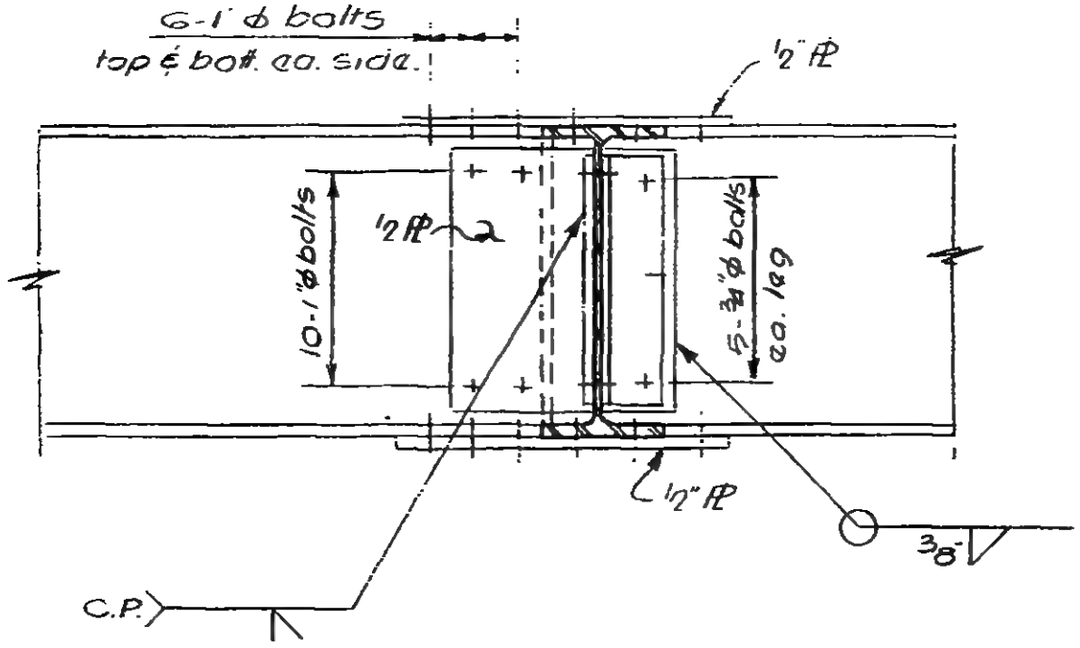

Section a-a

LICENSED PROFESSIONAL ENGINEER
LESLIE E. ROBERTSON
NEW YORK

G-AB2-88

SKILLING - HELLE - CHRISTIANSEN - ROBERTSON Structural & Civil Engineers

PROJECT THE WORLD TRADE CENTER | TITLE SPLICE DETAIL 433 A & B | DATE 8-14-67

REVISIONS

D-2-67

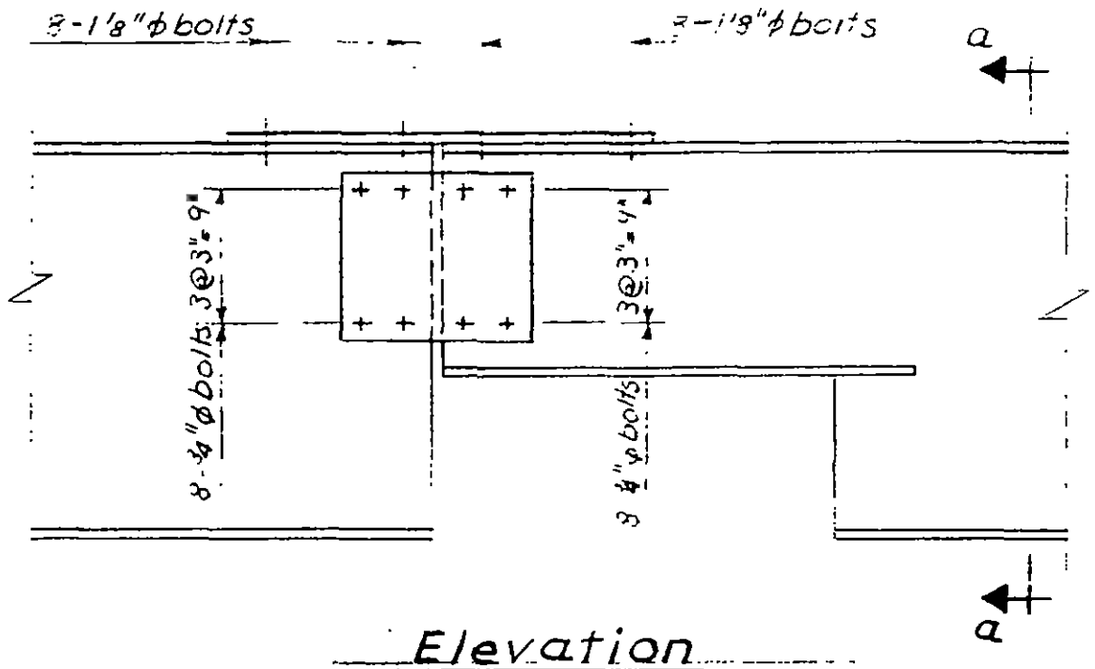

Elevation
Detail 433 A

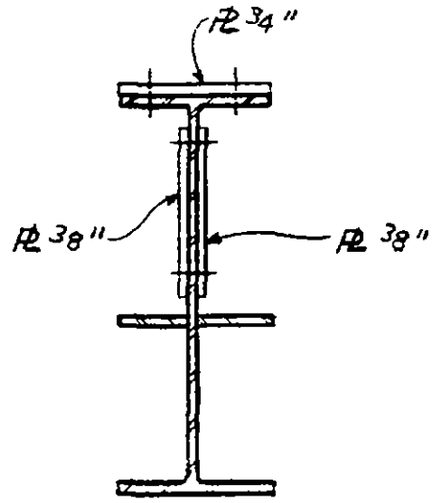

Section a-a

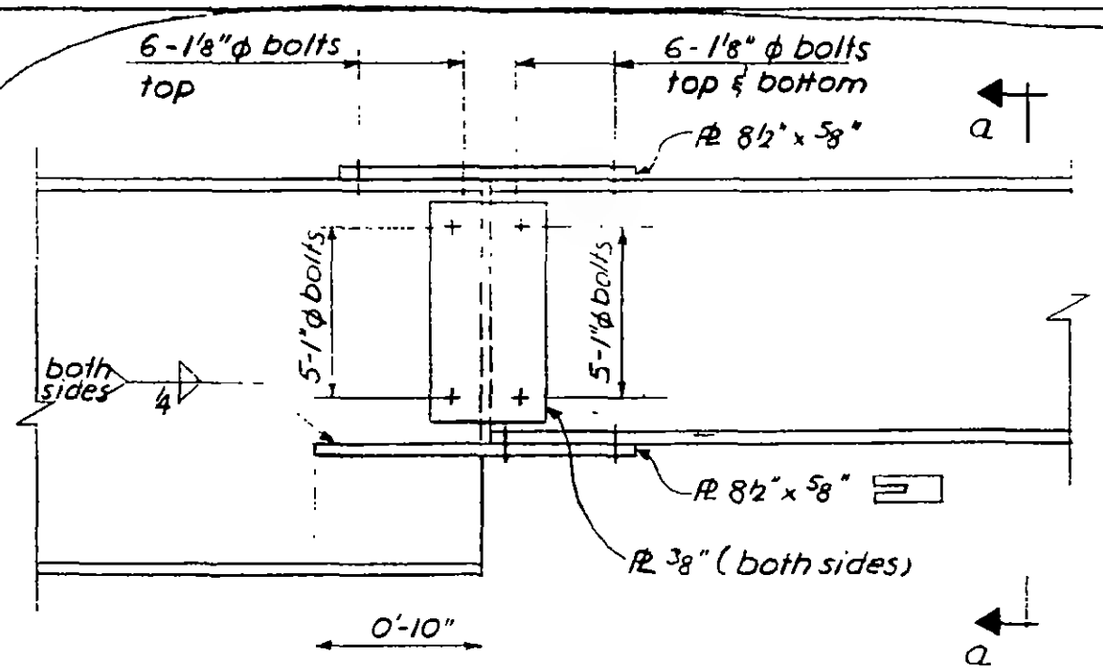

Elevation
Detail 433 B

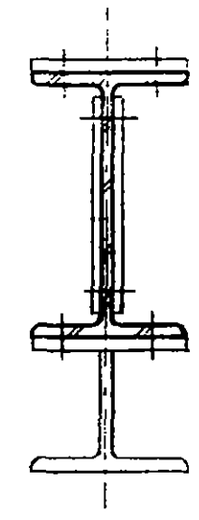

Section a-a

LICENSED PROFESSIONAL ENGINEER
LESLIE E. ROBERTSON
No. 34360
UNIVERSITY OF THE STATE OF NEW YORK

6-AB2-89

SKILLING - HELLE - CHRISTIANSEN - ROBERTSON — Structural & Civil Engineers

PROJECT THE WORLD TRADE CENTER | TITLE SPLICE DETAILS 431A, 435A,B, 436A, 437A 439A | DATE 6-30-67

REVISIONS

8-5-67
9-15-67
10-2-67
10-5-67

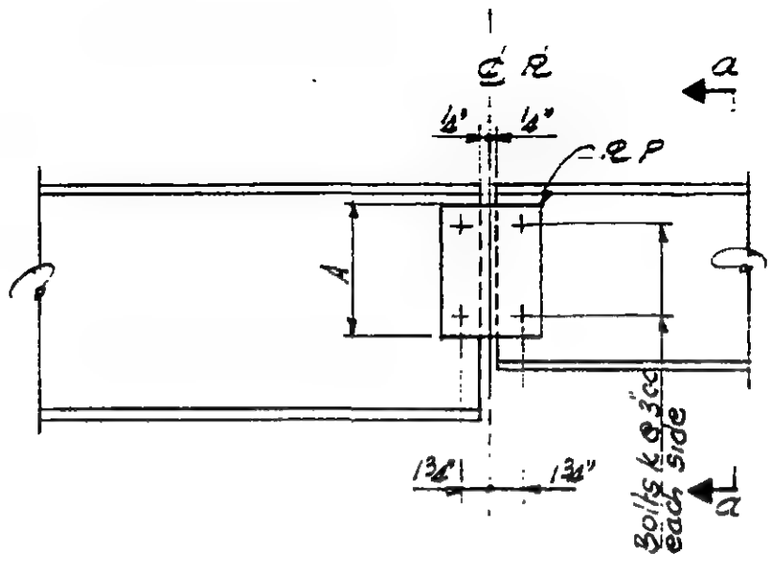

435A, 436A & 439A

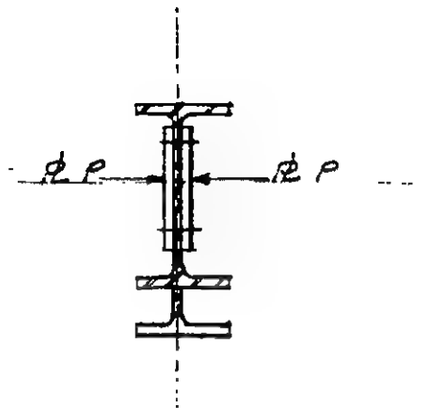

Section a-a

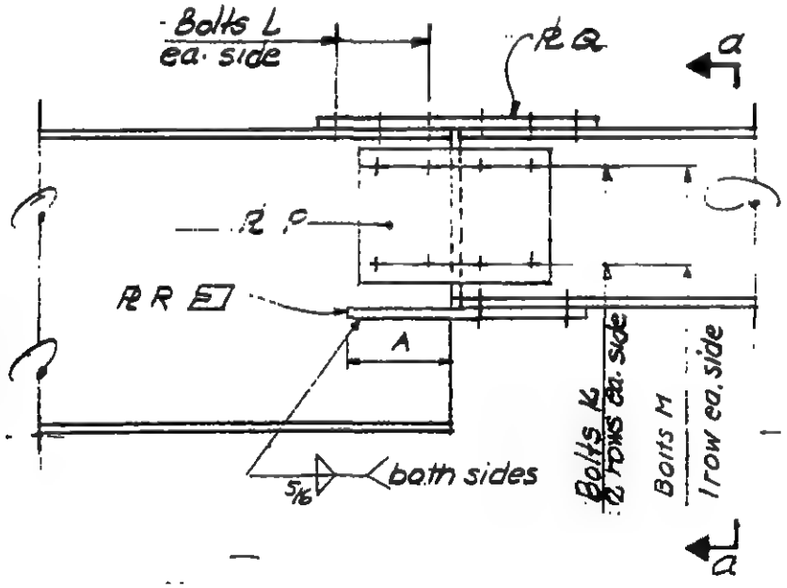

431A · 435B, 437A

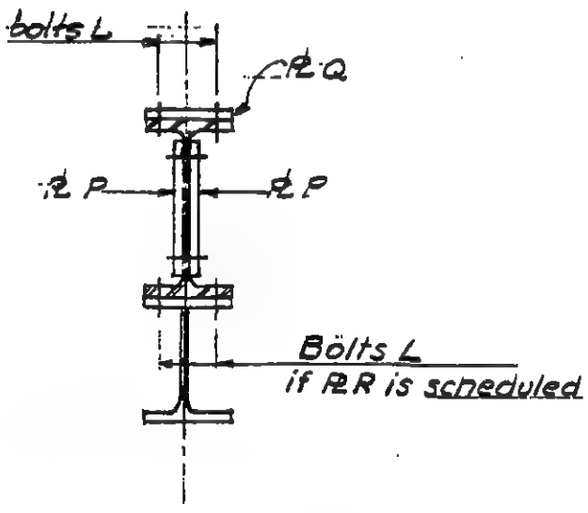

Section a-a

LICENSED PROFESSIONAL ENGINEER
LESLIE E. ROBERTSON
No. 34360
UNIVERSITY OF THE STATE OF NEW YORK

G-AB2-90

SKILLING - HELLE - CHRISTIANSEN - ROBERTSON Structural & Civil Engineers

PROJECT THE WORLD TRADE CENTER | TITLE SCHEDULE FOR DETAIL 436A, 435A, 435B & 439A 437A 431A | DATE 6-30-67

REVISIONS
3-5-67
10-2-67
10-5-67

	436A	435A	435B	439A	437A	431A
PLATES						
P	5½" x ⅜" x 0'-6"	6" x ⅜" x 0'-9"	⅜"	⅜"	⅜"	⅜"
Q	—	—	½"	—	½"	¾"
R	—	—	—	—	½"	¾"
DIMENSIONS						
A	5½"	0'-9"	—	—	0'-10"	1'-0"
BOLTS						
K	2-¾" ϕ (A325)	3-¾" ϕ (A325)	6-⅞" ϕ	6-¾" ϕ	—	—
L	—	—	6-⅞" ϕ	—	6-1" ϕ	6-1⅛" ϕ
M	—	—	—	—	5-¾" ϕ	8-¾" ϕ

LICENSED PROFESSIONAL ENGINEER LESLIE E. ROBERTSON No. 34360 UNIVERSITY OF THE STATE OF NEW YORK

G-AB2-90.1

SKILLING - HELLE - CHRISTIANSEN - ROBERTSON Structural & Civil Engineers

PROJECT THE WORLD TRADE CENTER | TITLE SPLICE DETAIL 435C | DATE 12-21-67

REVISIONS

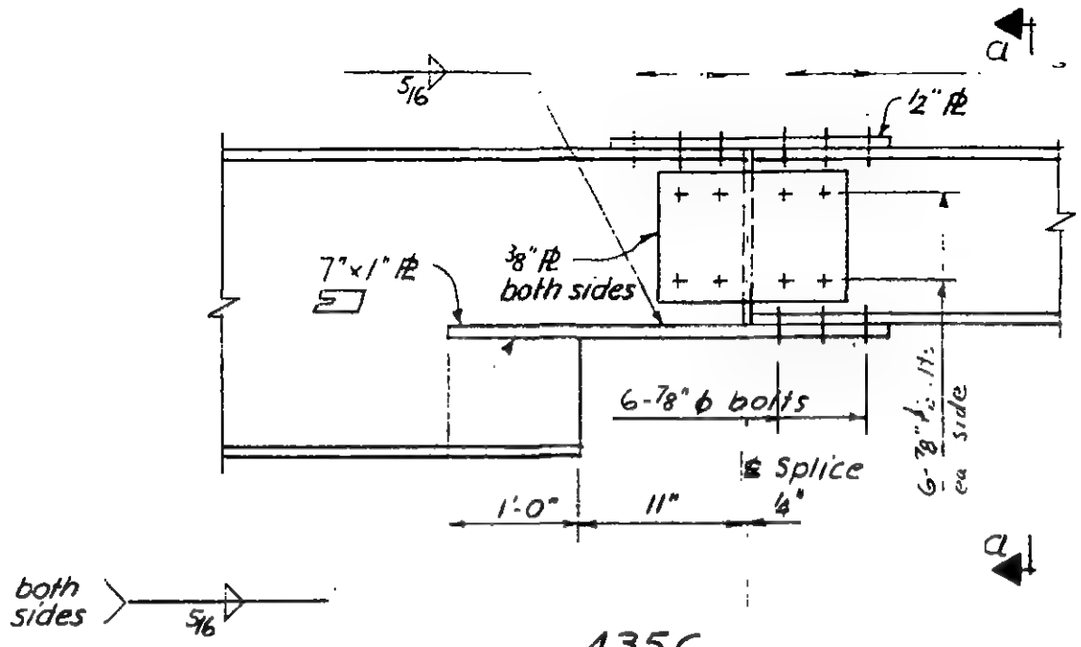

435C

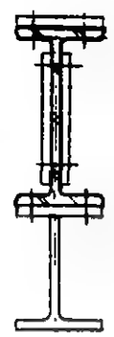

Section a-a

LICENSED PROFESSIONAL ENGINEER
LESLIE E. ROBERTSON
No. 34360
UNIVERSITY OF THE STATE OF NEW YORK

6-AB2-90.2

SKILLING - HELLE - CHRISTIANSEN - ROBERTSON Structural & Civil Engineers

PROJECT THE WORLD TRADE CENTER | TITLE SPLICE CONNECTION 140A, 441A, 442A, 443A | DATE 9-15-67

REVISIONS
10-5-67
11-17-67

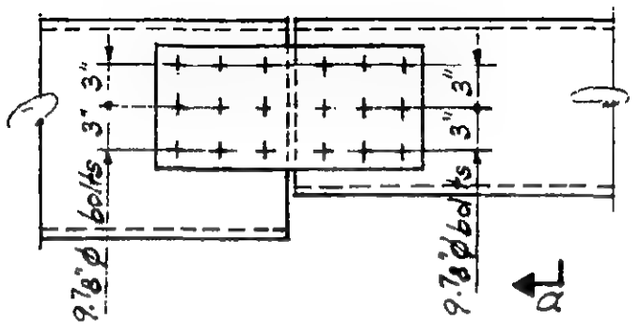

442 A

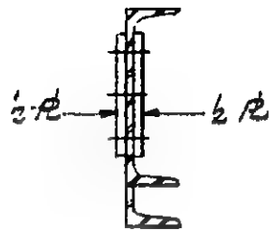

Section a-a

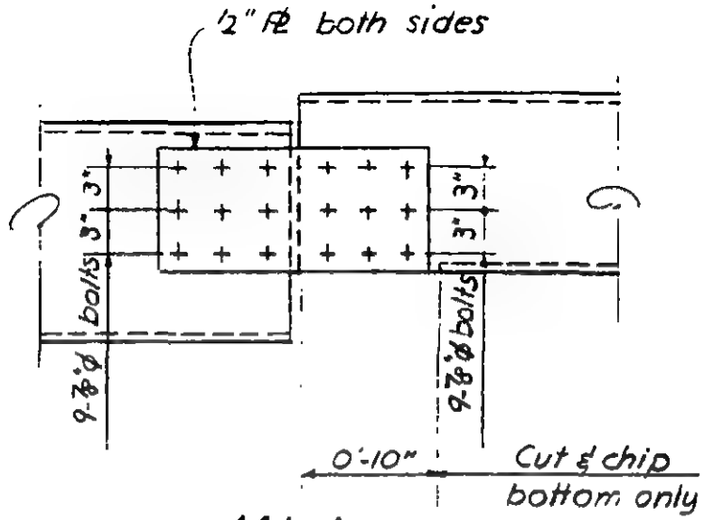

441 A

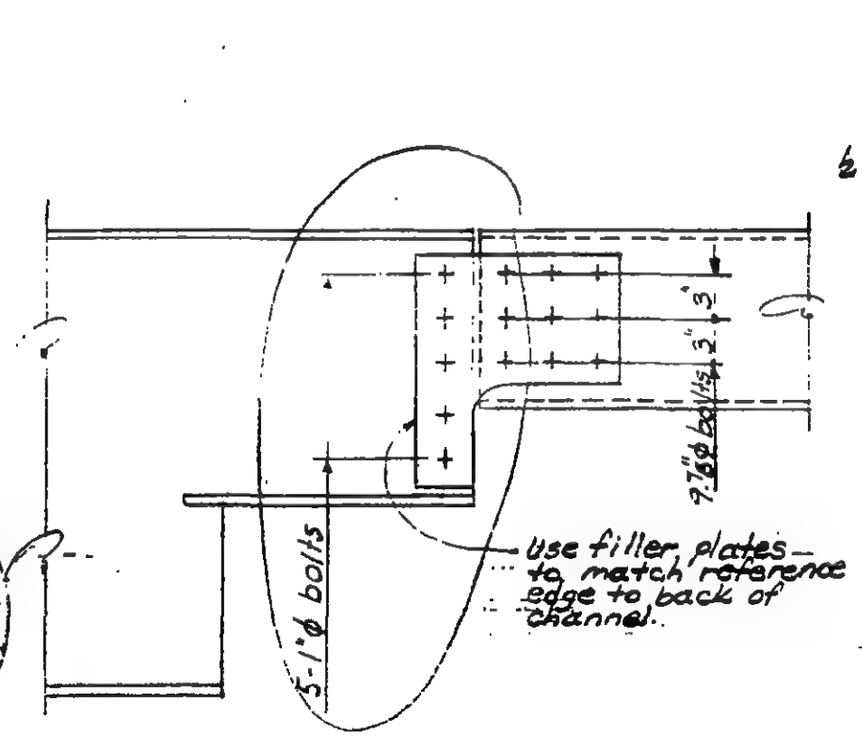

443 A

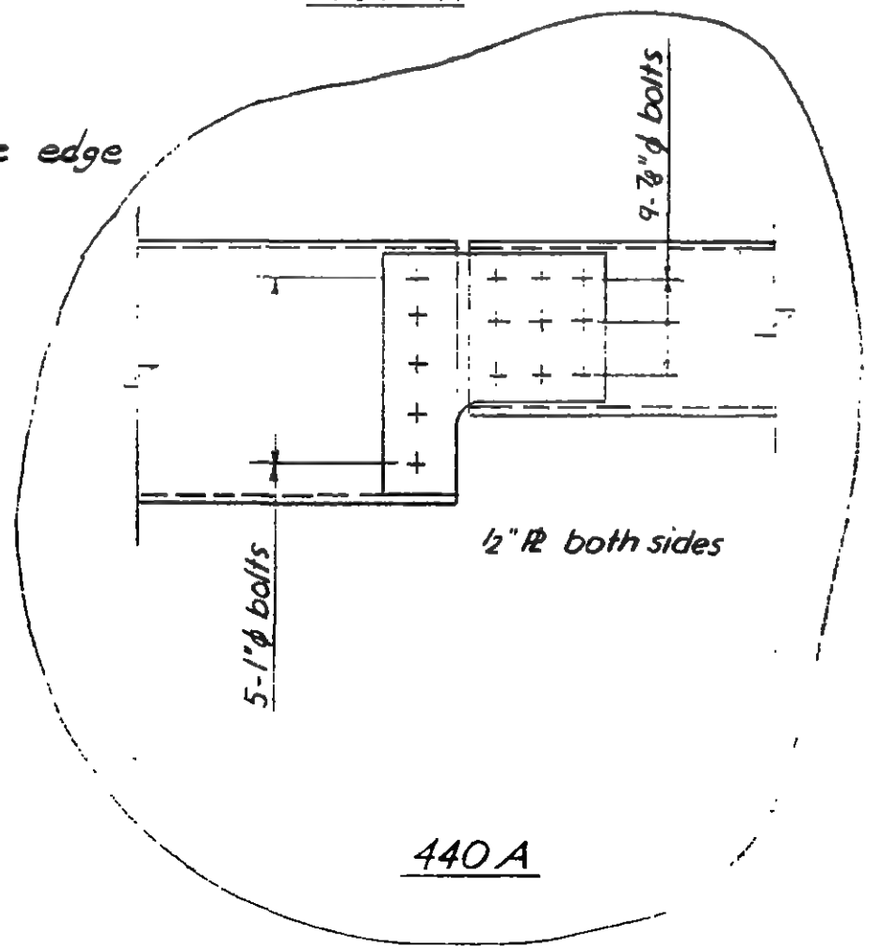

440 A

LICENSED PROFESSIONAL ENGINEER
LESLIE E. ROBERTSON
No. 34360
UNIVERSITY OF THE STATE OF NEW YORK

6-AB2-91

SKILLING - HELLE - CHRISTIANSEN - ROBERTSON Structural & Civil Engineers

PROJECT THE WORLD TRADE CENTER | TITLE SPLICE CONNECTION DETAIL 440B, 441B | DATE 11-17-67

REVISIONS

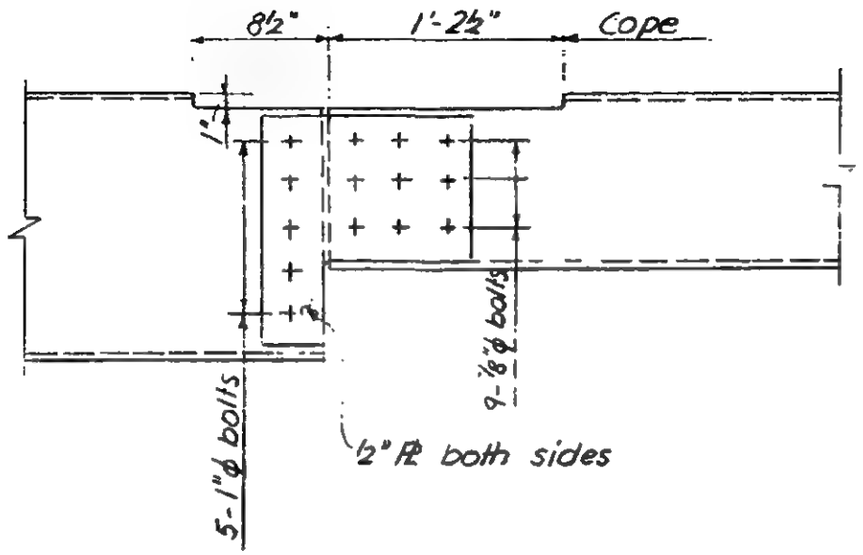

Detail 440B

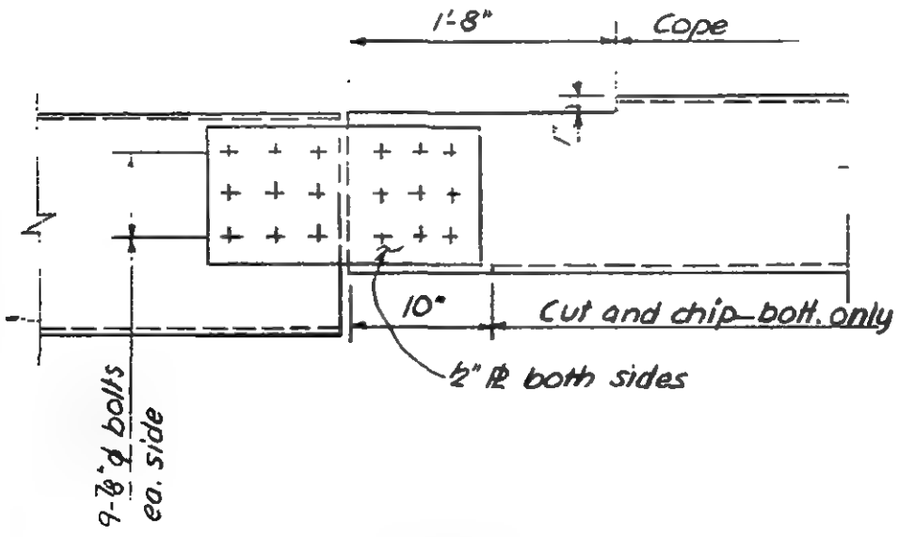

Detail 441B

LICENSED PROFESSIONAL ENGINEER
LESLIE E. ROBERTSON
No. 34560
UNIVERSITY OF THE STATE OF NEW YORK

6-AB2-91.1

WORTHINGTON, SKILLING, HELLE & JACKSON — Civil & Structural Engineers

PROJECT THE WORLD TRADE CENTER | TITLE CONNECTION DETAIL 445 A | DATE 7-5-67

REVISIONS

8-5-67

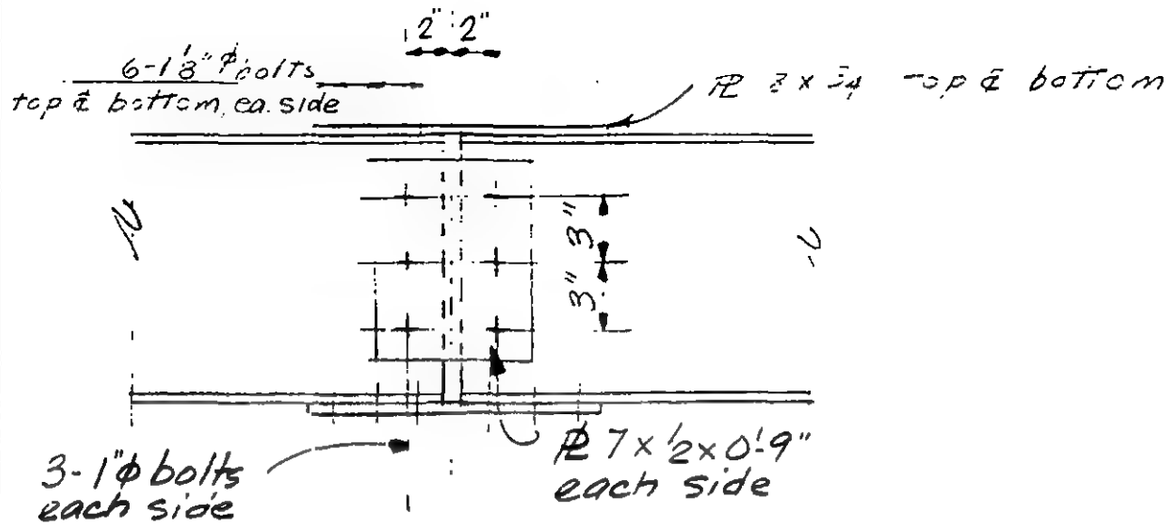

DETAIL 445 A

6-AB2-92

WORTHINGTON, SKILLING, HELLE & JACKSON — Civil & Structural Engineers

PROJECT: THE WORLD TRADE CENTER | TITLE: CONNECTION DETAIL 450 & 464 | DATE: 5-1-67

REVISIONS

6-30-67

8-5-67

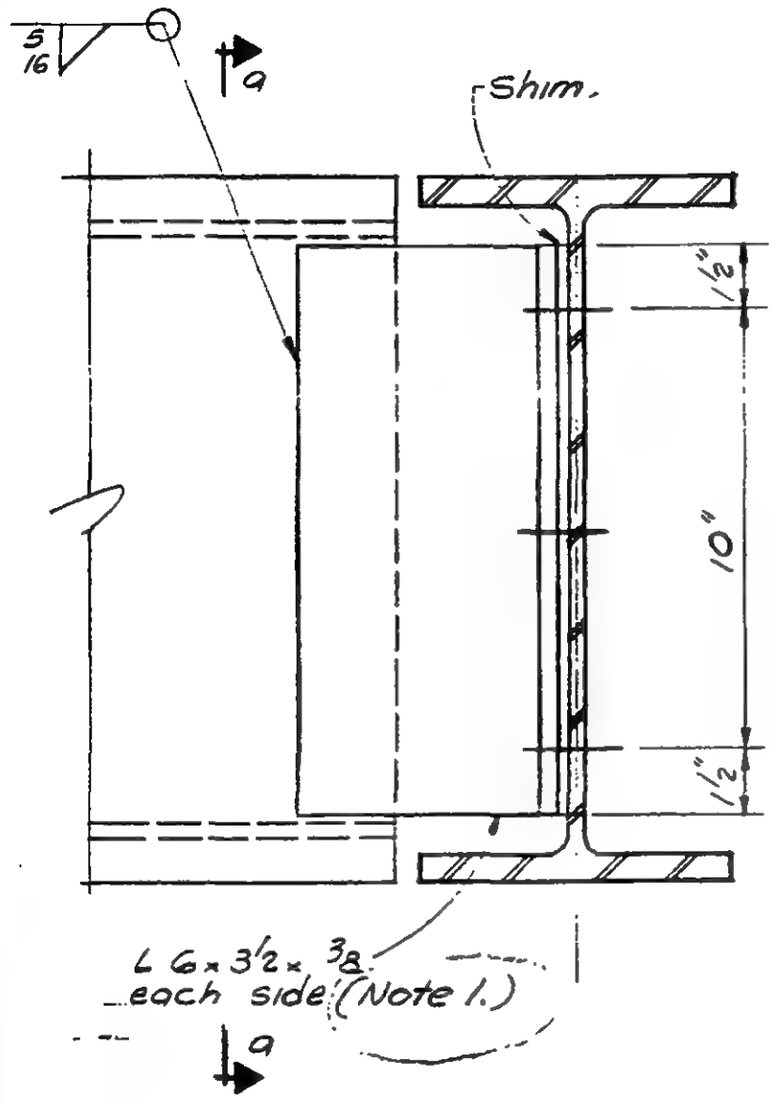

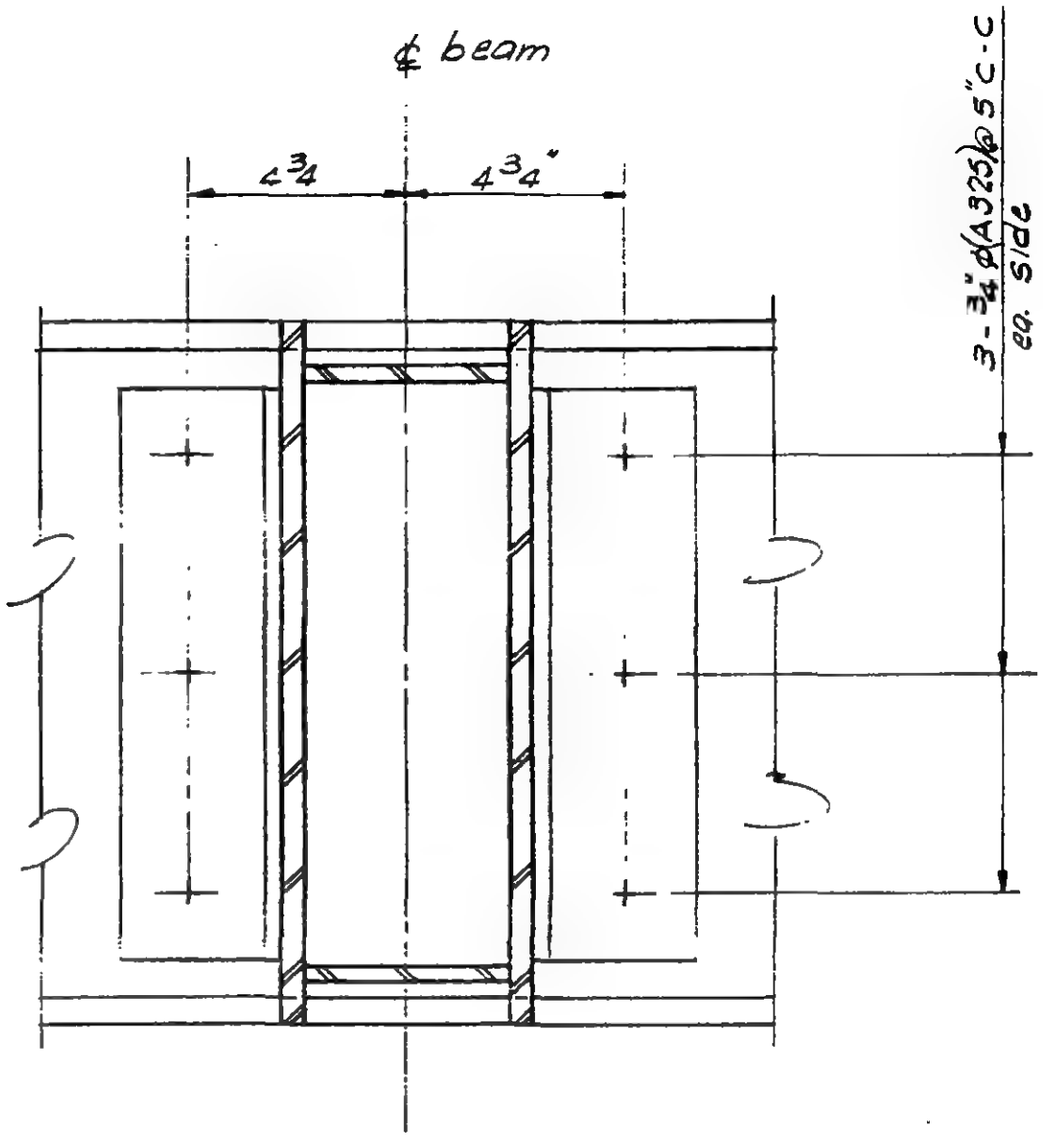

SECTION a-a

Note 1. These angles are modified where detail 175 B is sheduled for far side of beam. (See 6-AB2-77)

LICENSED PROFESSIONAL ENGINEER
LESLIE E. ROBERTSON
No. 34360
UNIVERSITY OF THE STATE OF NEW YORK

6-AB2-101

WORTHINGTON, SKILLING, HELLE & JACKSON — Civil & Structural Engineers

PROJECT THE WORLD TRADE CENTER | TITLE CONNECTION DETAIL 451, 451A | DATE 5-1-67

REVISIONS

6-19-67
8-5-67
1-10-69

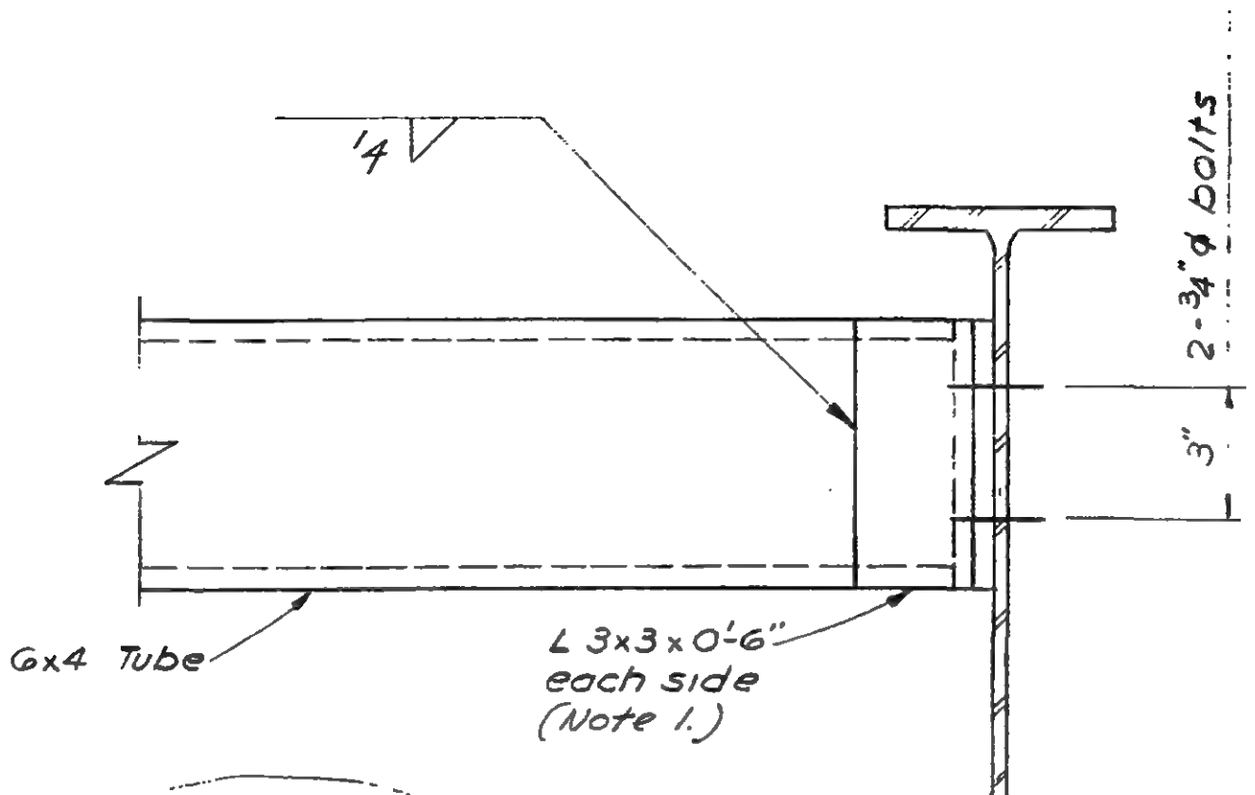

DETAIL 451

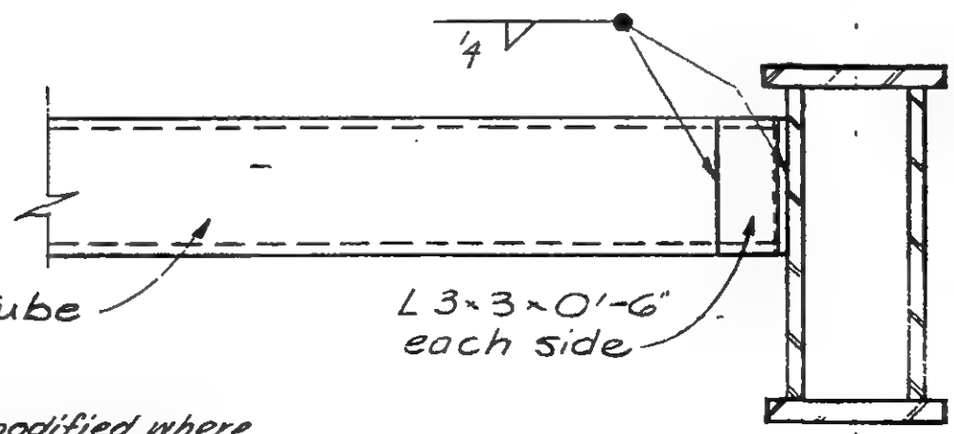

DETAIL 451

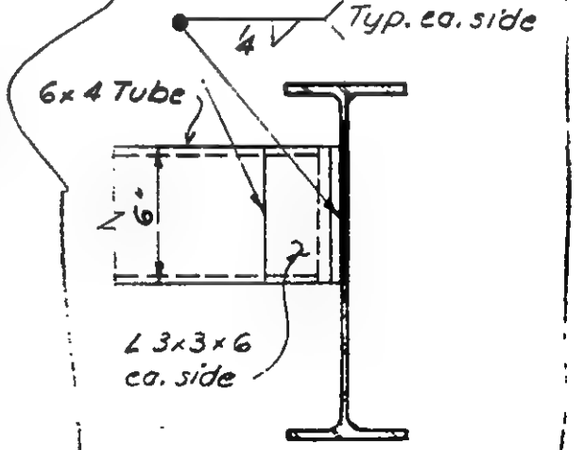

DETAIL 451A

Note 1. These angles modified where details 174 & 175 are scheduled for far side of beam. (See 6-AB2-76 & 77)

LICENSED PROFESSIONAL ENGINEER LESLIE E. ROBERTSON No. 34360 STATE OF NEW YORK

6-AB2-102

WORTHINGTON, SKILLING, HELLE & JACKSON Civil & Structural Engineers

PROJECT	TITLE	DATE
THE WORLD TRADE CENTER	CONNECTION DETAIL 452 A, B, C	5-9-67

REVISIONS

- 9-2-67
- 10-31-67
- 3-11-68
- 5-7-68

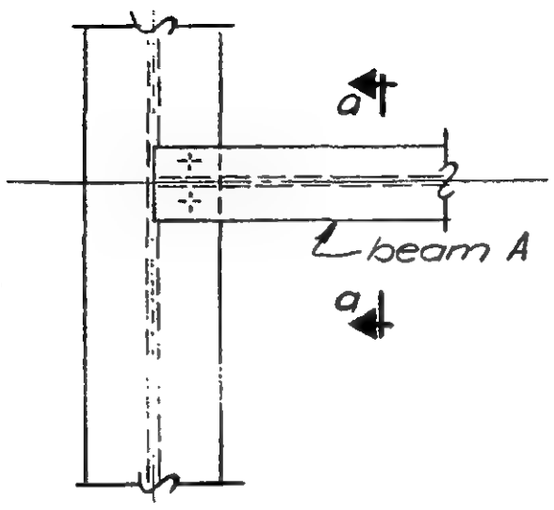

PLAN

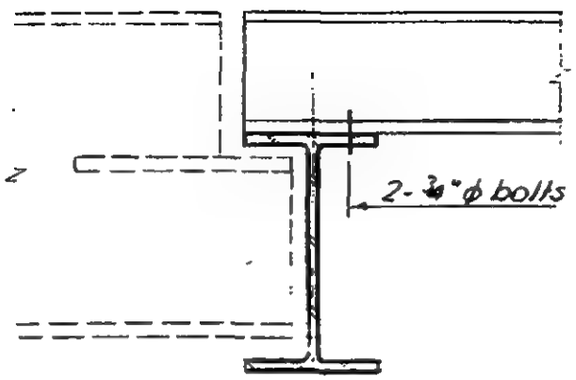

452 B only

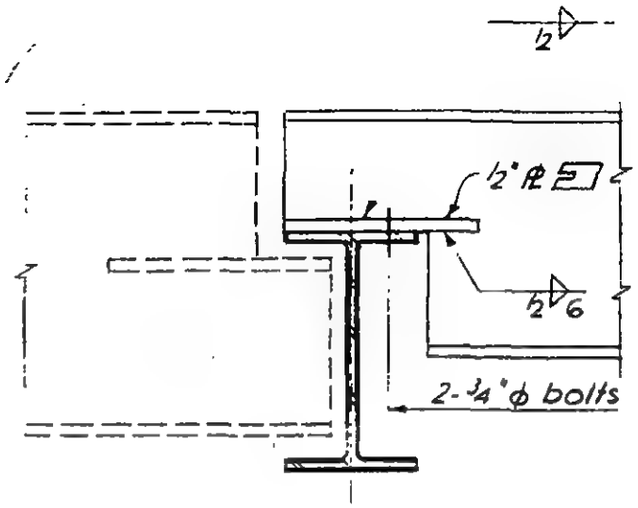

452 C

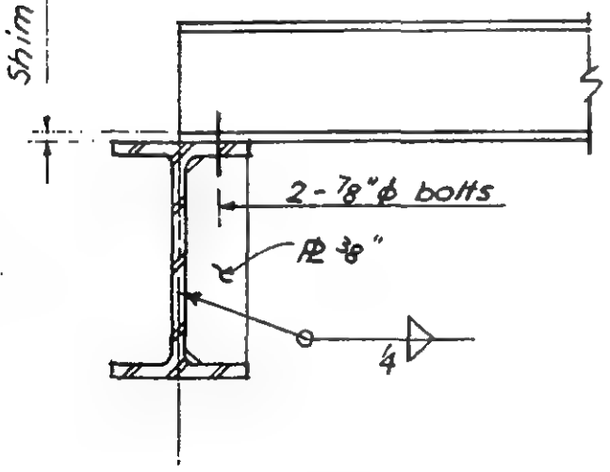

Section a-a beam A-16 WF

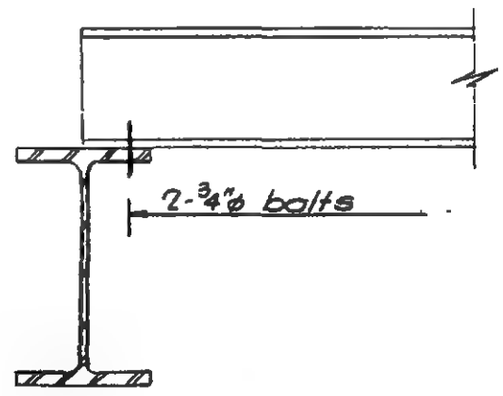

Section a-a beam A-8B

PROFESSIONAL ENGINEER
L. ROBERTSON
No. 34360
STATE OF THE STATE OF NEW YORK

G-AB2-103

WORTHINGTON, SKILLING, HELLE & JACKSON — Civil & Structural Engineers

PROJECT: THE WORLD TRADE CENTER | TITLE: CONNECTION DETAIL 453A C | DATE: 6-5-67

REVISIONS

- 5-67
10-2-67

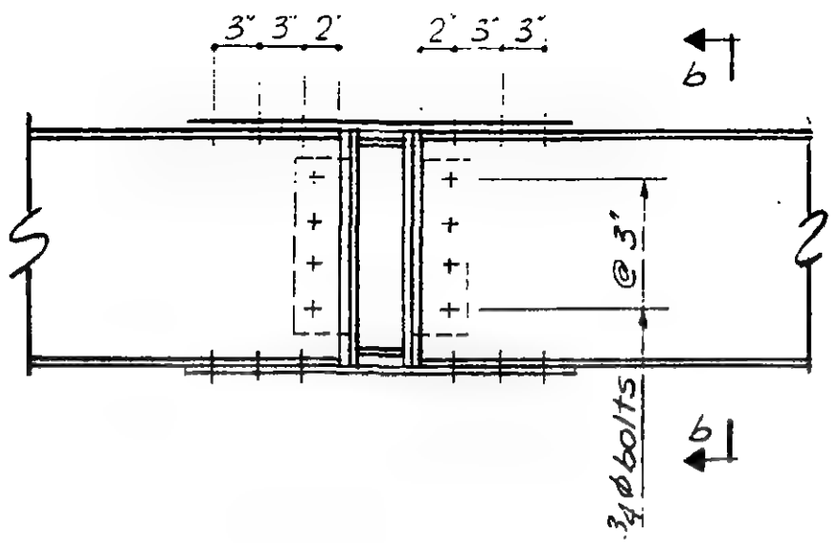

Section a-a

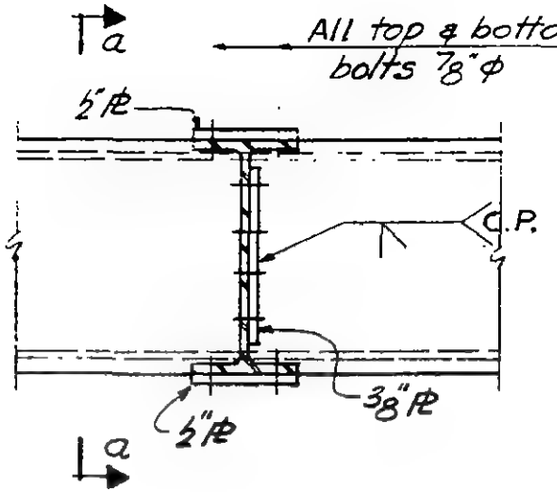

Section b-b

453 A

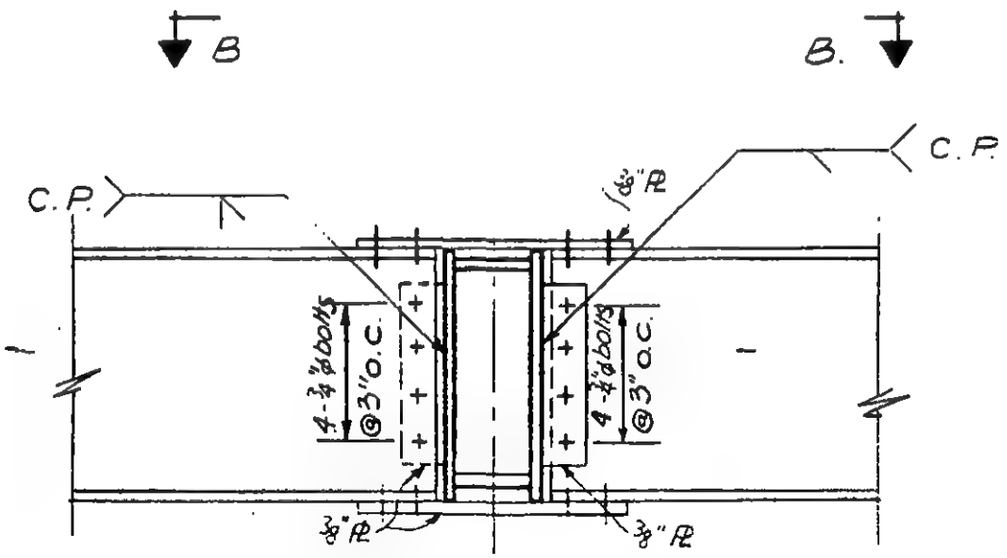

Section A - A

453 C

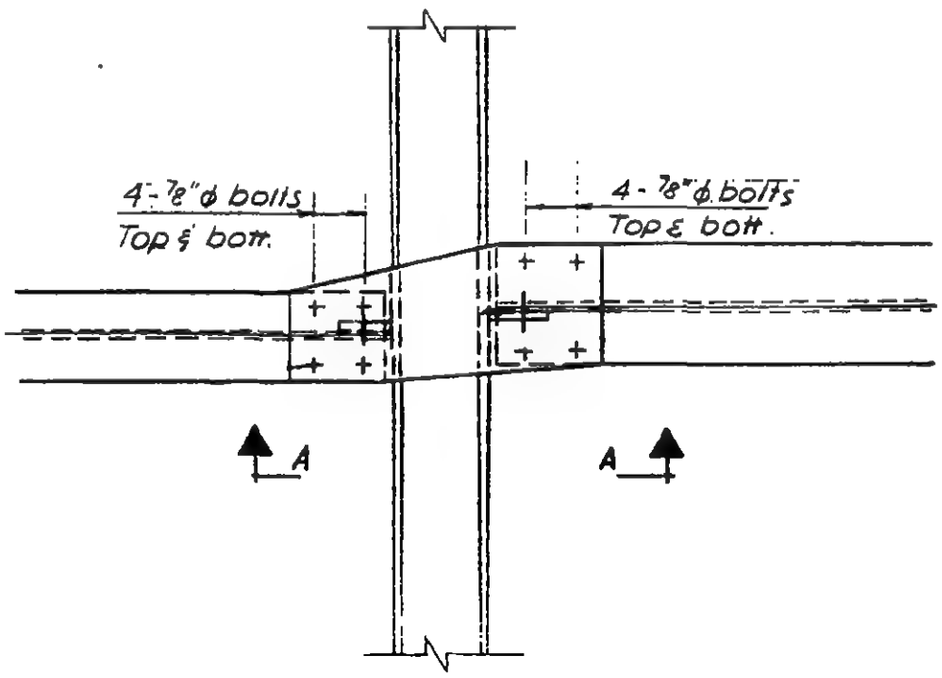

Section B-B

LICENSED PROFESSIONAL ENGINEER
LESLIE E. ROBERTSON
No. 34360
UNIVERSITY OF THE STATE OF NEW YORK

6-AB2-104

WORTHINGTON, SKILLING, HELLE & JACKSON — Civil & Structural Engineers

PROJECT: THE WORLD TRADE CENTER | TITLE: CONNECTION DETAIL 454 A, B, C | DATE: 6-5-67

REVISIONS
10-2-67
12-21-67
1-24-68

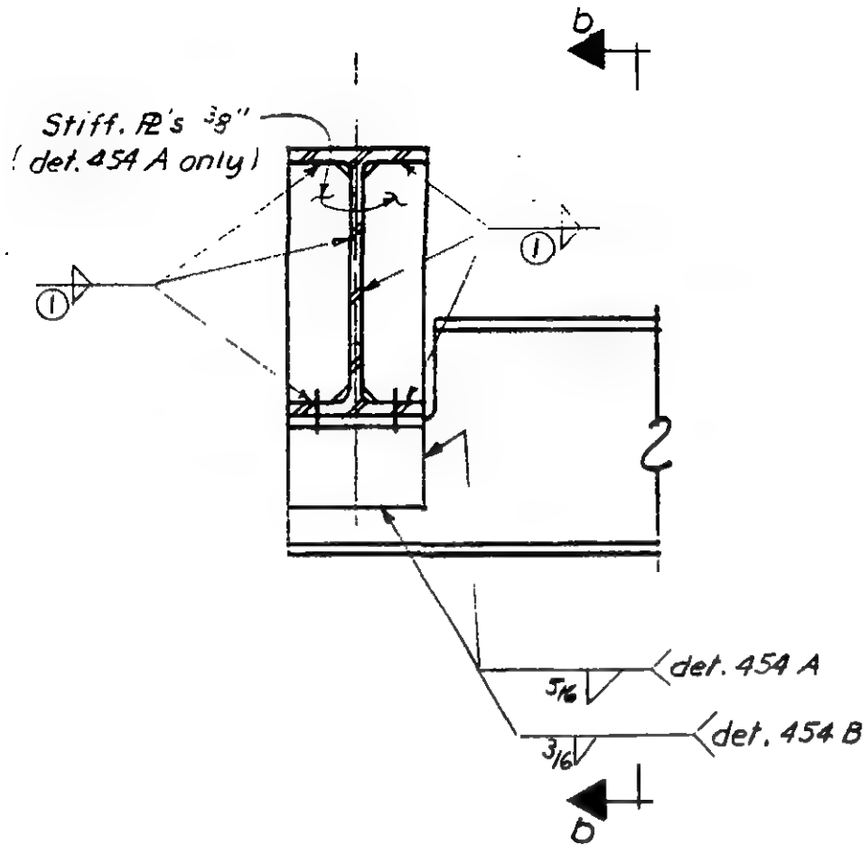

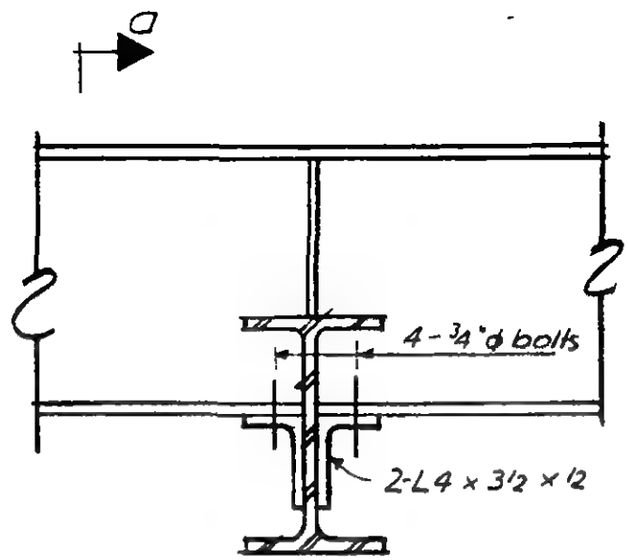

Section a-a — 454 A & B — Section b-b

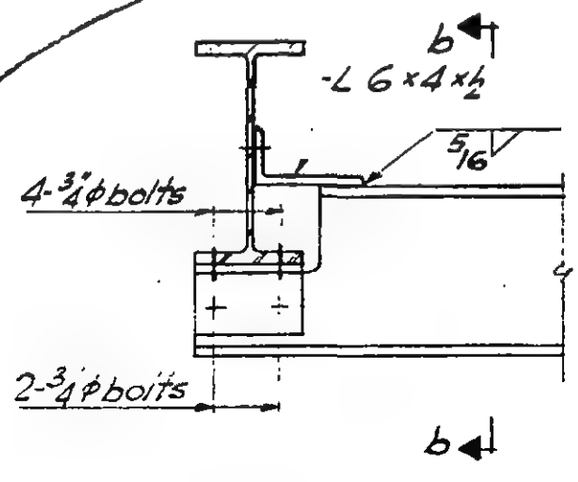

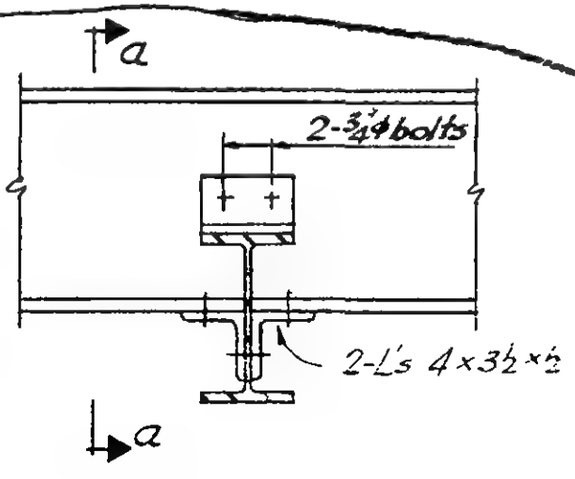

Section a-a — 454 C — Section b-b

6-AB2-105

LICENSED PROFESSIONAL ENGINEER — LESLIE E. ROBERTSON — No. 34360 — UNIVERSITY OF THE STATE OF NEW YORK

WORTHINGTON, SKILLING, HELLE & JACKSON — Civil & Structural Engineers

PROJECT: THE WORLD TRADE CENTER | TITLE: CONNECTION DETAIL 455 A, B | DATE: 6-5-67

REVISIONS
10-2-67
11-23-67
1-24-68

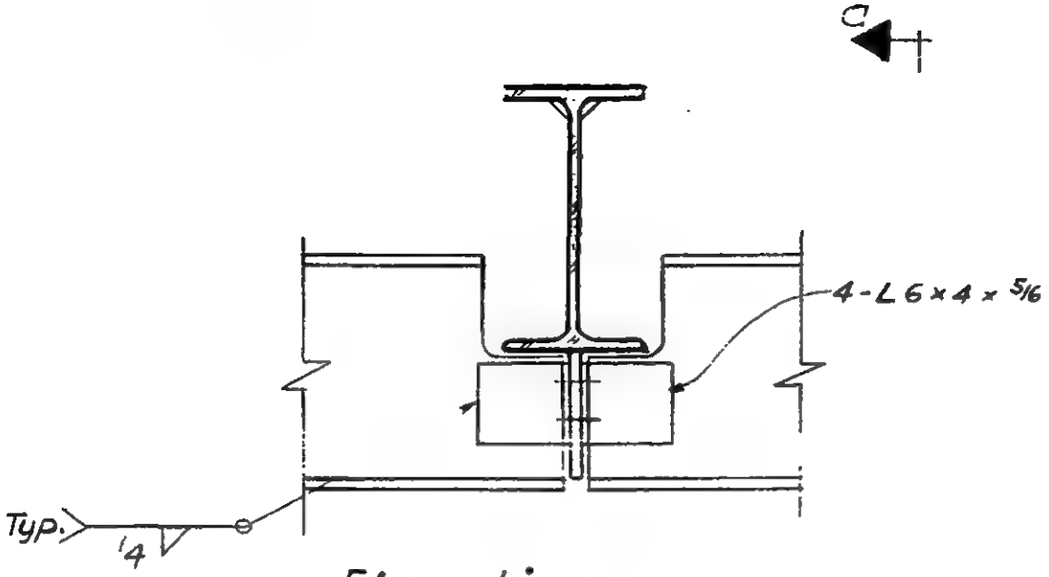

Elevation
Detail 455 A

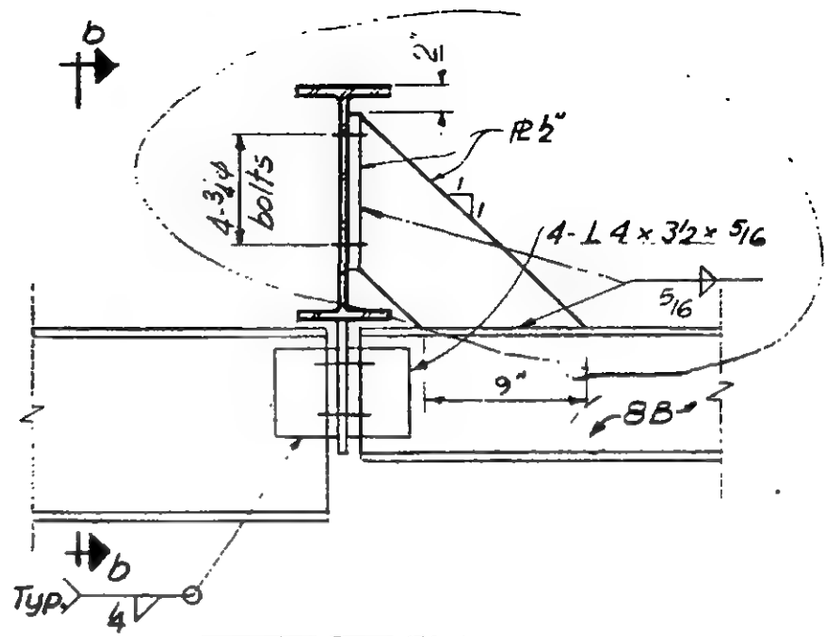

Elevation
Detail 455 B

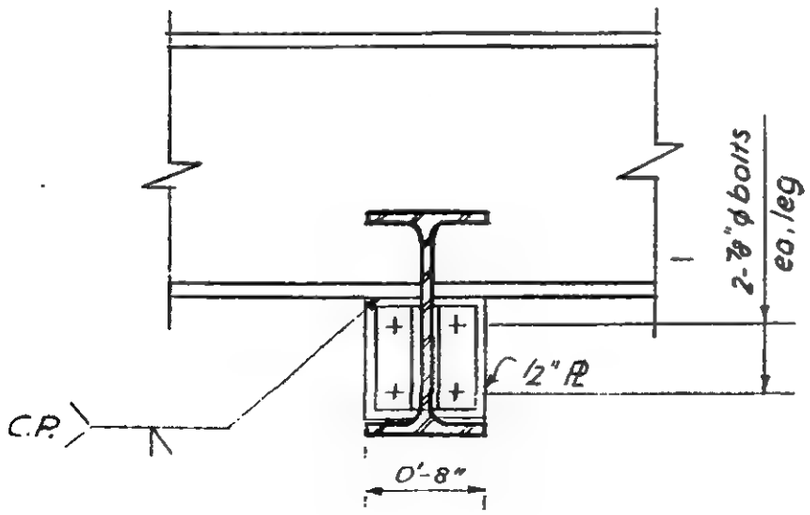

Section a-a

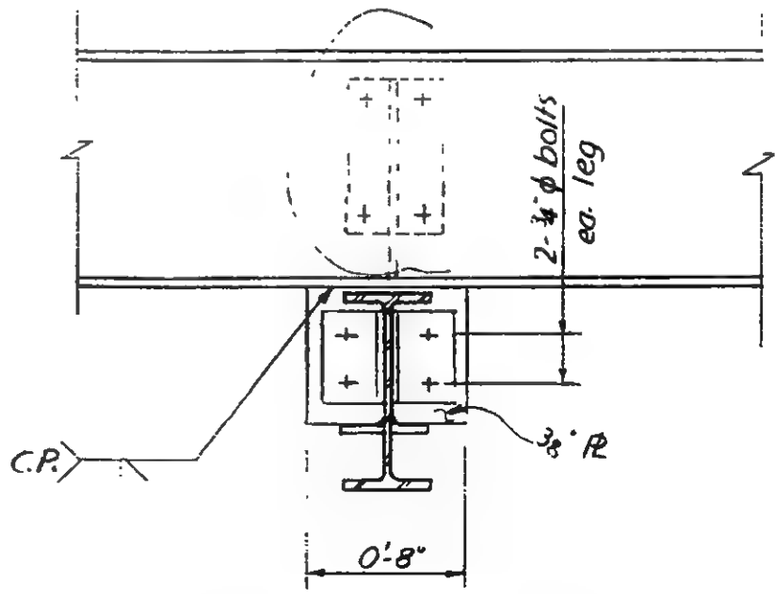

Section b-b

6-AB2-106

LICENSED PROFESSIONAL ENGINEER
LESLIE E. ROBERTSON
No. 34360
UNIVERSITY OF THE STATE OF NEW YORK

SKILLING - HELLE - CHRISTIANSEN - ROBERTSON Structural & Civil Engineers

PROJECT THE WORLD TRADE CENTER | TITLE CONNECTION DETAIL 456 A,B | DATE 5-9-67

REVISIONS
8-5-67
10-2-67
2-21-68

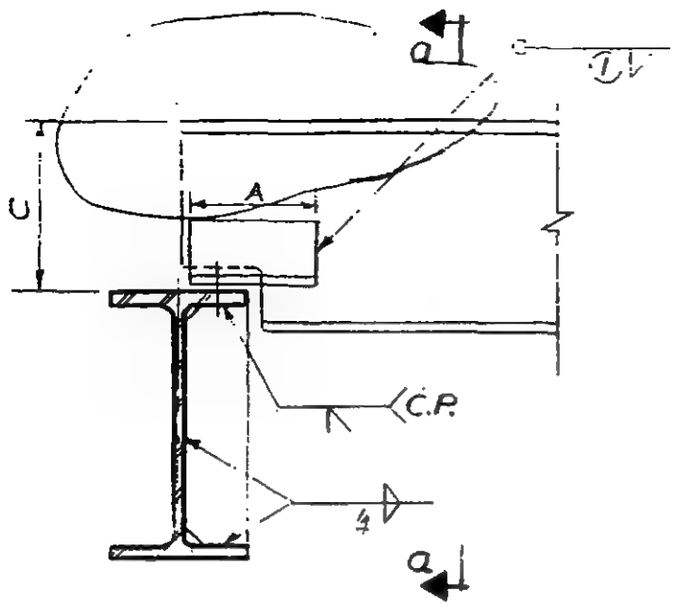

Elevation

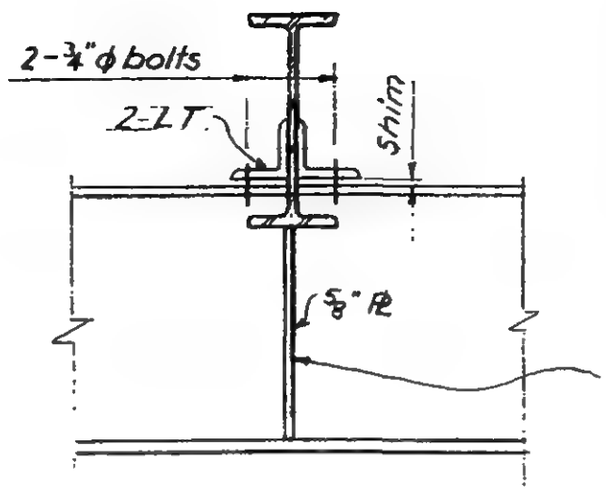

Section a-a

SCHEDULE			
DETAIL	L T	DIM. A	WELD ①
456A	4×4×½×0'-6"	0'-6"	⅜
456B	9×4×9/16×0'-10"	0'-9"	5/16

Disregard stiffener if supported.
Beam is a light beam (B).

Detail 456 A & B (C ≥ 8")

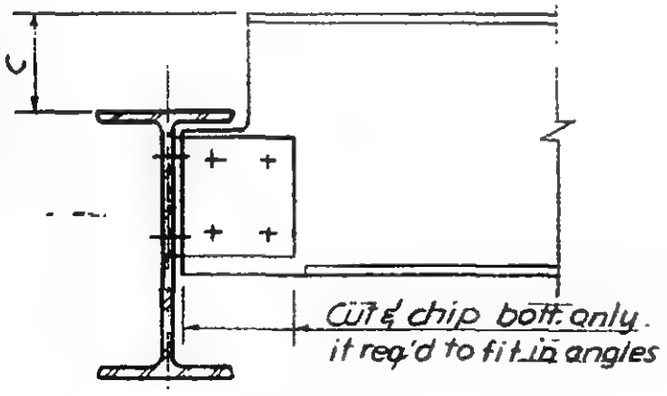

Elevation

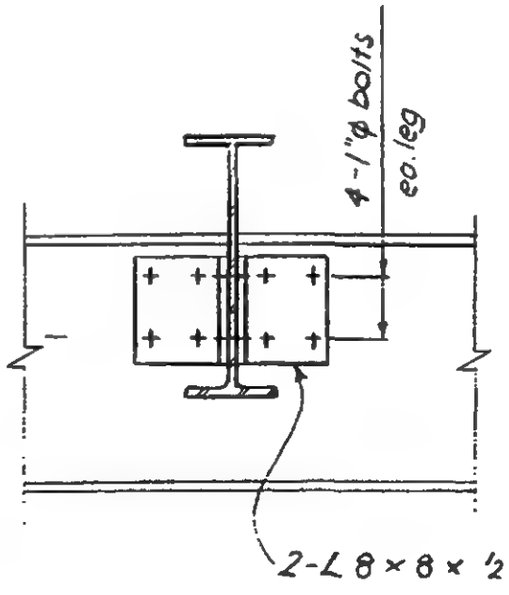

Section a-a

Detail 456 B (C < 8")

LICENSED PROFESSIONAL ENGINEER
LESLIE E. ROBERTSON
NO. 34360
THE STATE OF NEW YORK

6-AB2-107

SKILLING - HELLE - CHRISTIANSEN - ROBERTSON Structural & Civil Engineers

PROJECT THE WORLD TRADE CENTER | TITLE CONNECTION DETAIL 456 C.D.E | DATE 11-17-67

REVISIONS

12-4-67

10-9-68

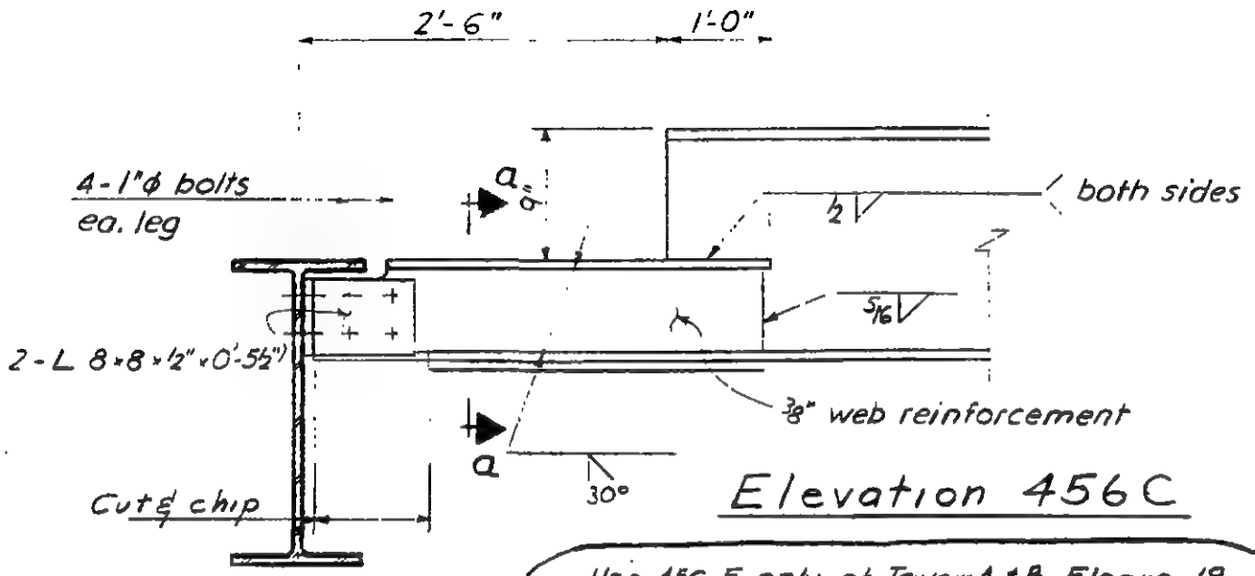

Elevation 456C

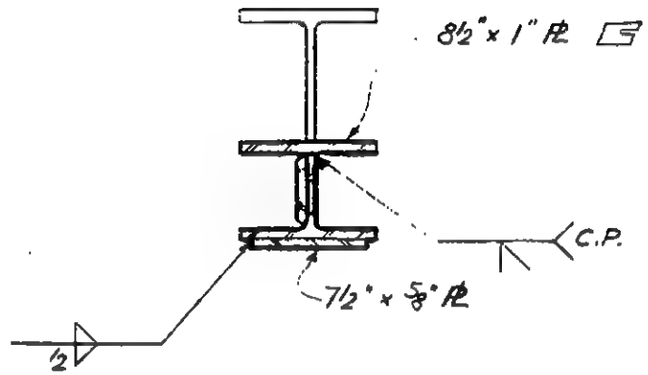

Section a-a

Use 456 E only at Towers A & B, Floors 18, 26, 34, and Tower A floor 56. Plates marked (*) are Revisions after Fabrication, fild installed. All others materials shop fabricated.

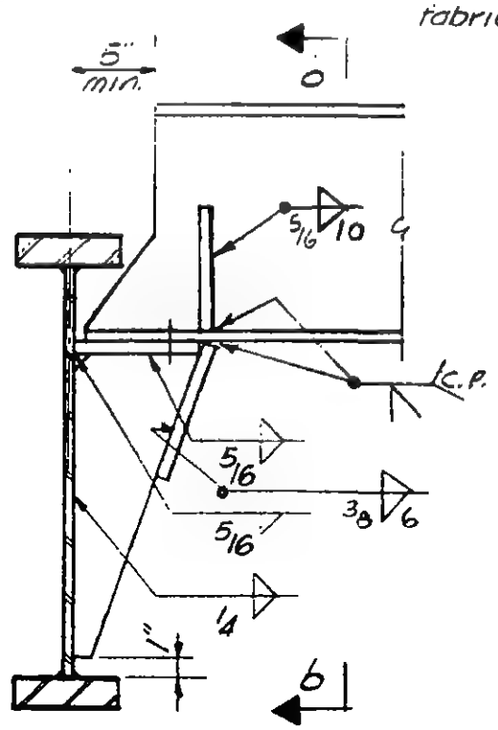

Elevation (456E)

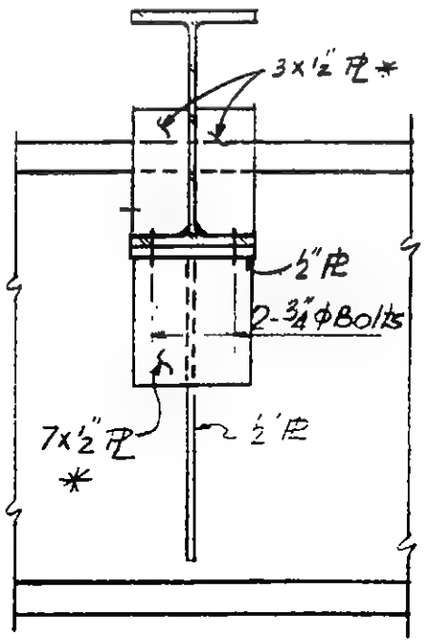

Section b-b

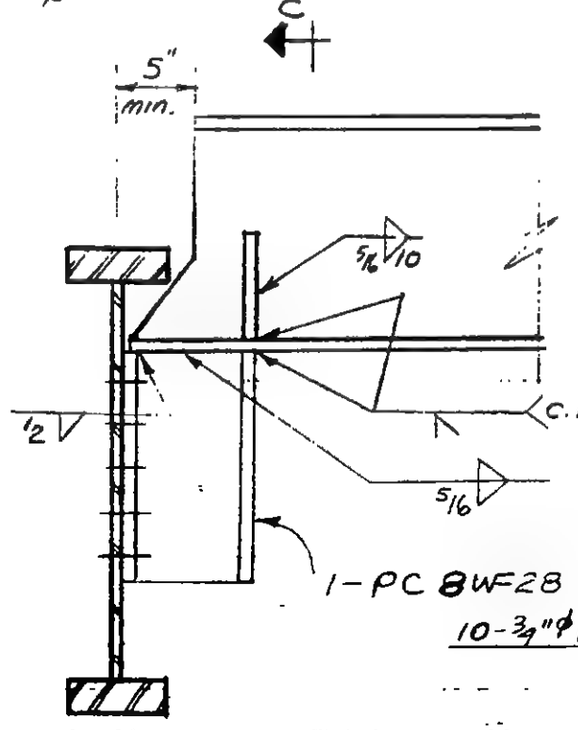

Elevation 456D

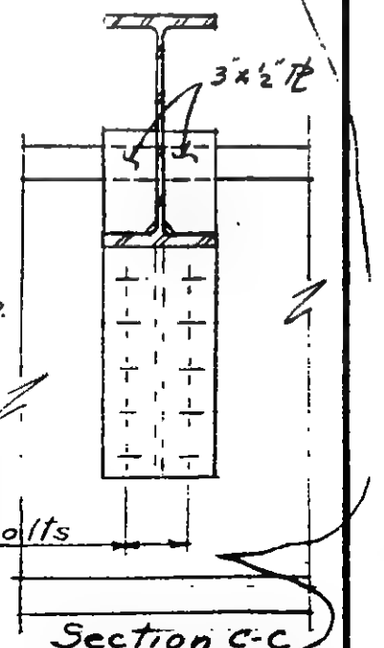

Section c-c

6-AB2-1071

LICENSED PROFESSIONAL ENGINEER
LESLIE E. ROBERTSON
No. [illegible]
UNIVERSITY OF THE STATE OF NEW YORK

SKILLING, HELLE, CHRISTIANSEN, ROBERTSON — Structural & Civil Engineers

PROJECT: THE WORLD TRADE CENTER | TITLE: CONNECTION DETAIL 456 F G | DATE: 9-25-68

REVISIONS

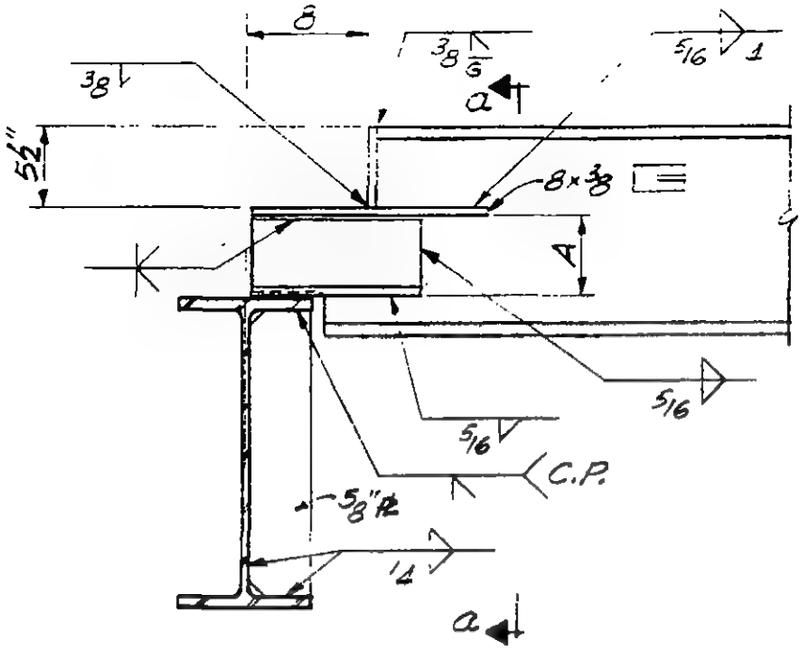

ELEVATION 456 F

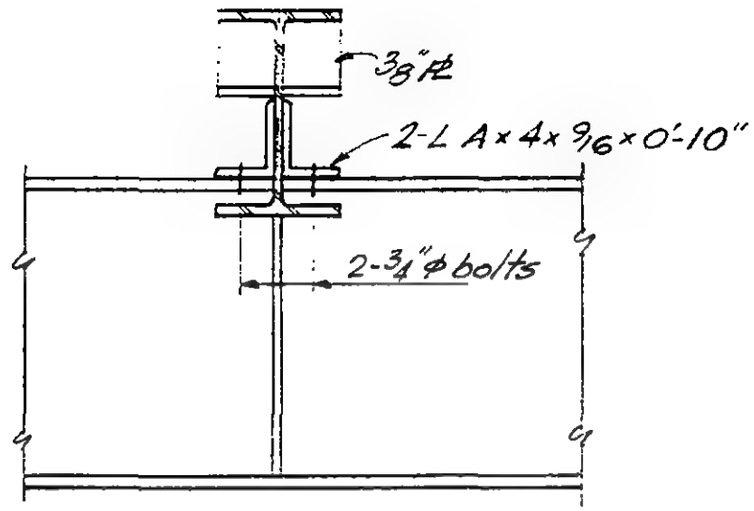

Section a-a

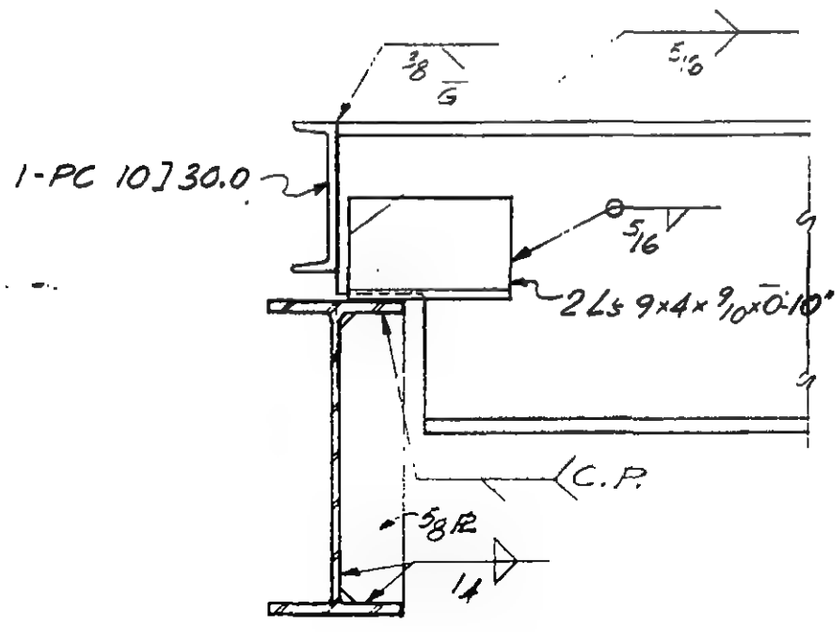

ELEVATION 456 G

LICENSED PROFESSIONAL ENGINEER — LESLIE E. ROBERTSON — No. 34360 — UNIVERSITY OF THE STATE OF NEW YORK

DESIGNED

DRAWN

REVIEWED

6-AB2-107.2

SKILLING, HELLE, CHRISTIANSEN, ROBERTSON — Structural & Civil Engineers

PROJECT: THE WORLD TRADE CENTER | TITLE: CONNECTION DETAIL 456 H I J | DATE: 9-25-68

REVISIONS

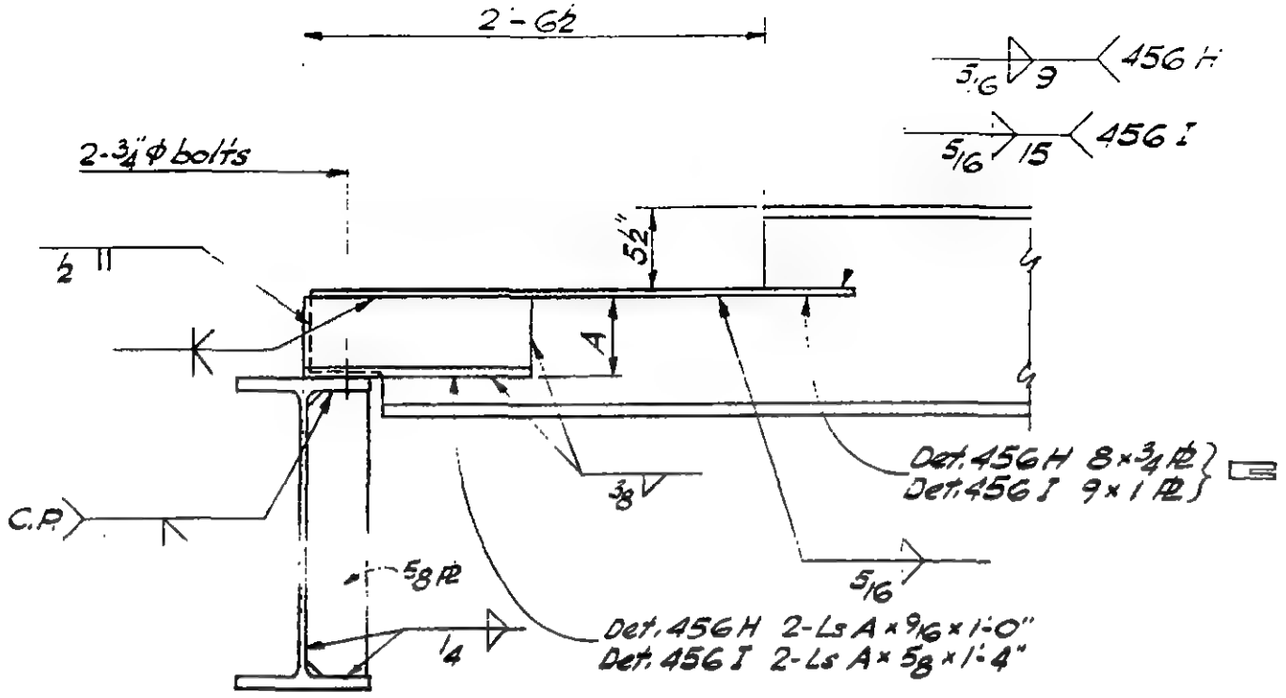

456 H

456 I

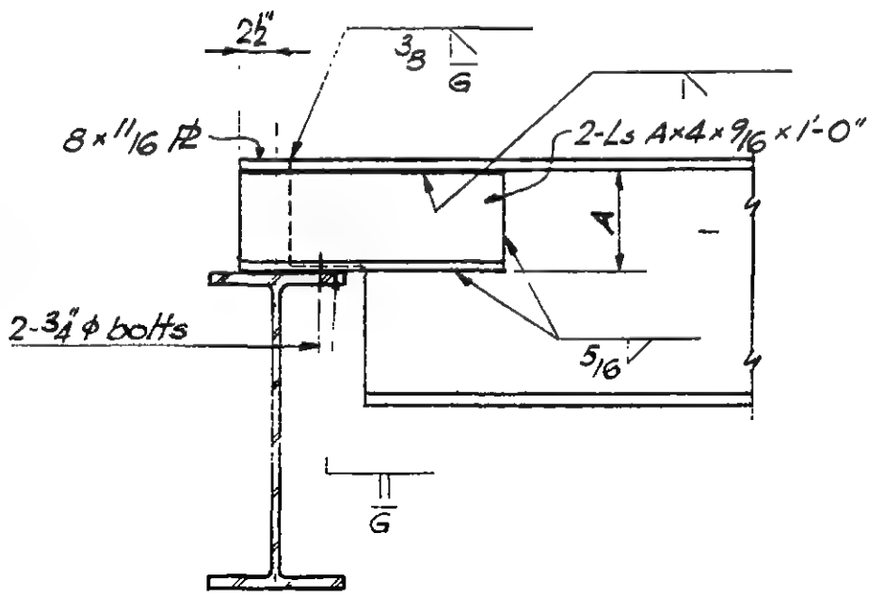

456 J

LICENSED PROFESSIONAL ENGINEER
LESLIE E. ROBERTSON
No. 34360
UNIVERSITY OF THE STATE OF NEW YORK

DESIGNED

DRAWN

REVIEWED

6-AB2-107.3

SKILLING, HELLE, CHRISTIANSEN, ROBERTSON — Structural & Civil Engineers

PROJECT: THE WORLD TRADE CENTER | TITLE: DETAIL 45G L, M, N | DATE: 9-25-68

REVISIONS

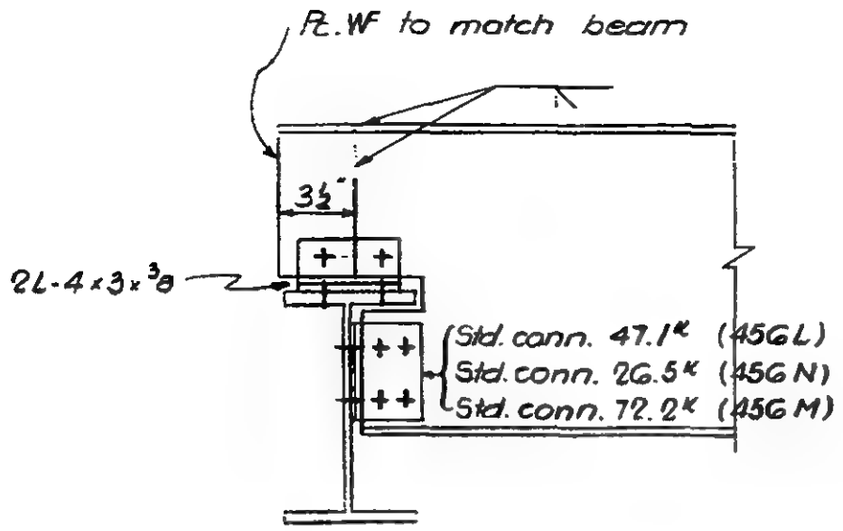

Detail 45G L, M, N

LICENSED PROFESSIONAL ENGINEER
LESLIE E. ROBERTSON
No. 34960
UNIVERSITY OF THE STATE OF NEW YORK

DESIGNED

DRAWN
G.T.H.

REVIEWED

G-AB2-107.4

WORTHINGTON, SKILLING, HELLE & JACKSON — Civil & Structural Engineers

PROJECT: THE WORLD TRADE CENTER | TITLE: CONNECTION DETAIL 457 A | DATE: 6-5-67

REVISIONS
8-14-67

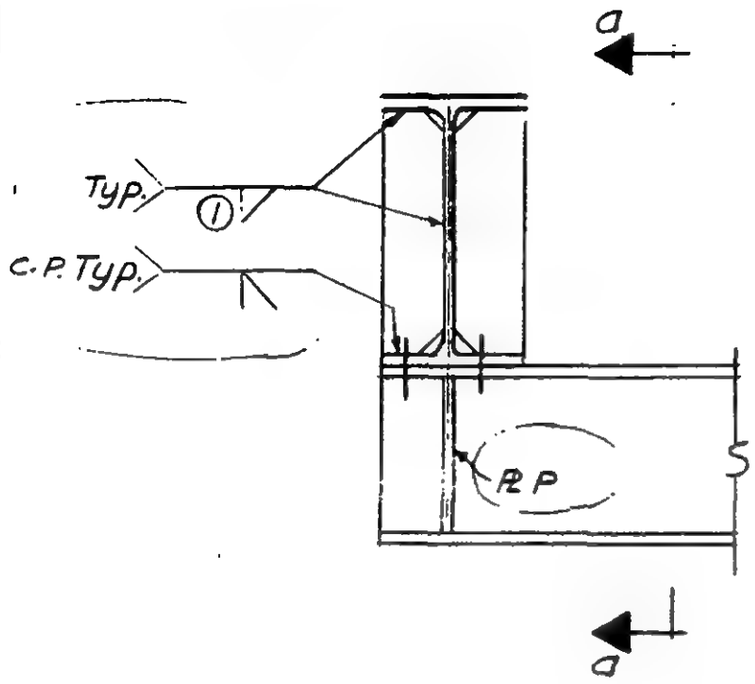

SCHEDULE	
PLATES	
P	3/8"
Q	3/8"
WELDS	
①	3/16
②	3/16

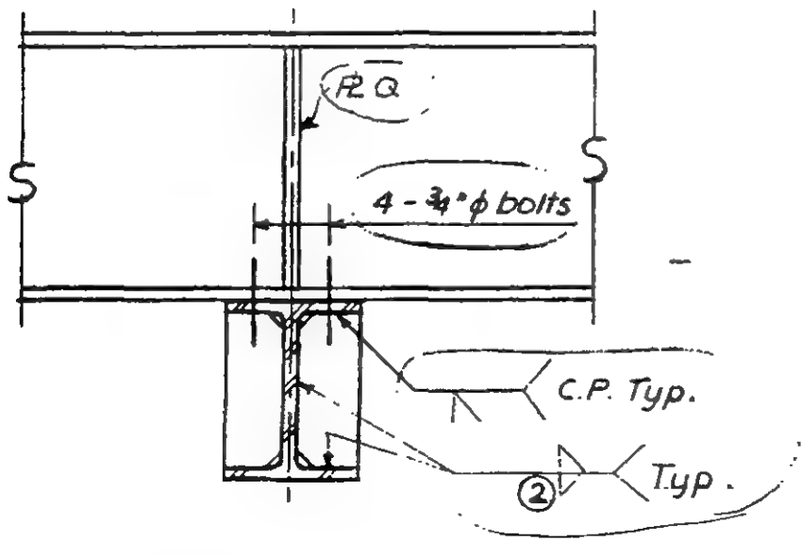

Section a-a

LICENSED PROFESSIONAL ENGINEER
LESLIE E. ROBERTSON
No. 34360
UNIVERSITY OF THE STATE OF NEW YORK

G-AB2-108

SKILLING - HELLE - CHRISTIANSEN - ROBERTSON Structural & Civil Engineers

PROJECT THE WORLD TRADE CENTER | TITLE CONNECTION DETAIL 458A,B | DATE 12-21-67

REVISIONS

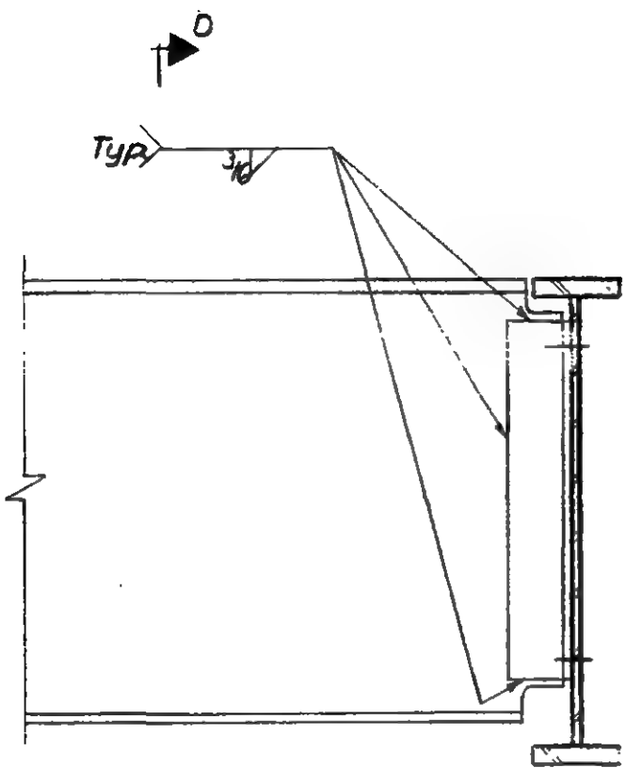

Section a-a

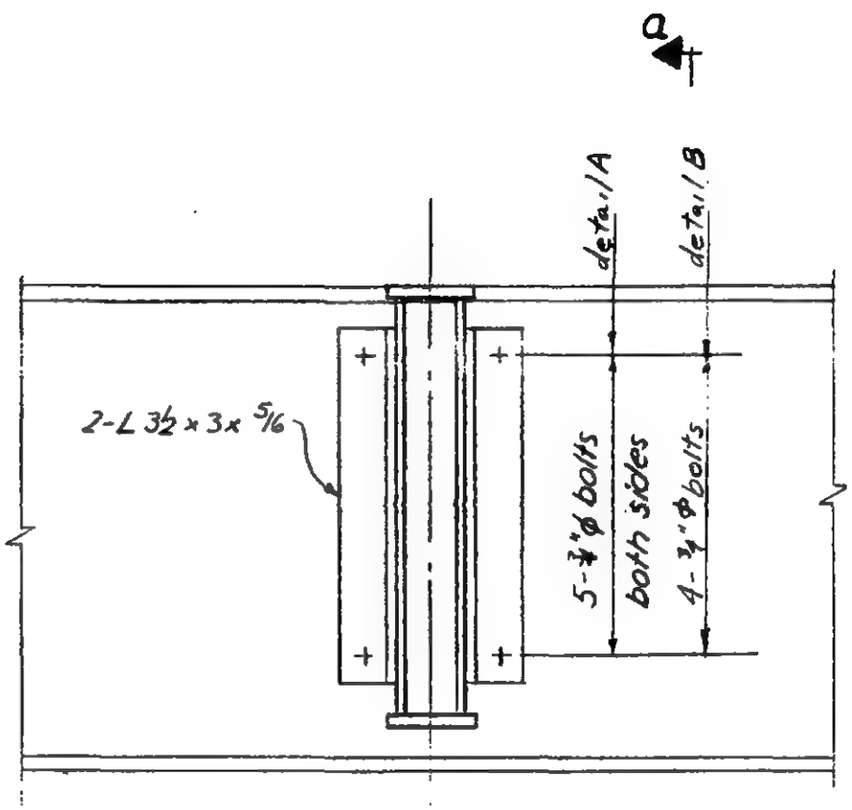

Section b-b

LICENSED PROFESSIONAL ENGINEER
LESLIE E. ROBERTSON
No. 34360
UNIVERSITY OF THE STATE OF NEW YORK

6-AB2-109

WORTHINGTON, SKILLING, HELLE & JACKSON — Civil & Structural Engineers

PROJECT THE WORLD TRADE CENTER | TITLE CONNECTION DETAIL 459 | DATE 6-5-67

REVISIONS

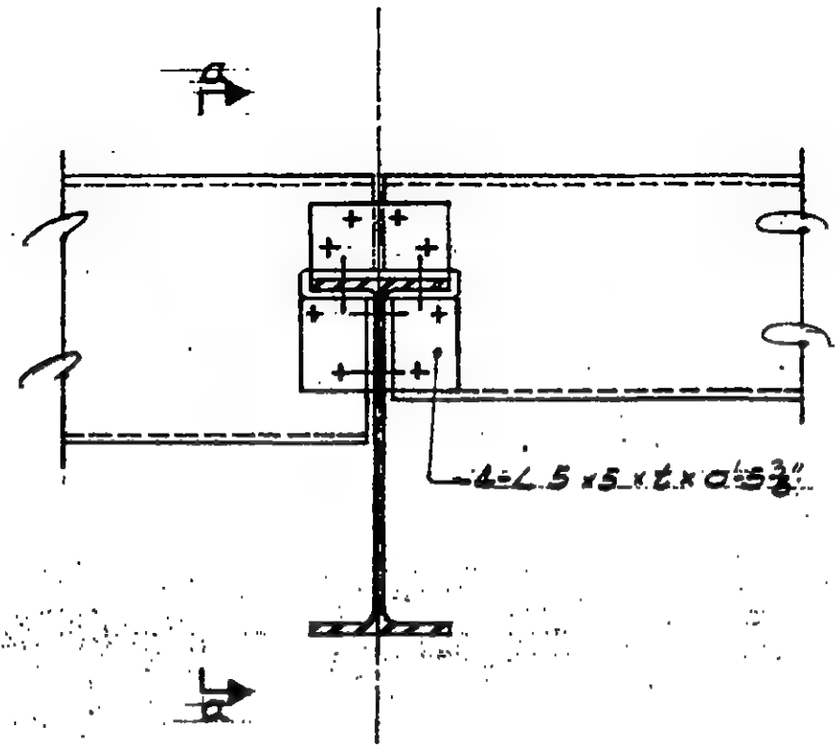

PLAN

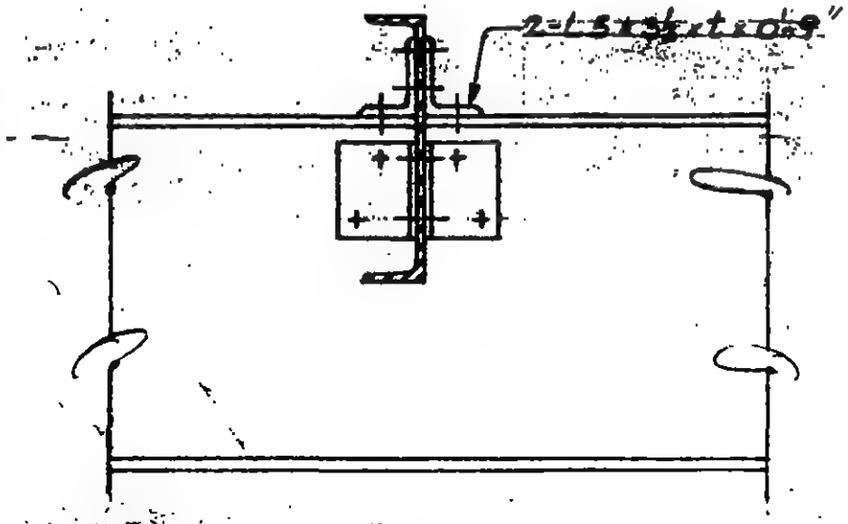

Section a-a

LICENSED PROFESSIONAL ENGINEER
LESLIE E. ROBERTSON
No. 34360
UNIVERSITY OF THE STATE OF NEW YORK

6-AB2-11

WORTHINGTON, SKILLING, HELLE & JACKSON — Civil & Structural Engineers

PROJECT THE WORLD TRADE CENTER | TITLE CONNECTION DETAIL 460 A | DATE 6-5-67

REVISIONS

9-15-67

11-10-67

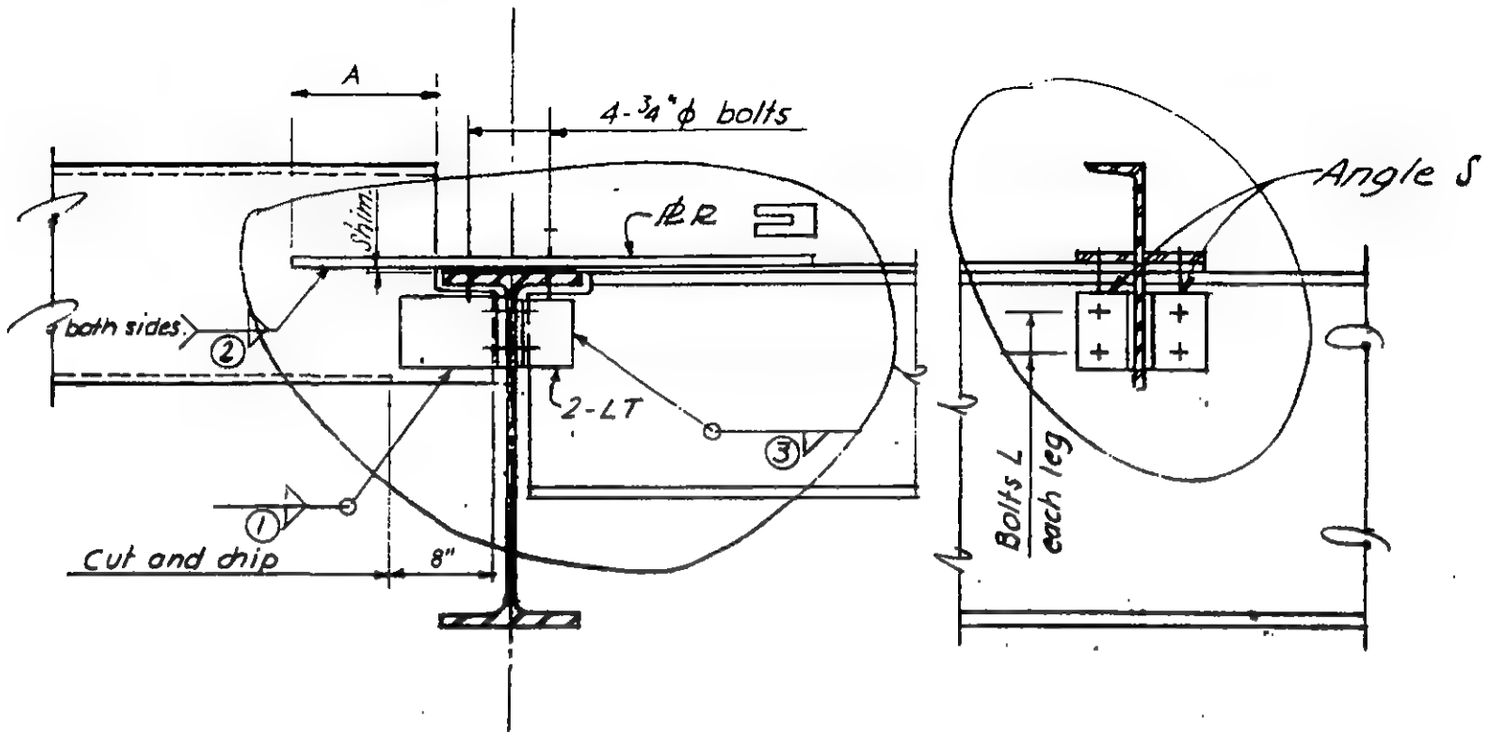

Section a-a

Section b-b

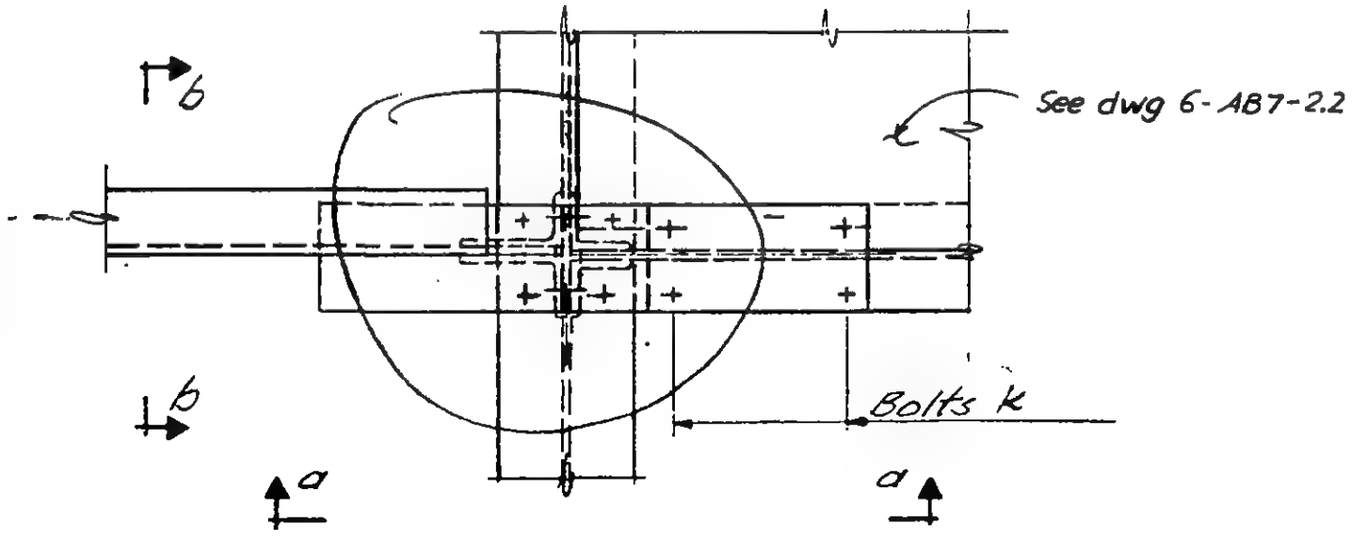

Plan

LICENSED PROFESSIONAL ENGINEER
LESLIE E. ROBERTSON
NO. 34360
UNIVERSITY OF THE STATE OF NEW YORK

6-AB2-IM

SKILLING - HELLE - CHRISTIANSEN - ROBERTSON Structural & Civil Engineers

PROJECT THE WORLD TRADE CENTER | TITLE CONNECTION DETAIL 460 B | DATE 9-15-67

REVISIONS

11-10-67

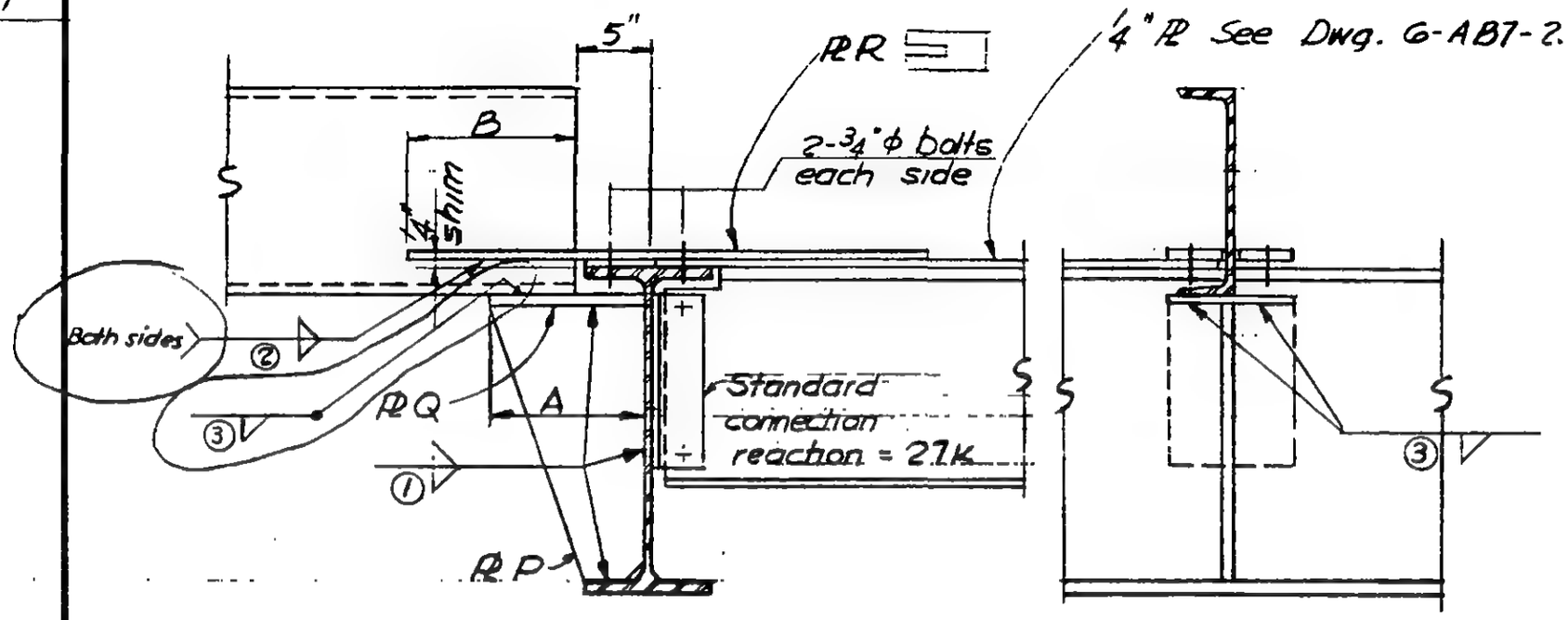

Section a-a

Section b-b

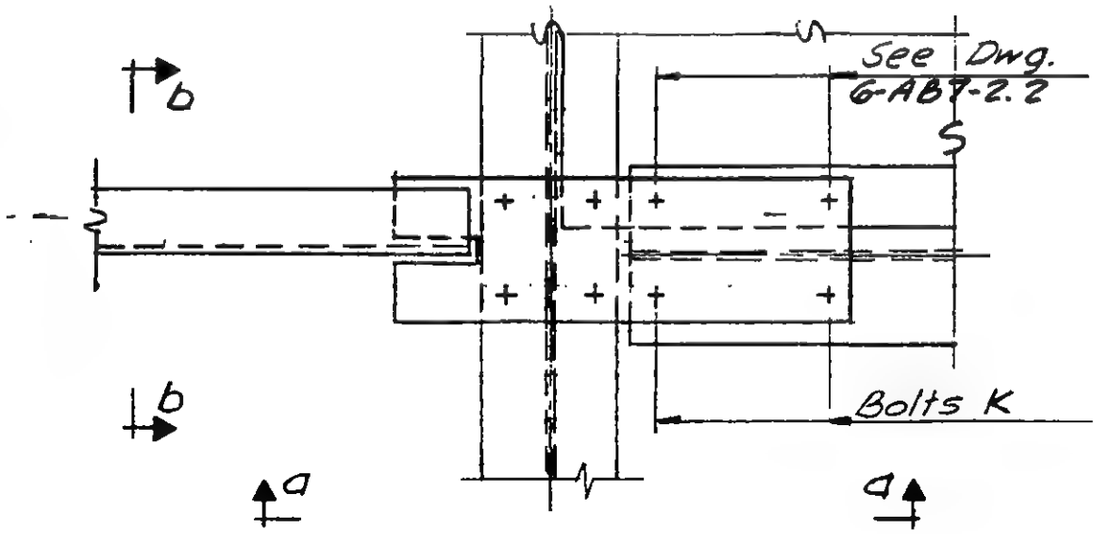

Plan

LICENSED PROFESSIONAL ENGINEER
LESLIE E. ROBERTSON
No. 34360
UNIVERSITY OF THE STATE OF NEW YORK

G-AB2-1.1R1

SKILLING - HELLE - CHRISTIANSEN - ROBERTSON Structural & Civil Engineers

PROJECT THE WORLD TRADE CENTER | TITLE SCHEDULE FOR DETAIL 460 A, B | DATE 9-15-67

REVISIONS

-10-67

	460 A	460 B
PLATES		
P	—	5/8"
Q	—	5/8"
R	6" × 3/4"	1/2"
ANGLES		
S	7 × 4 × 3/8 × 0'-5 1/2"	—
T	4 × 3 1/2 × 3/8 × 0'-5 1/2"	—
DIMENSIONS		
A	0'-6"	0'-11"
B	—	0'-6"
BOLTS		
K	8.-7/8" ϕ	5-1" ϕ
L	2-1" ϕ	—
WELDS		
①	7/16	5/16
②	5/16	5/16
③	1/4	3/8

LICENSED PROFESSIONAL ENGINEER ROBERTSON NO. 34360 STATE OF NEW YORK

G-AB2-111.2

SKILLING - HELLE - CHRISTIANSEN - ROBERTSON Structural & Civil Engineers

PROJECT THE WORLD TRADE CENTER | TITLE CONNECTION DETAIL 462A | DATE 1-24-68

REVISIONS

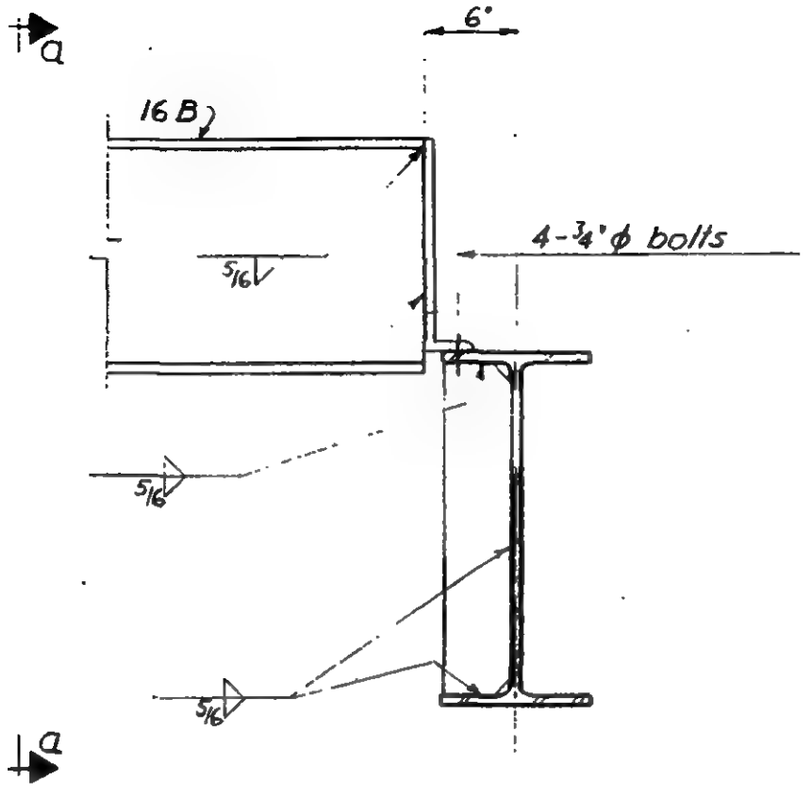

Elevation

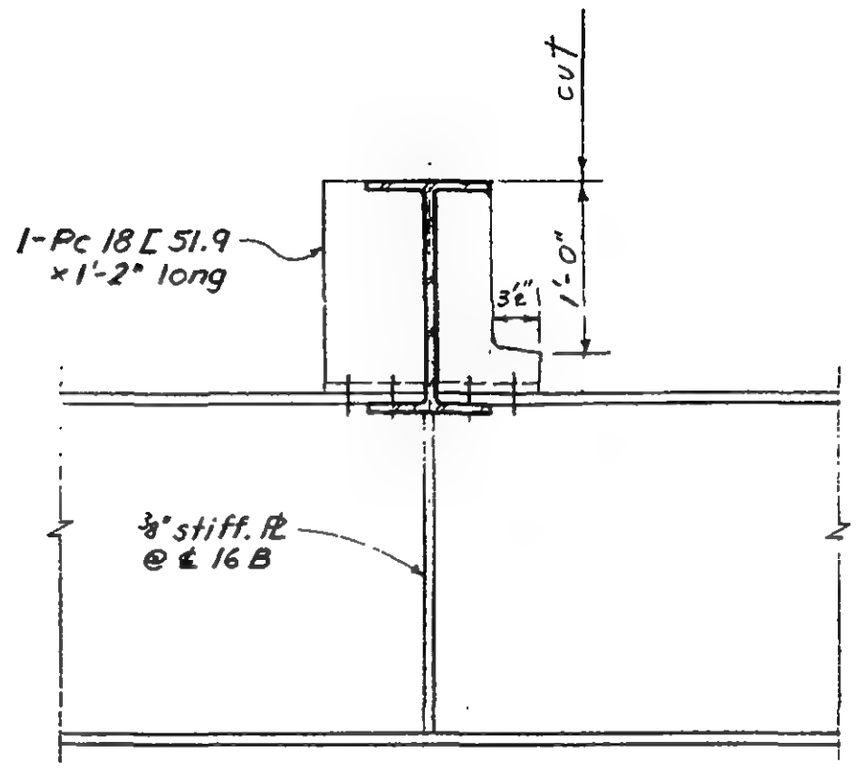

Section a-a

6-AB2-113

SKILLING - HELLE - CHRISTIANSEN - ROBERTSON Structural & Civil Engineers

PROJECT THE WORLD TRADE CENTER | TITLE CONNECTION DETAIL #63 A, B | DATE 3-14-67

REVISIONS

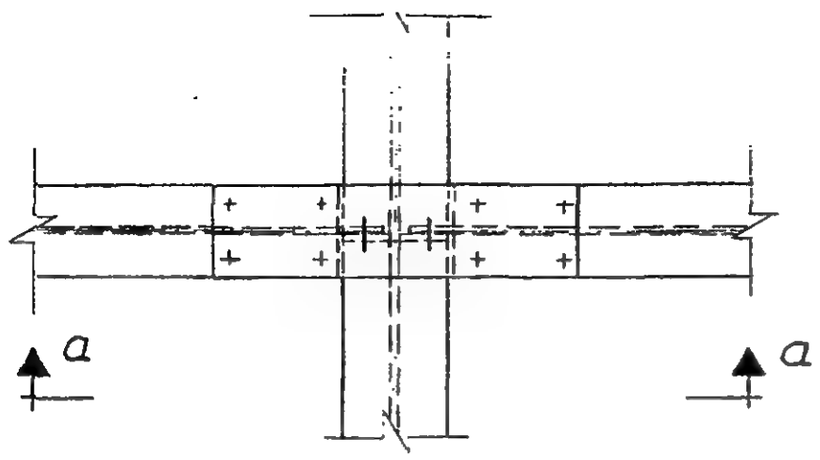

Plan

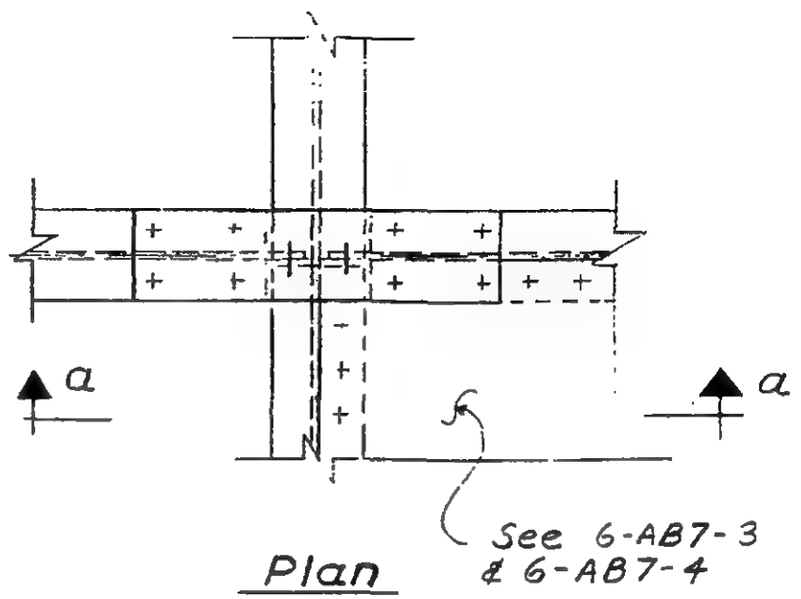

Plan

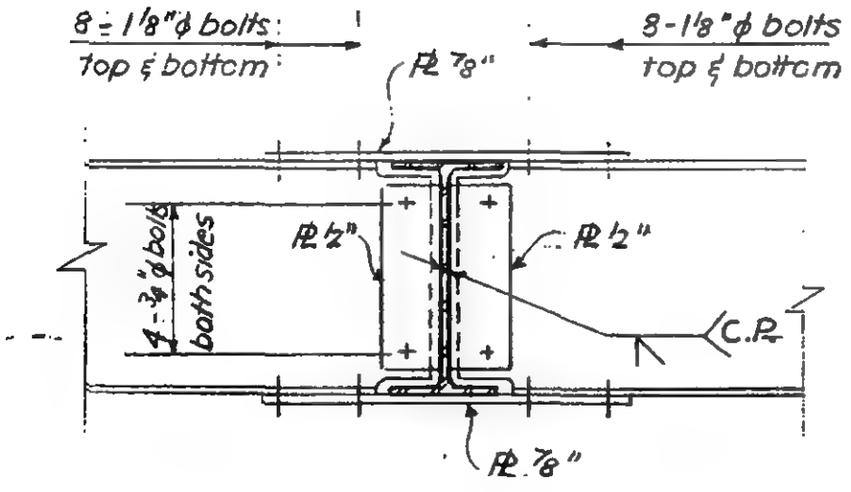

Section a-a

DETAIL 463 A

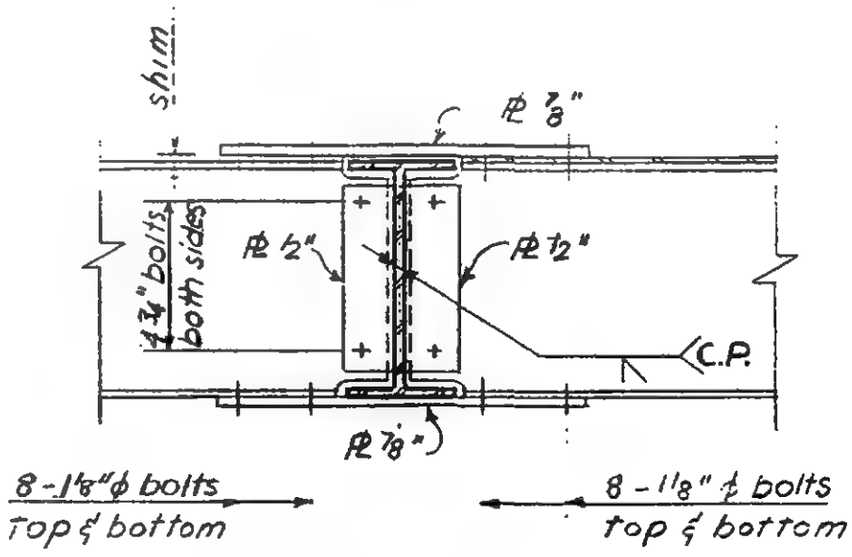

Section a-a

DETAIL 463 B

LICENSED PROFESSIONAL ENGINEER
LESLIE E. ROBERTSON
No. 34360
UNIVERSITY OF THE STATE OF NEW YORK

6-AB2-114

SKILLING - HELLE - CHRISTIANSEN - ROBERTSON — Structural & Civil Engineers

PROJECT THE WORLD TRADE CENTER | TITLE CONNECTION DETAIL 463 C, E & F | DATE 7-15-67

REVISIONS
11-10-67
1-24-68
2-9-68

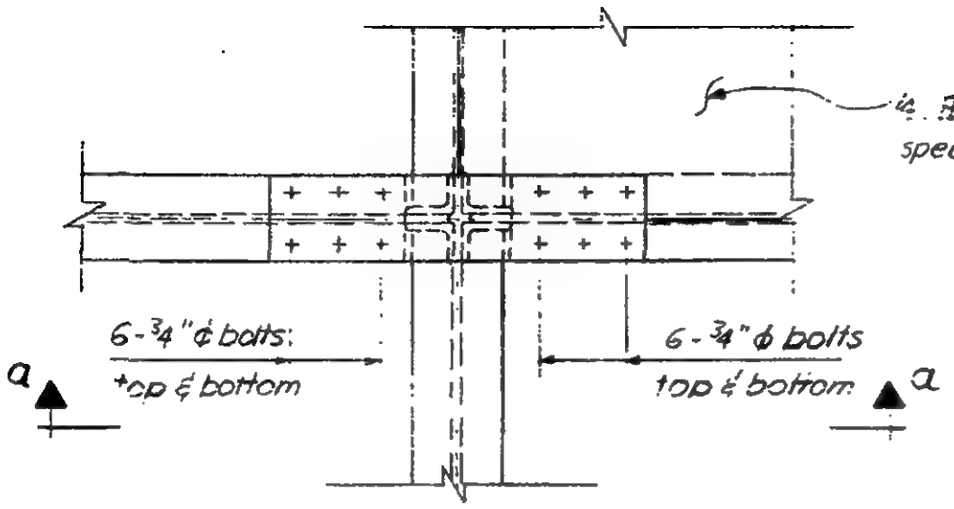

Plan
463 C & F

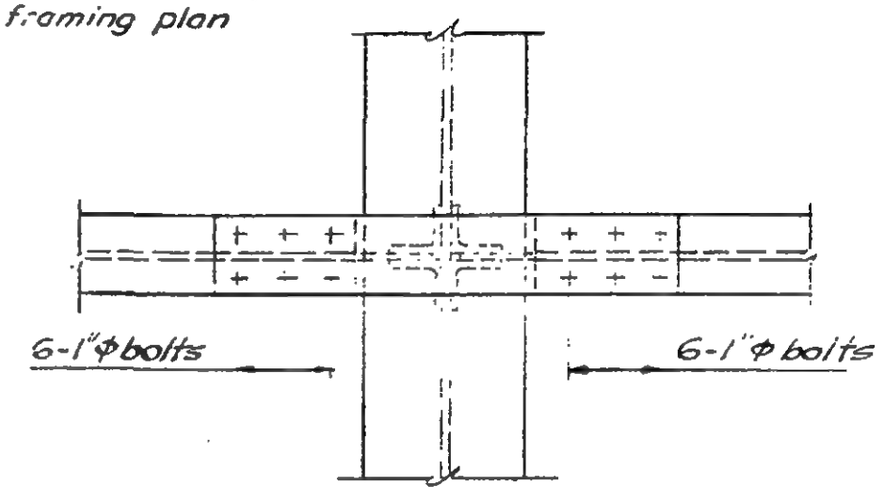

Plan
463 E

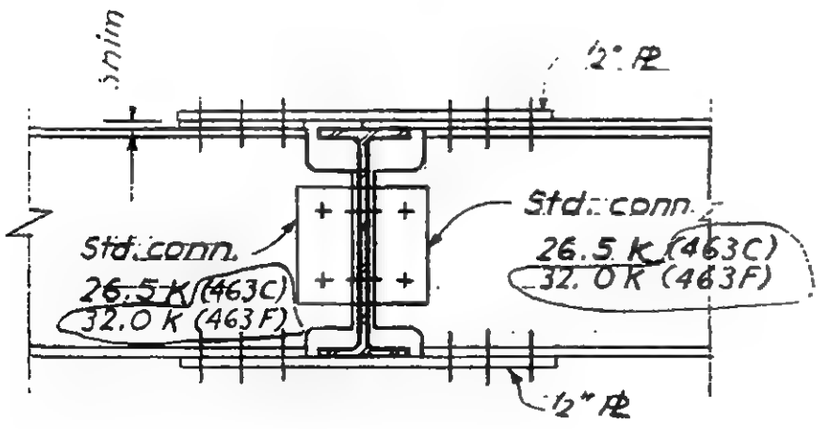

Section a-a

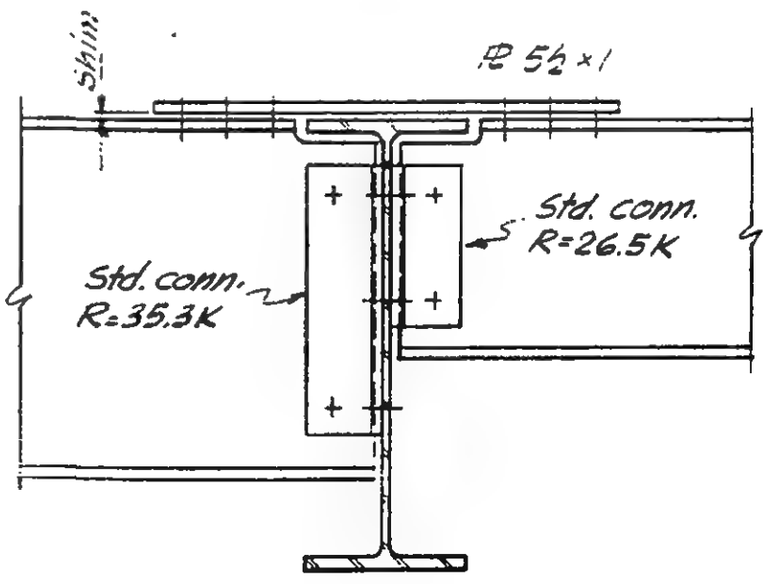

Section a-a

LICENSED PROFESSIONAL ENGINEER — LESLIE E. ROBERTSON — No. 34360 — UNIVERSITY OF THE STATE OF NEW YORK

6-AB2-114.1

SKILLING - HELLE - CHRISTIANSEN - ROBERTSON Structural & Civil Engineers

PROJECT THE WORLD TRADE CENTER | TITLE CONNECTION DETAIL 465A | DATE 6-5-67

REVISIONS
11-23-67
10-24-68
11-22-68

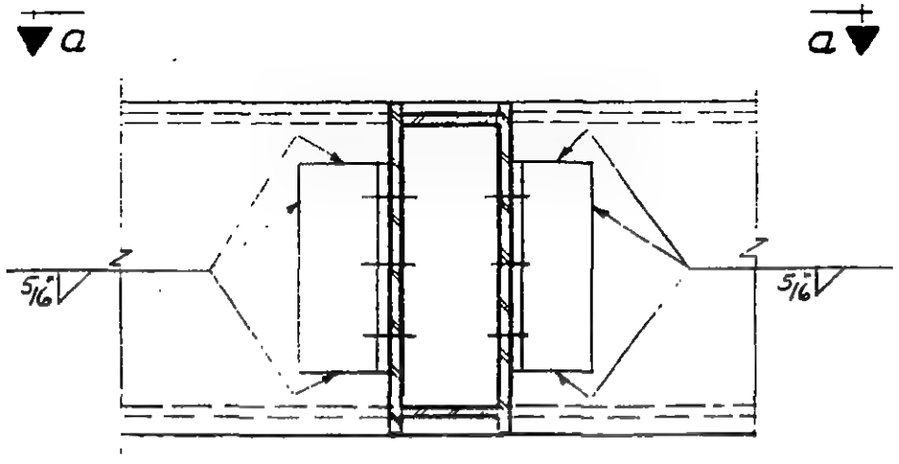

Elevation

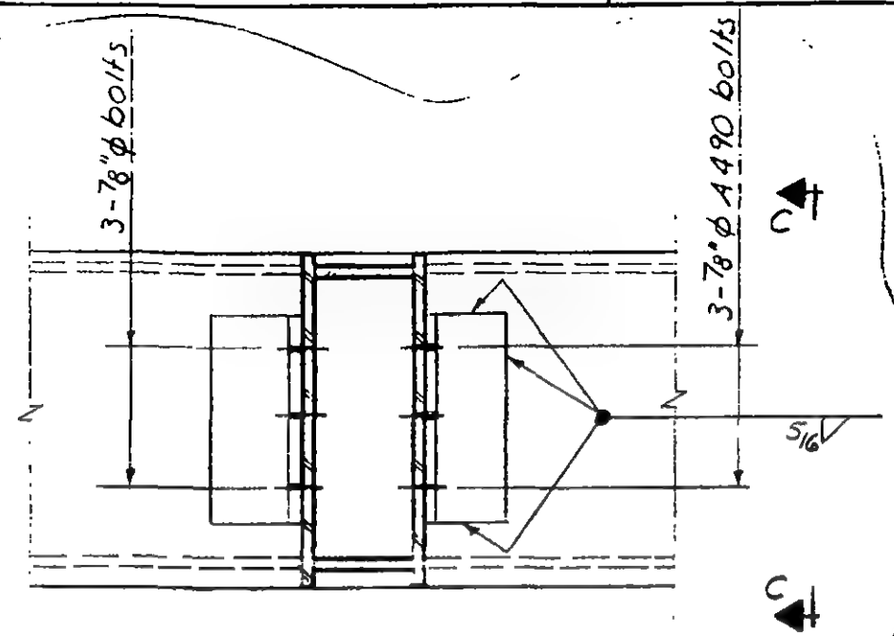

465A (Alternate)

Use where detail 450 is used as opposite end support

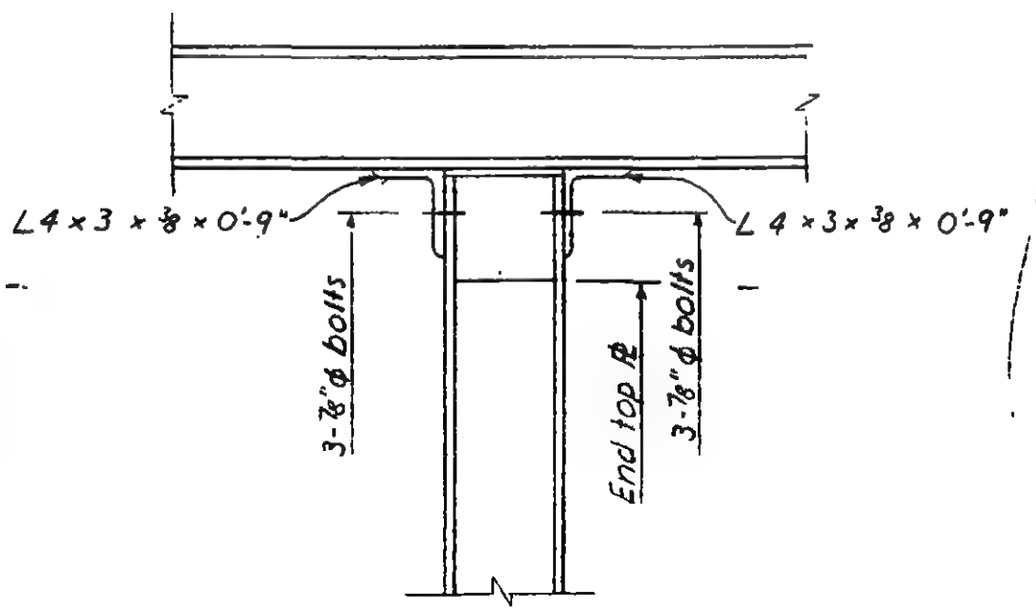

Section a-a

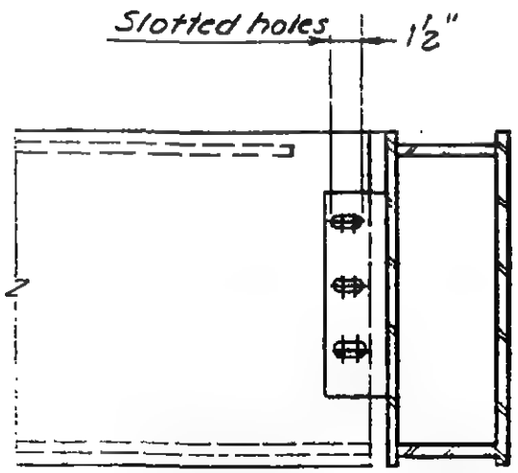

Section c-c (Alt.)

LESLIE E. ROBERTSON
LICENSED PROFESSIONAL ENGINEER
No. 34960
STATE OF NEW YORK

6-AB2-116

WORTHINGTON, SKILLING, HELLE & JACKSON — Civil & Structural Engineers

PROJECT: THE WORLD TRADE CENTER | TITLE: CONNECTION DETAIL 466 A. B | DATE: 6-5-67

REVISIONS

10-5-67
1-24-68
2-21-68

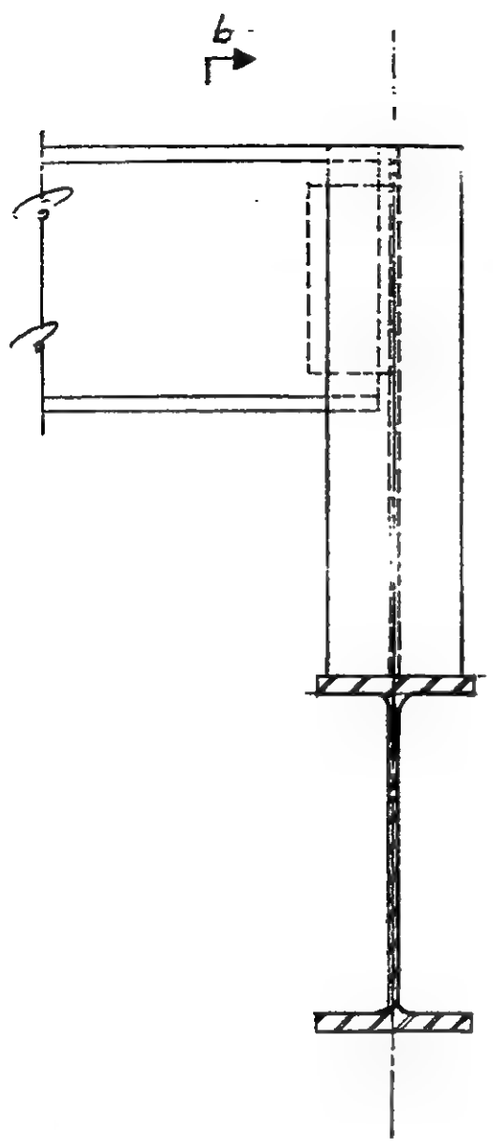

Section a-a

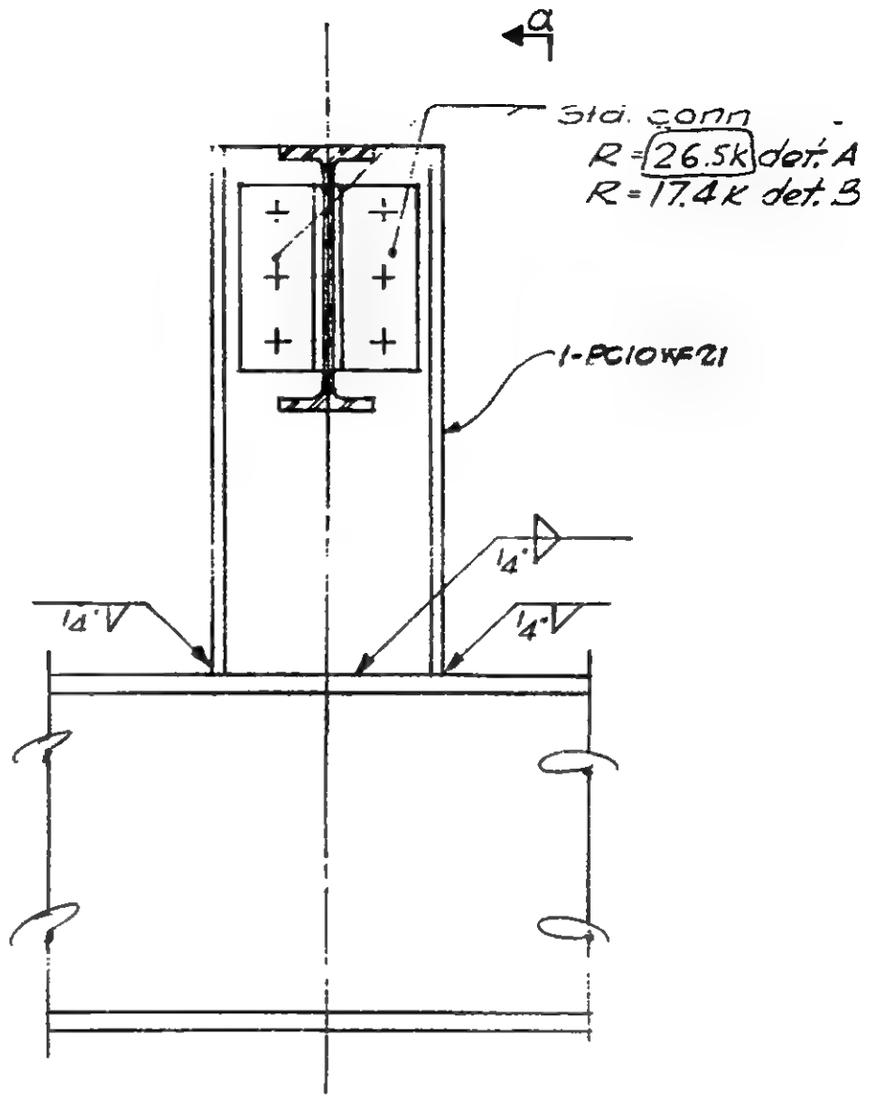

Section b-b

LICENSED PROFESSIONAL ENGINEER
LESLIE E. ROBERTSON
No. 34360
UNIVERSITY OF THE STATE OF NEW YORK

G-AB2-117

SKILLING - HELLE - CHRISTIANSEN - ROBERTSON Structural & Civil Engineers

PROJECT THE WORLD TRADE CENTER | TITLE CONNECTION DETAIL 467 A,B,C | DATE 6-5-67

REVISIONS
9-15-67
11-10-67
12-21-67

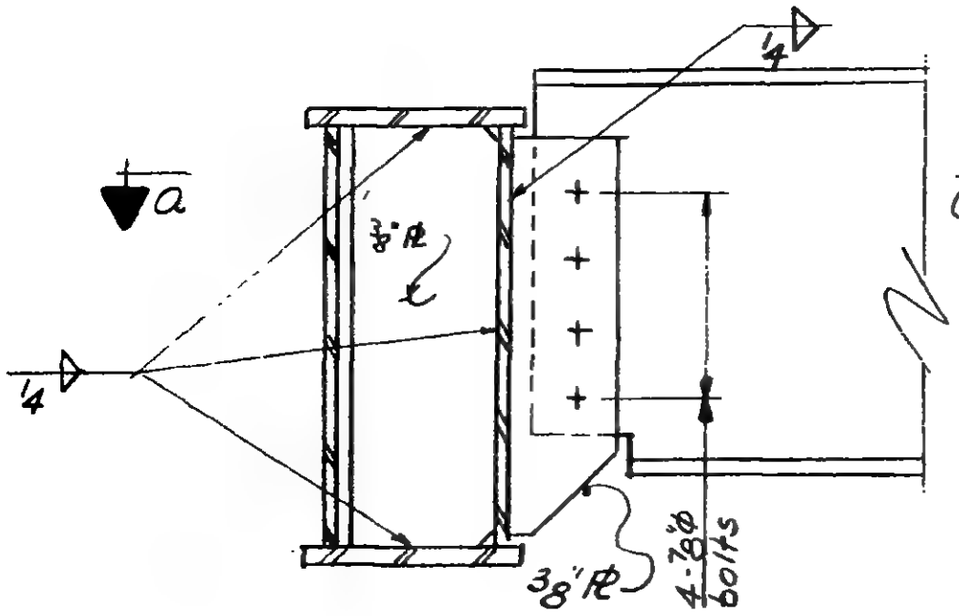

Elevation (467 A)

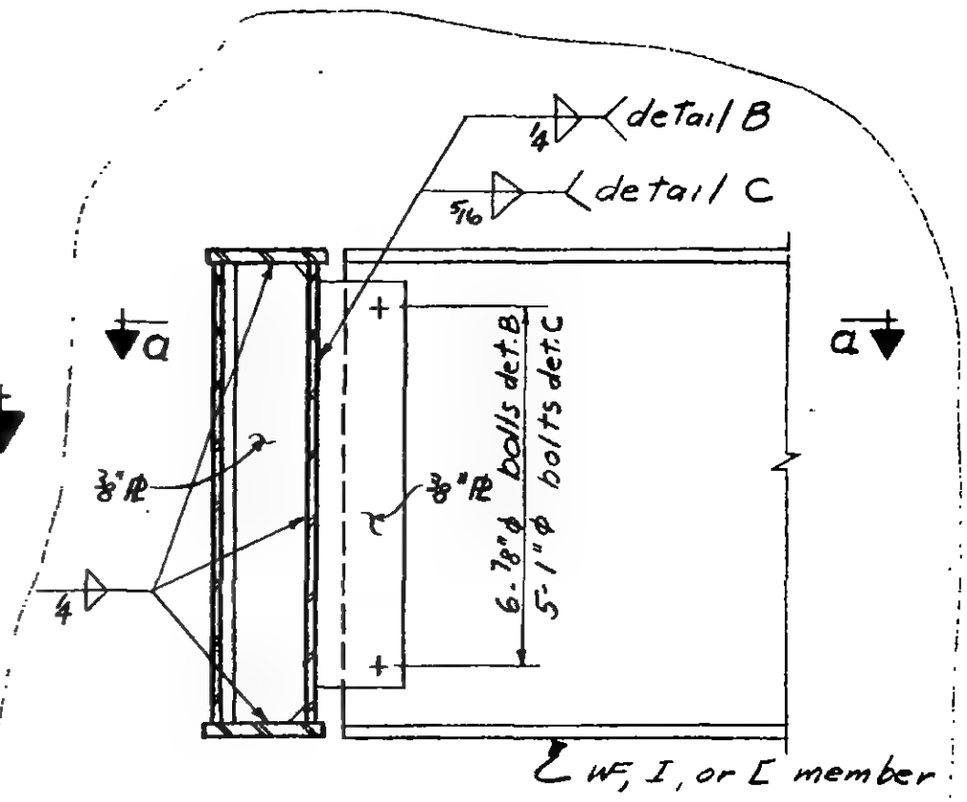

Elevation (467 B & C)

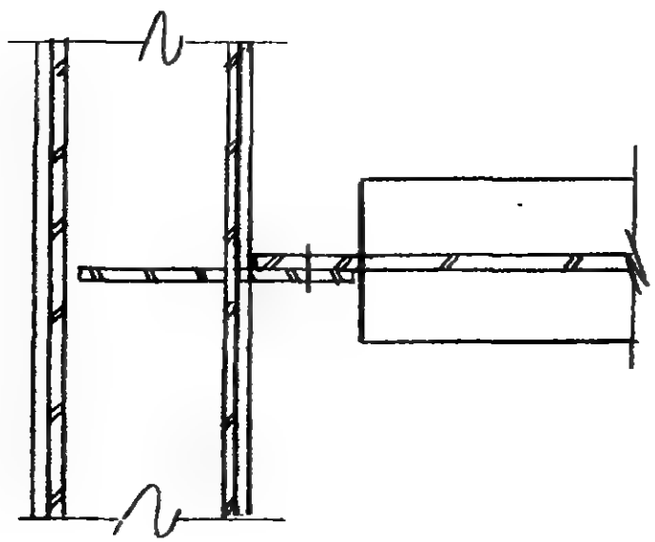

Section a-a

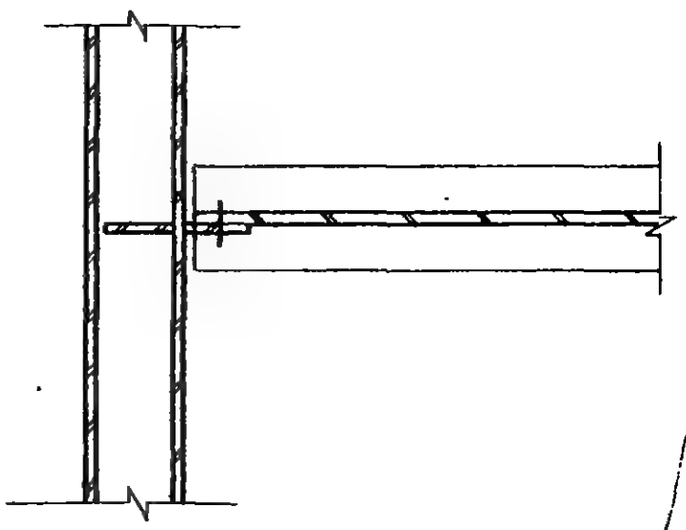

Section a-a

LICENSED PROFESSIONAL ENGINEER
LESLIE E. ROBERTSON
No. 34360
UNIVERSITY OF THE STATE OF NEW YORK

G-AB2-118

SKILLING - HELLE - CHRISTIANSEN - ROBERTSON Structural & Civil Engineers

PROJECT	TITLE	DATE
THE WORLD TRADE CENTER	CONNECTION DETAIL 469A.B	6-5-67

REVISIONS

7-15-67

10-5-67

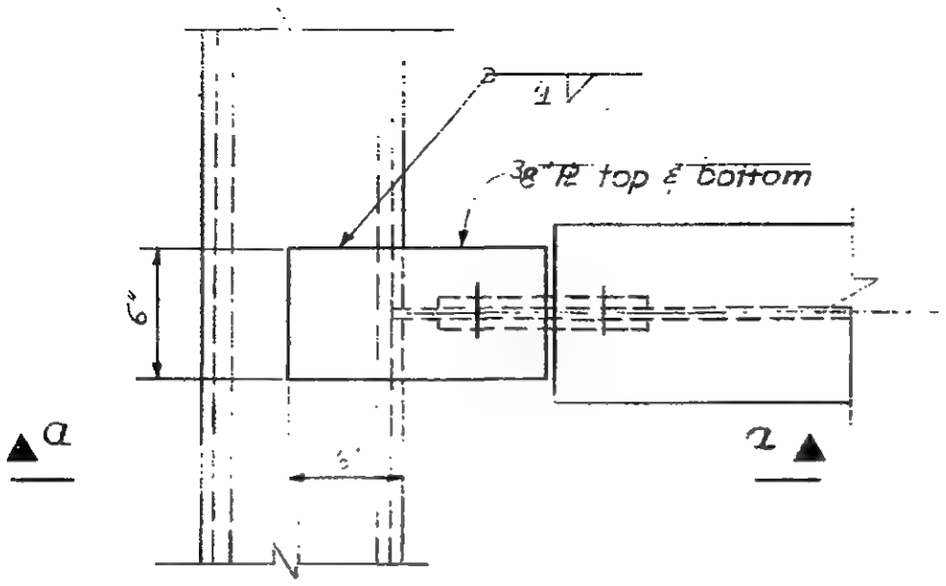

Plan

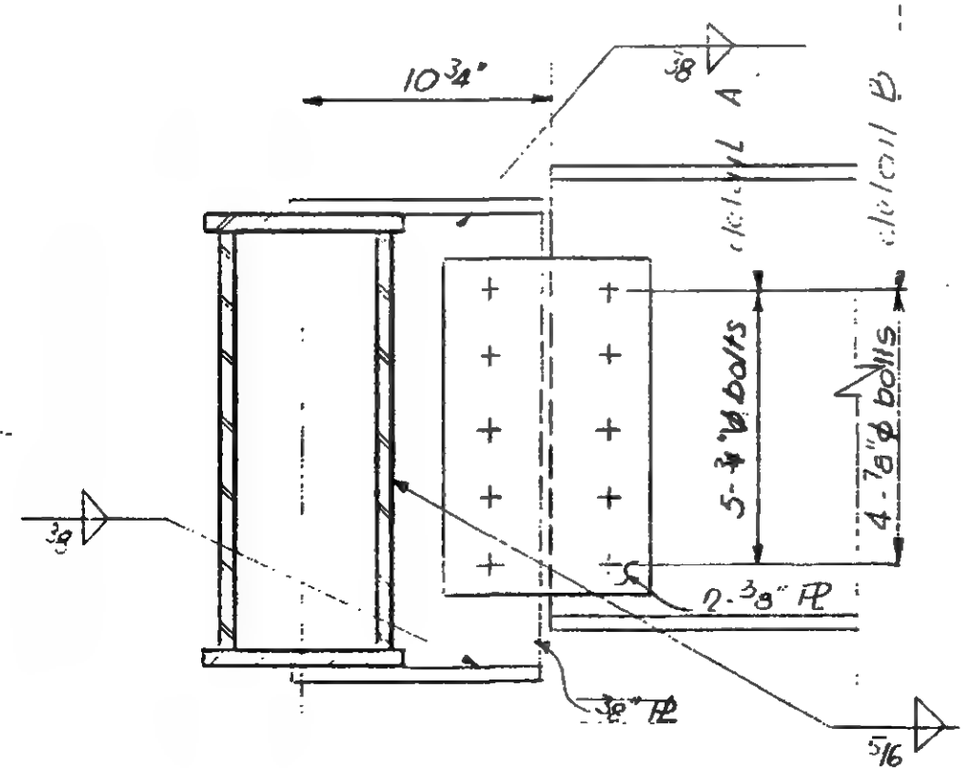

Section a-a

LICENSED PROFESSIONAL ENGINEER
LESLIE E. ROBERTSON
No. 34360
UNIVERSITY OF THE STATE OF NEW YORK

6-AB2-120

SKILLING - HELLE - CHRISTIANSEN - ROBERTSON Structural & Civil Engineers

PROJECT THE WORLD TRADE CENTER | TITLE CONNECTION DETAIL 470A | DATE 9-15-67

REVISIONS

11-10-67

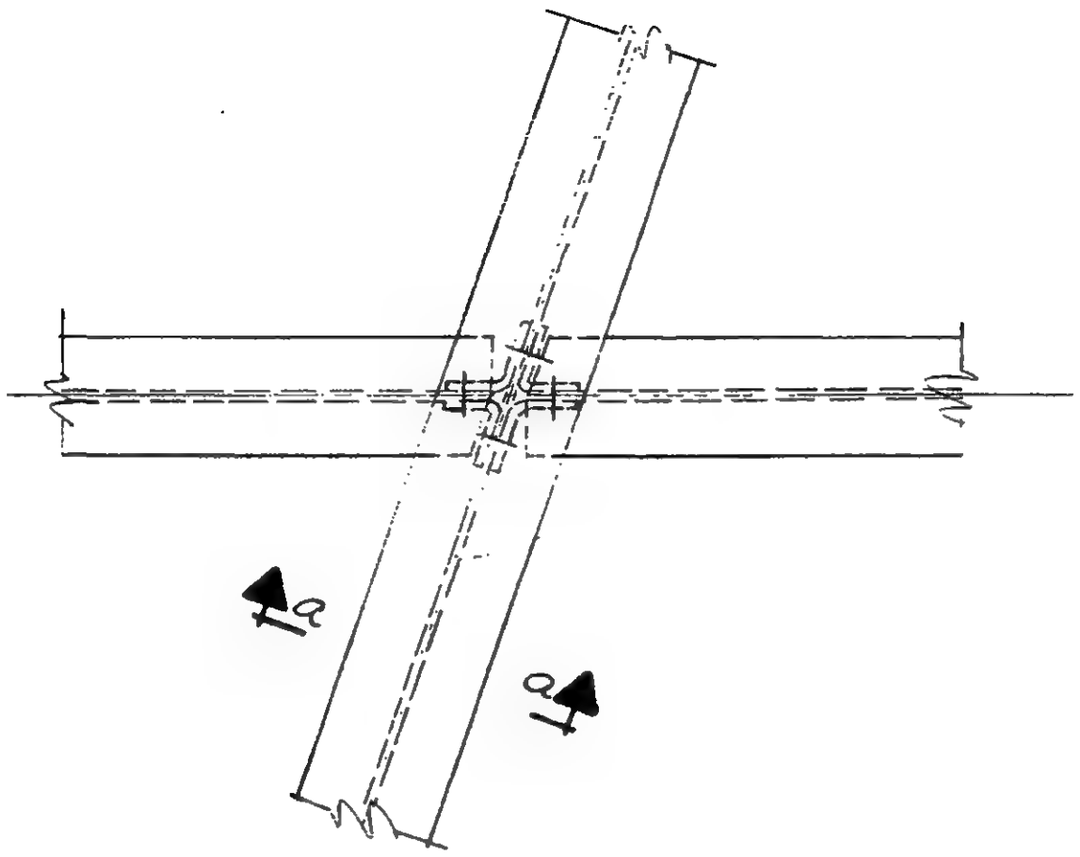

PLAN

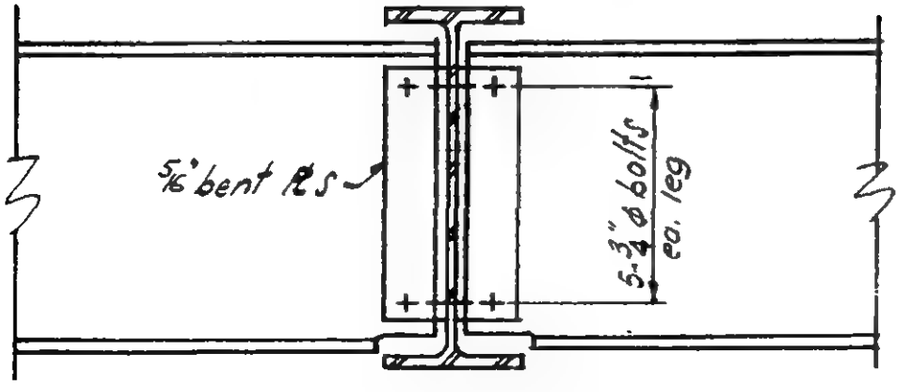

Section a-a

LICENSED PROFESSIONAL ENGINEER
LESLIE E. ROBERTSON
No. 34360
UNIVERSITY OF THE STATE OF NEW YORK

G-AB2-121

WORTHINGTON, SKILLING, HELLE & JACKSON — Civil & Structural Engineers

PROJECT THE WORLD TRADE CENTER | TITLE CONNECTION DETAILS 471 A, B, C | DATE 6-5-67

REVISIONS

10-2-67

2-21-68

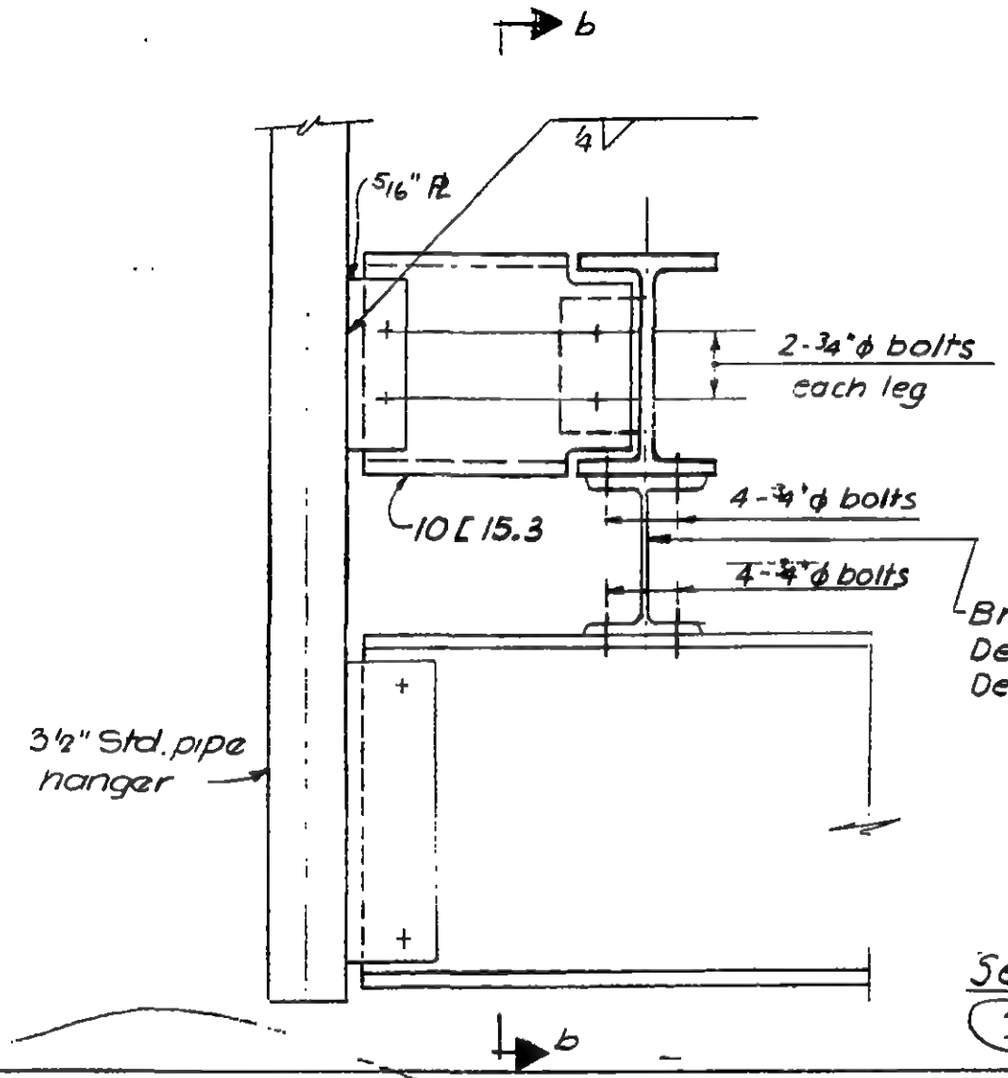

Section a-a
471 A & B

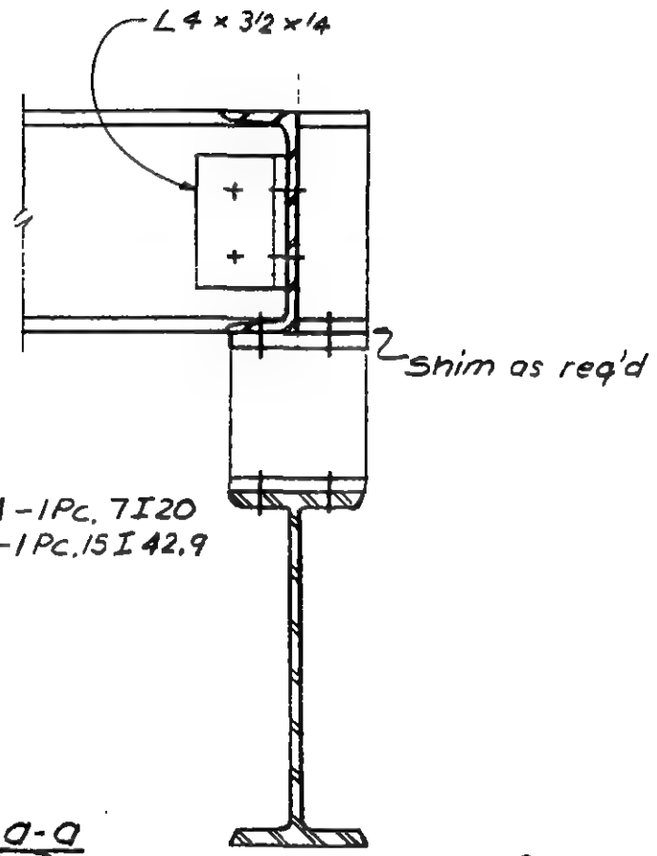

Section b-b

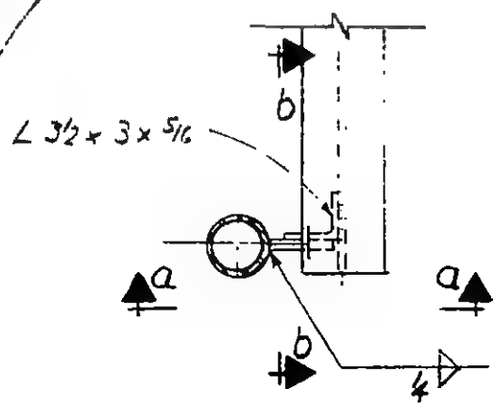

Plan 471C

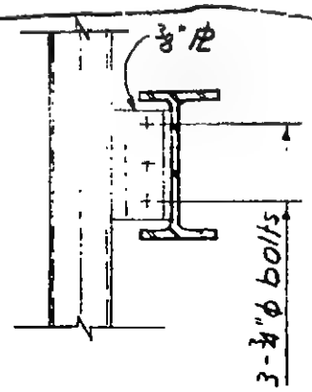

Section a-a

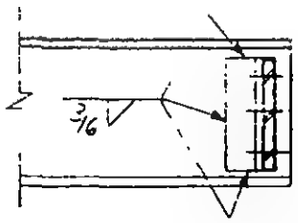

Section b-b

6-AB2-122

LICENSED PROFESSIONAL ENGINEER
LESLIE E. ROBERTSON
No. 34360
UNIVERSITY OF THE STATE OF NEW YORK

WORTHINGTON, SKILLING, HELLE & JACKSON — Civil & Structural Engineers

PROJECT: THE WORLD TRADE CENTER | TITLE: CONNECTION DETAIL 472 A, B, C, D, E, F & G | DATE: 8-5-67

REVISIONS

10-23-67
10-31-67

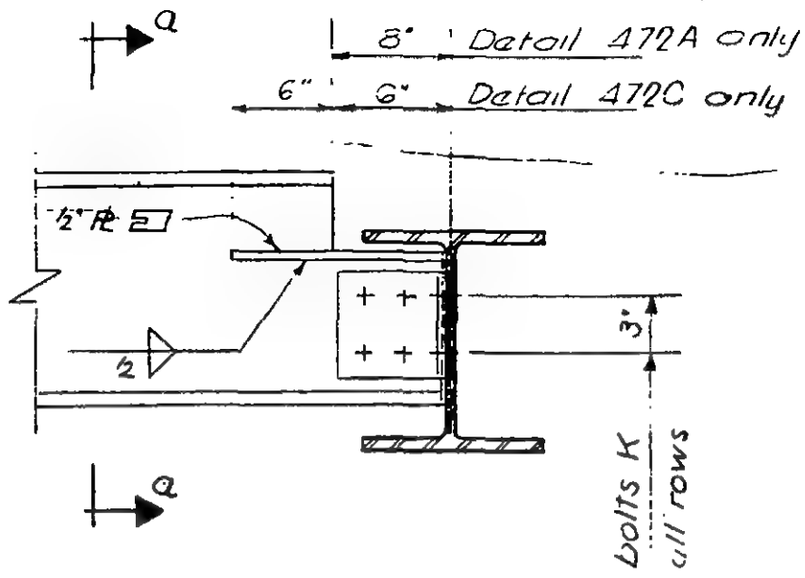

DETAIL A, B, C, D, E & G

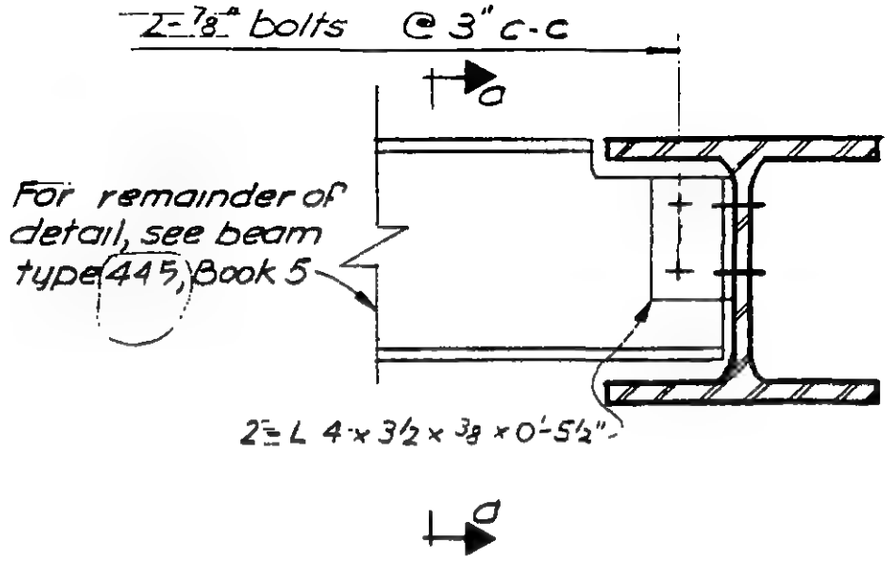

DETAIL 472 F

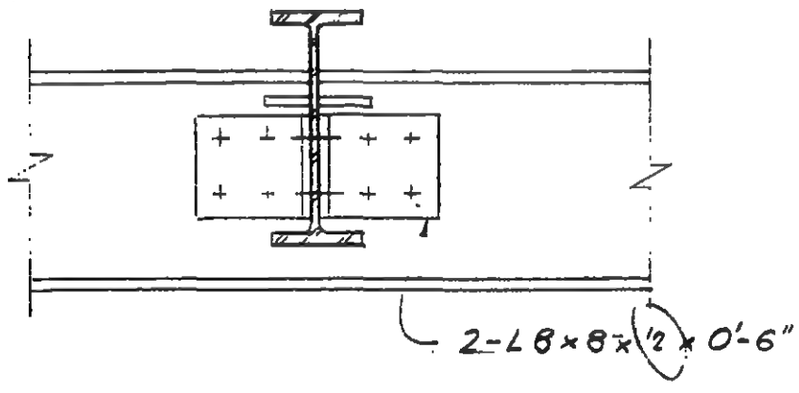

Section a-a

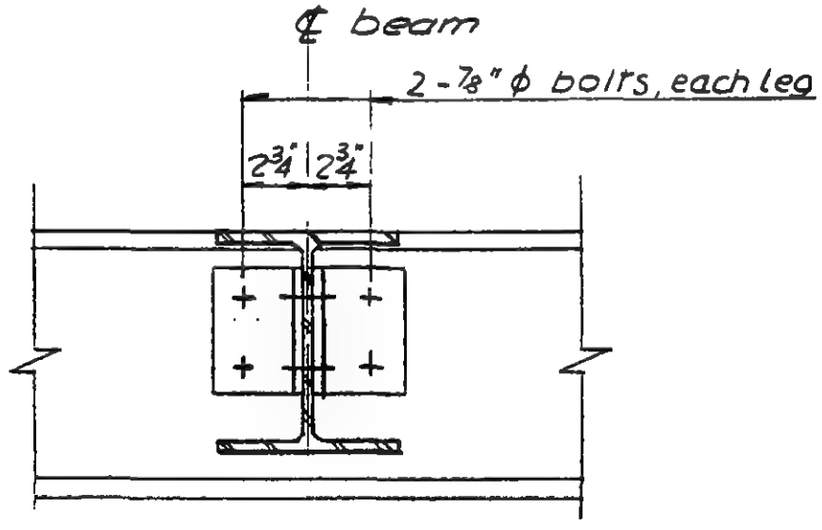

Section a-a

DETAIL A, B, C, D, E — bolts K - ⅞" ϕ bolts
DETAIL G — bolts K - 1" ϕ bolts

LICENSED PROFESSIONAL ENGINEER
LESLIE E. ROBERTSON
No. 34360
UNIVERSITY OF THE STATE OF NEW YORK

G-AB2-123

SKILLING - HELLE - CHRISTIANSEN - ROBERTSON Structural & Civil Engineers

PROJECT THE WORLD TRADE CENTER | TITLE CONNECTION DETAIL 472 H, I, J, K, L | DATE 5-7-68

REVISIONS

7-17-68

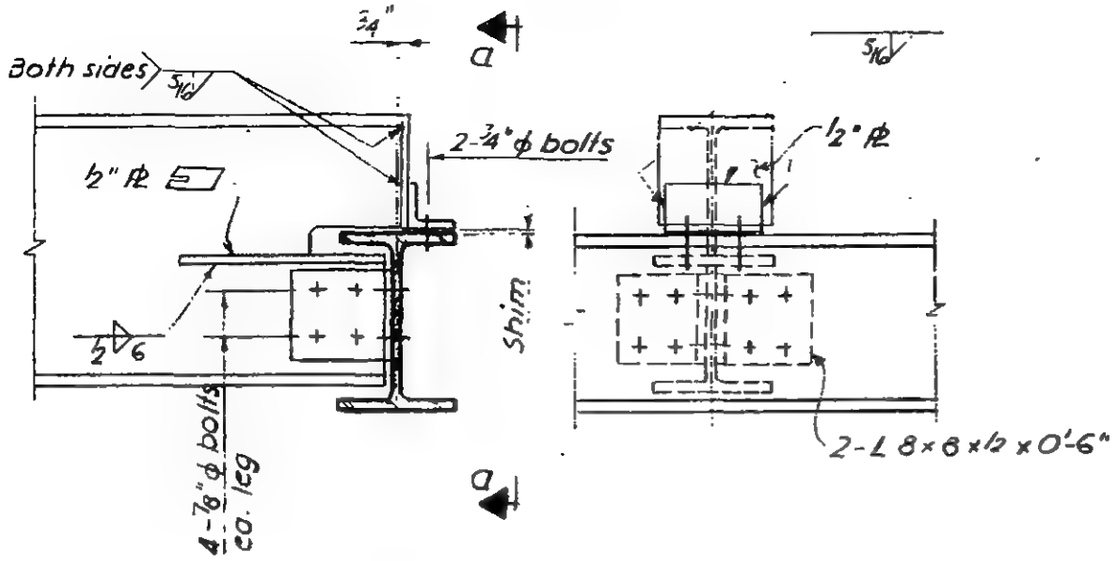

Section a-a

Detail 472H

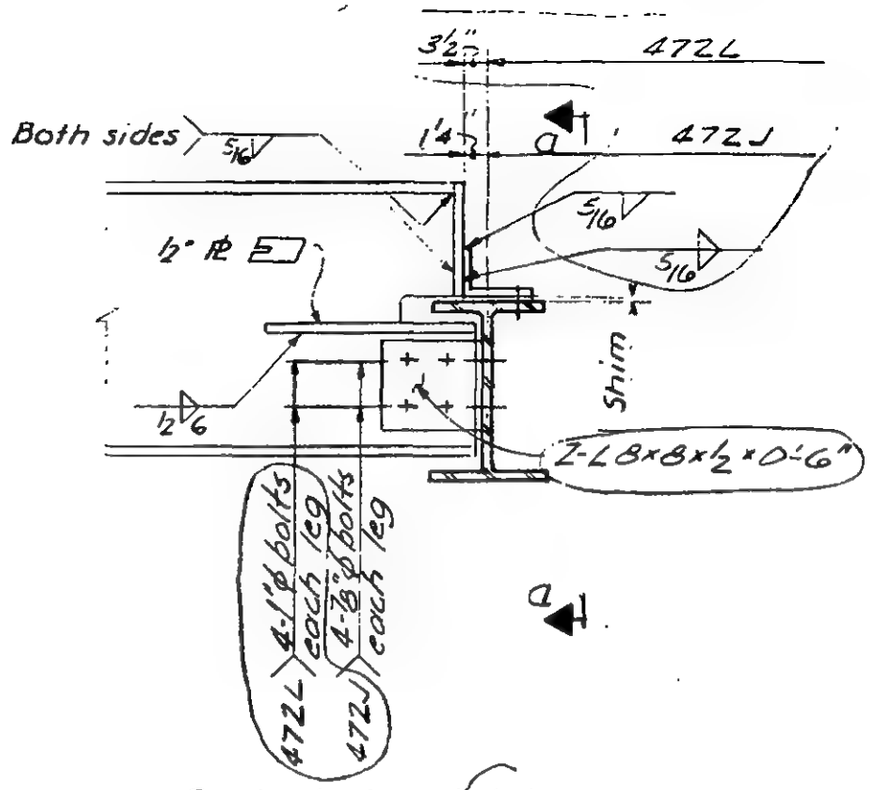

Detail 472J/L

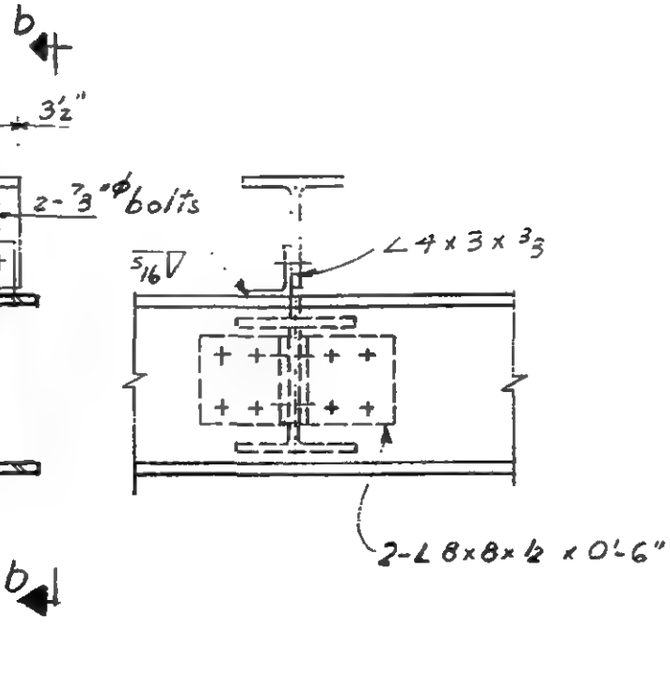

Section b-b

Detail 472 I

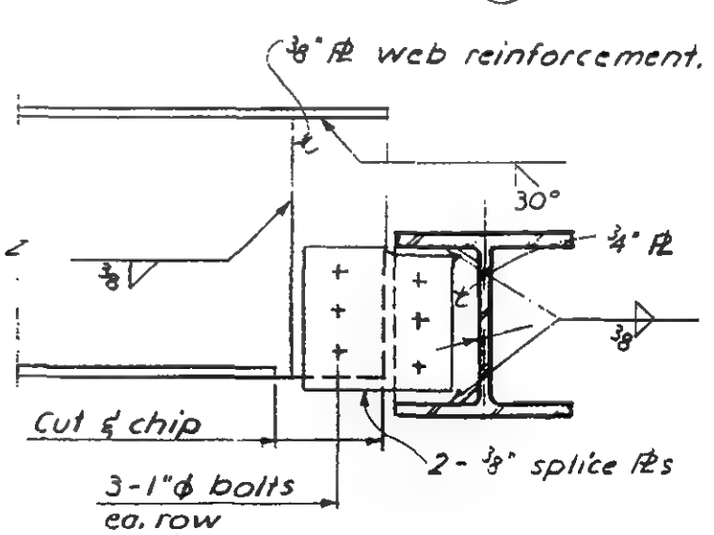

Detail 472 K

LICENSED PROFESSIONAL ENGINEER
LESLIE E. ROBERTSON
No. 34360
UNIVERSITY OF THE STATE OF NEW YORK

6-AB2-123.1

SKILLING - HELLE - CHRISTIANSEN - ROBERTSON Structural & Civil Engineers

PROJECT THE WORLD TRADE CENTER | TITLE CONNECTION DETAIL 473 A & B | DATE 1-14-67

REVISIONS

10-2-67

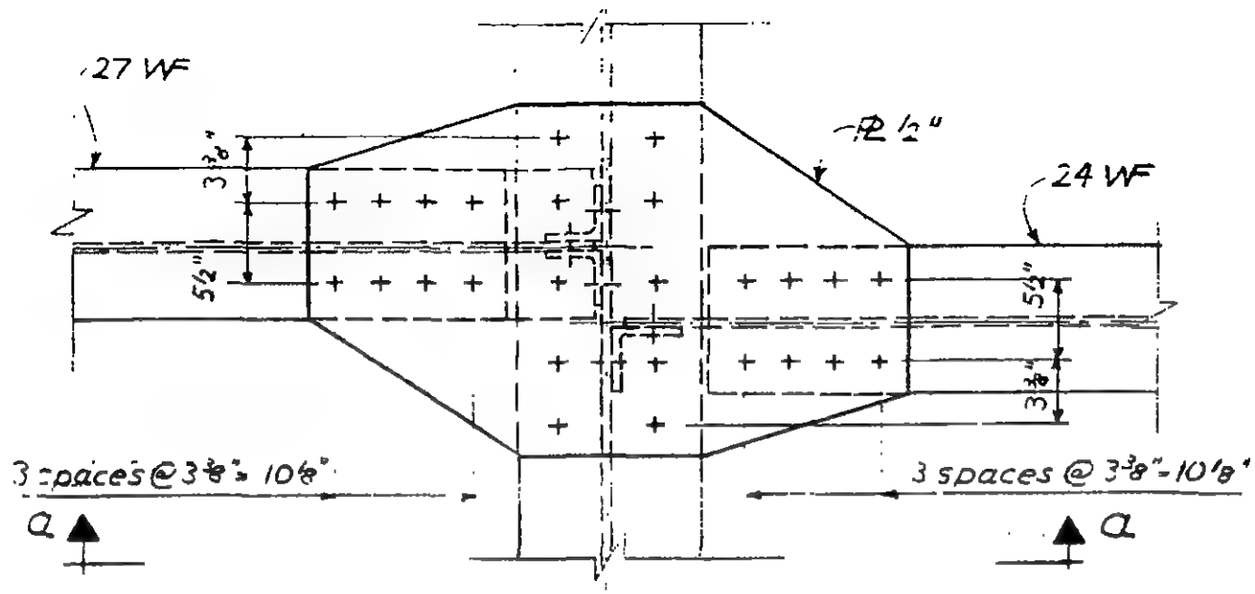

Plan

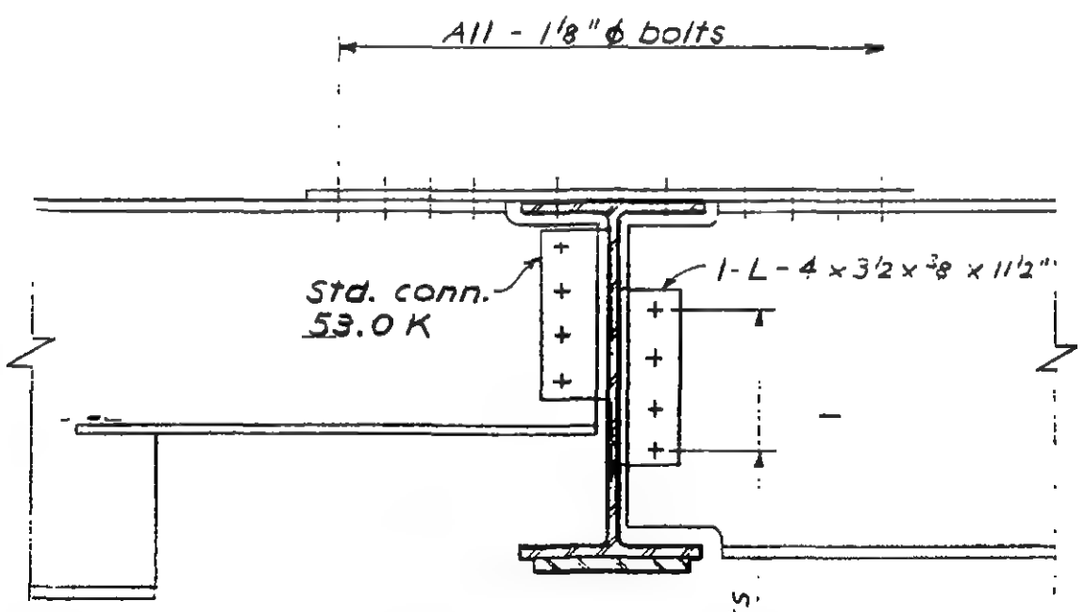

Section a-a

Detail 473 A

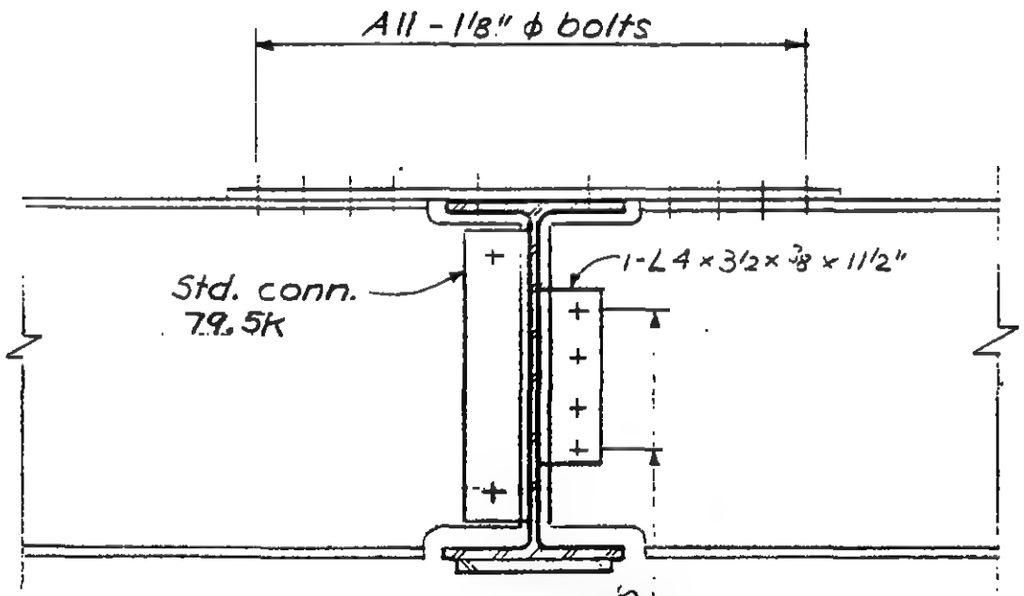

Section a-a

Detail 473 B

6-AB2-124

LICENSED PROFESSIONAL ENGINEER
LESLIE E. ROBERTSON
No. 34360
UNIVERSITY OF THE STATE OF NEW YORK

WORTHINGTON, SKILLING, HELLE & JACKSON — Civil & Structural Engineers

PROJECT THE WORLD TRADE CENTER | TITLE CONNECTION DETAIL 474 A | DATE 8-5-67

REVISIONS

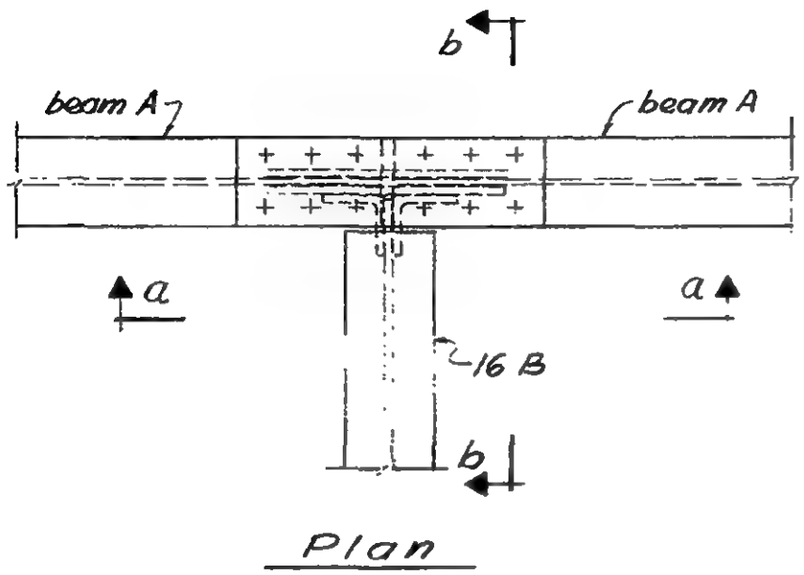

Plan

beams A	bolts K	bolts L	Ø P	Ø Q	Dim A
16 B	1"ϕ	¾"ϕ	½	½	0'-10"
16 WF	1⅛"ϕ	1"ϕ	⅝	½	0'-10"

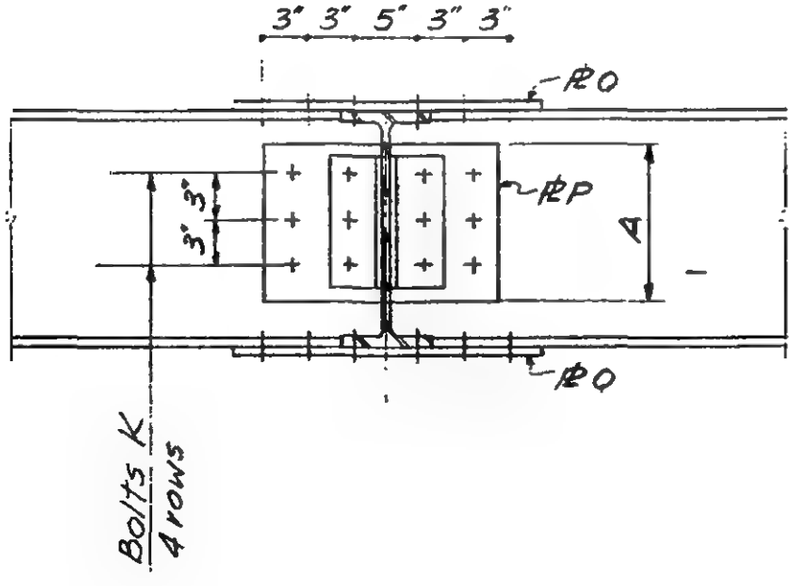

Section a-a

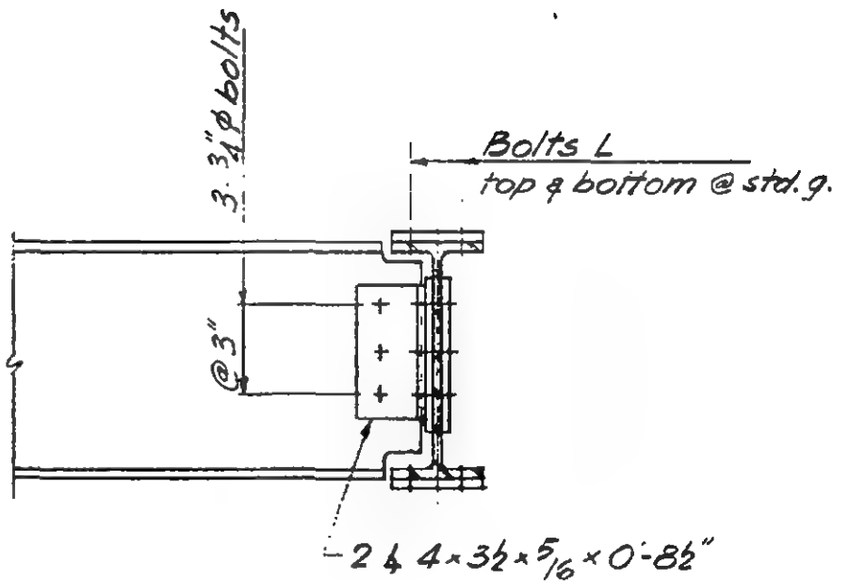

Section b-b

LICENSED PROFESSIONAL ENGINEER
LESLIE E. ROBERTSON
No. 34360
UNIVERSITY OF THE STATE OF NEW YORK

G-AB2-125

SKILLING - HELLE - CHRISTIANSEN - ROBERTSON Structural & Civil Engineers

PROJECT THE WORLD TRADE CENTER | TITLE CONNECTION DETAIL 475A,B | DATE 10-5-67

REVISIONS

1-23-67

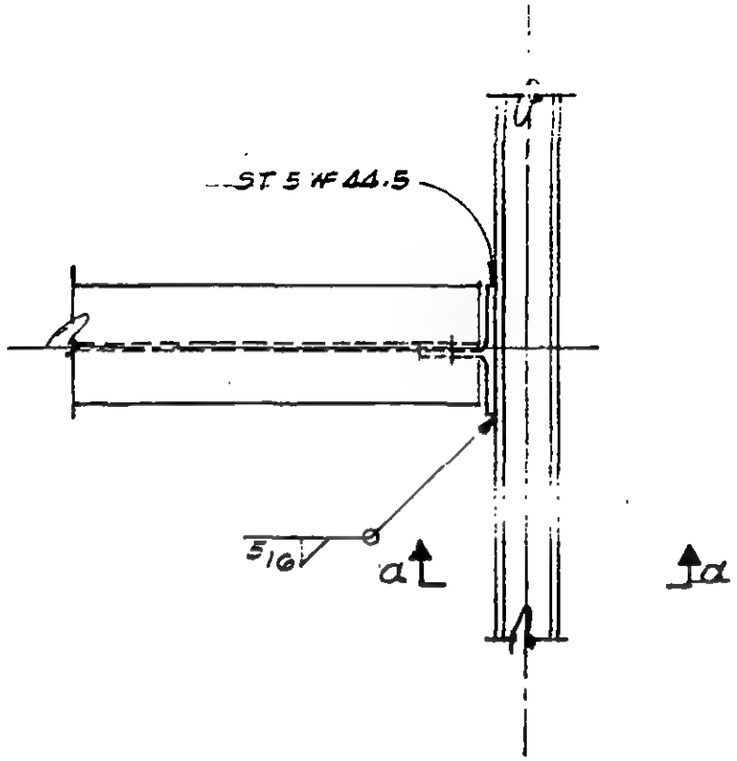

PLAN

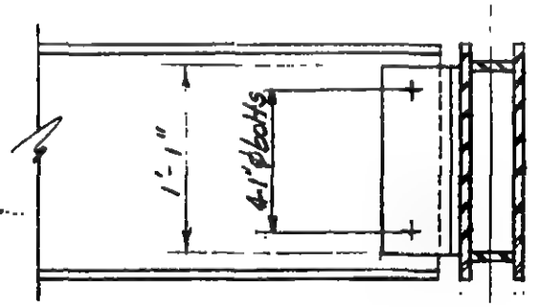

Section a-a

Detail 475A

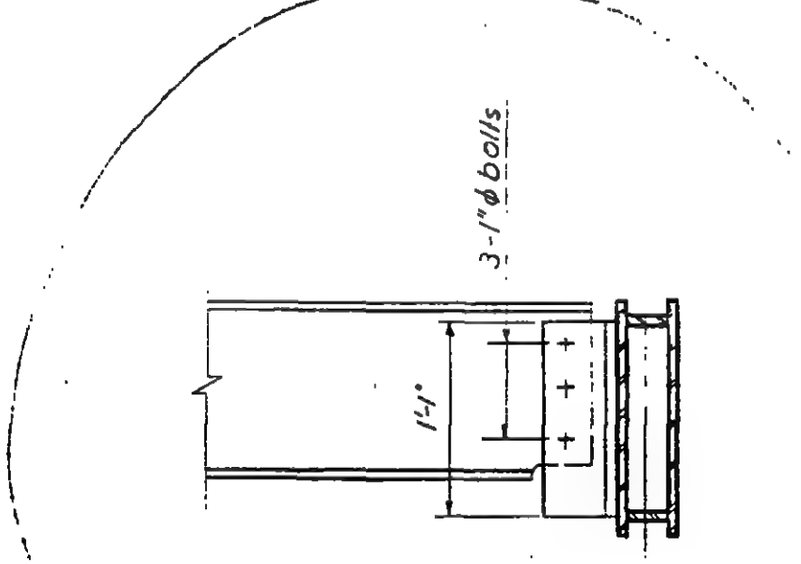

Section a-a

Detail 475B

LICENSED PROFESSIONAL ENGINEER
LESLIE E. ROBERTSON
No. 34360
UNIVERSITY OF THE STATE OF NEW YORK

G-AB2-126

SKILLING - HELLE - CHRISTIANSEN - ROBERTSON Structural & Civil Engineers

PROJECT THE WORLD TRADE CENTER | TITLE CONNECTION DETAIL 477A | DATE 11-23-67

REVISIONS

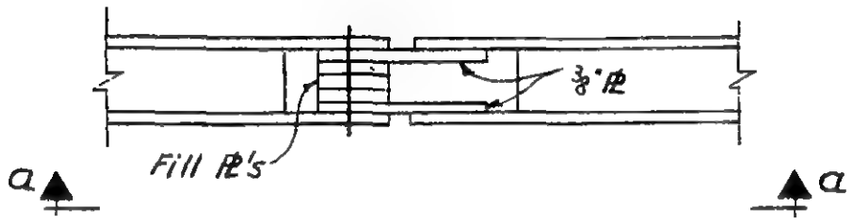

Plan

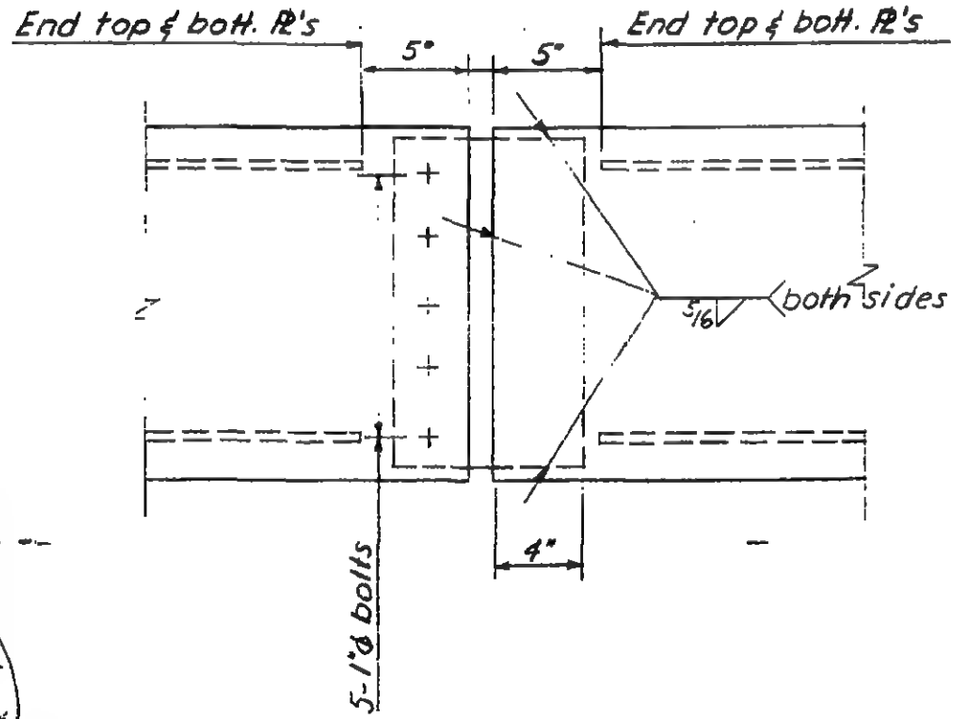

Section a-a

LICENSED PROFESSIONAL ENGINEER
LESLIE E. ROBERTSON
No. 34360
UNIVERSITY OF THE STATE OF NEW YORK

6-AB2-128

SKILLING - HELLE - CHRISTIANSEN - ROBERTSON Structural & Civil Engineers

PROJECT	TITLE	DATE
THE WORLD TRADE CENTER	CONNECTION DETAIL 479 A	6-30-67

REVISIONS

9-15-67

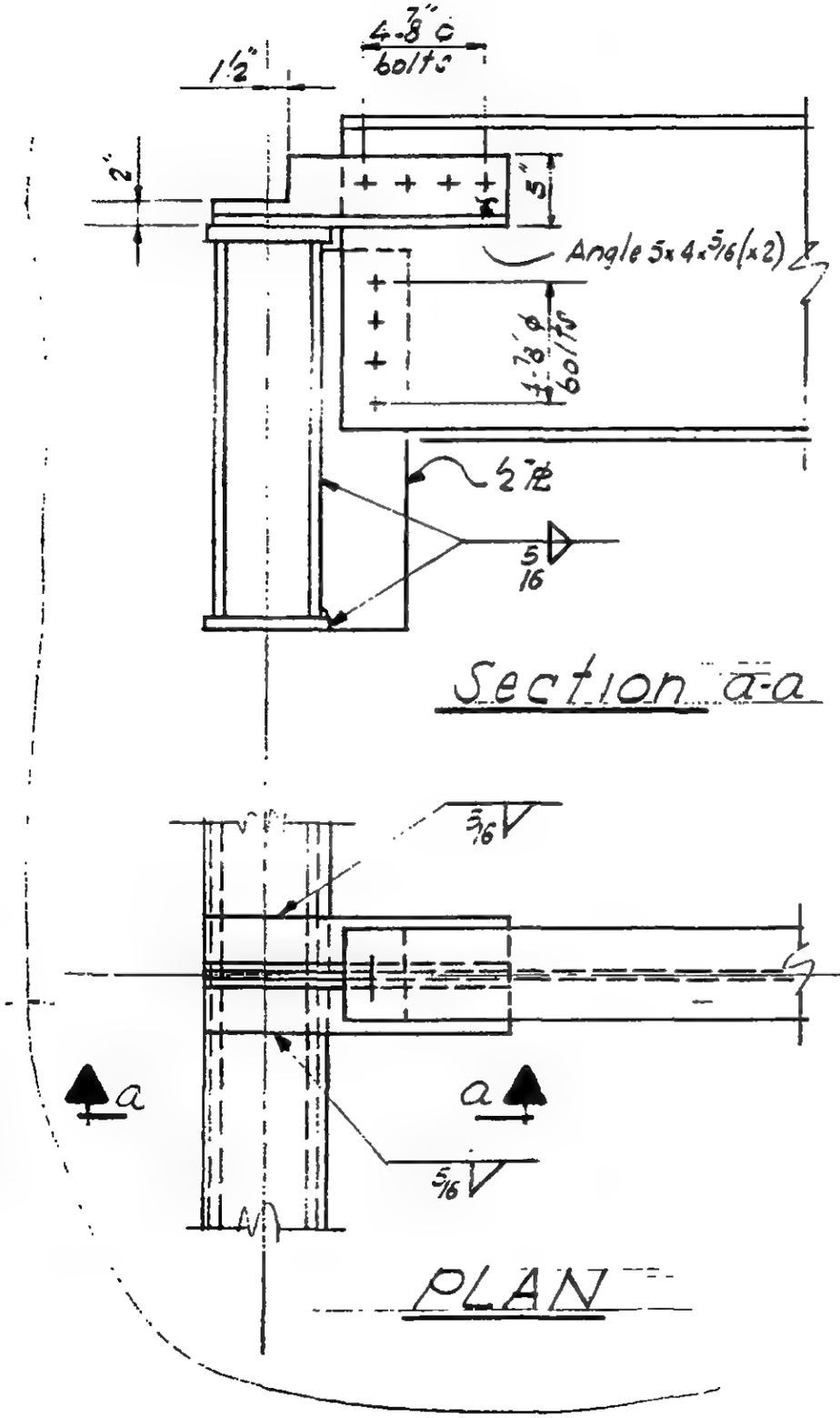

LICENSED PROFESSIONAL ENGINEER
LESLIE E. ROBERTSON
No. 34360
UNIVERSITY OF THE STATE OF NEW YORK

G-AB2-130

WORTHINGTON, SKILLING, HELLE & JACKSON — Civil & Structural Engineers

PROJECT WORLD TRADE CENTER | TITLE CONNECTION DETAIL 480 | DATE 6-19-67

REVISIONS

8-5-67

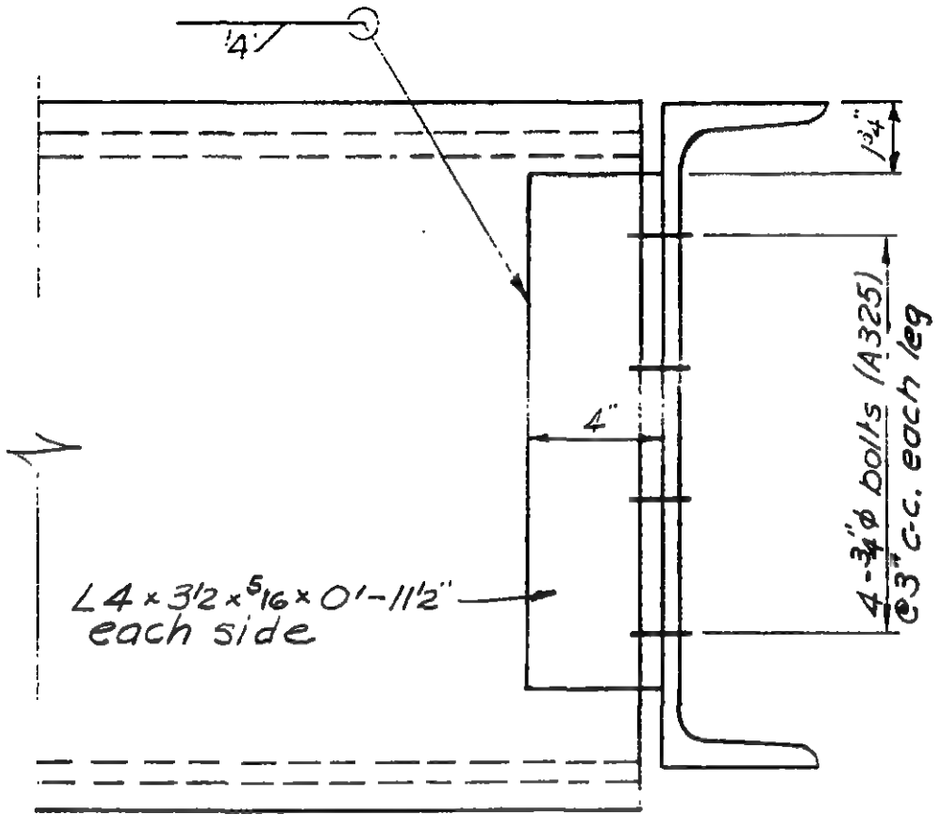

LICENSED PROFESSIONAL ENGINEER
LESLIE E. ROBERTSON
No. 34360
UNIVERSITY OF THE STATE OF NEW YORK

6-ABZ-131

SKILLING - HELLE - CHRISTIANSEN - ROBERTSON Structural & Civil Engineers

PROJECT THE WORLD TRADE CENTER | TITLE CONNECTION DETAIL 481 A | DATE 10-5-67

REVISIONS

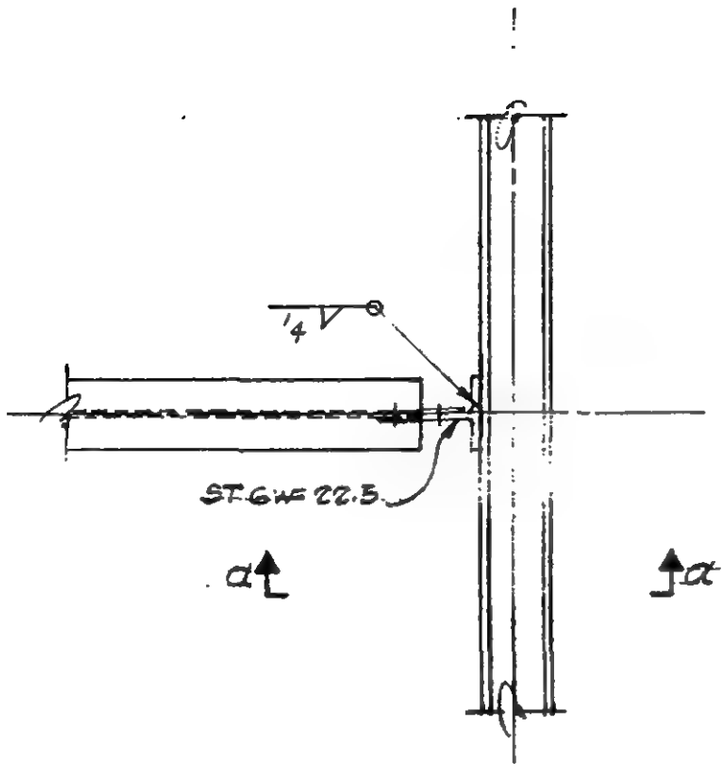

PLAN

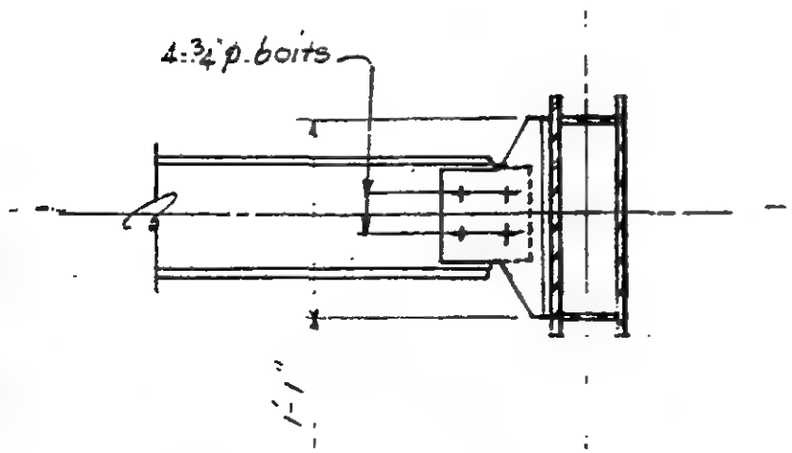

Section a-a

LICENSED PROFESSIONAL ENGINEER
LESLIE E. ROBERTSON
No. 34360
UNIVERSITY OF THE STATE OF NEW YORK

G-AB2-132

SKILLING - HELLE - CHRISTIANSEN - ROBERTSON Structural & Civil Engineers

PROJECT THE WORLD TRADE CENTER | TITLE CONNECTION DETAIL #82 A, B, C | DATE 7-14-67

REVISIONS

10-2-67
12-21-67
1-24-68

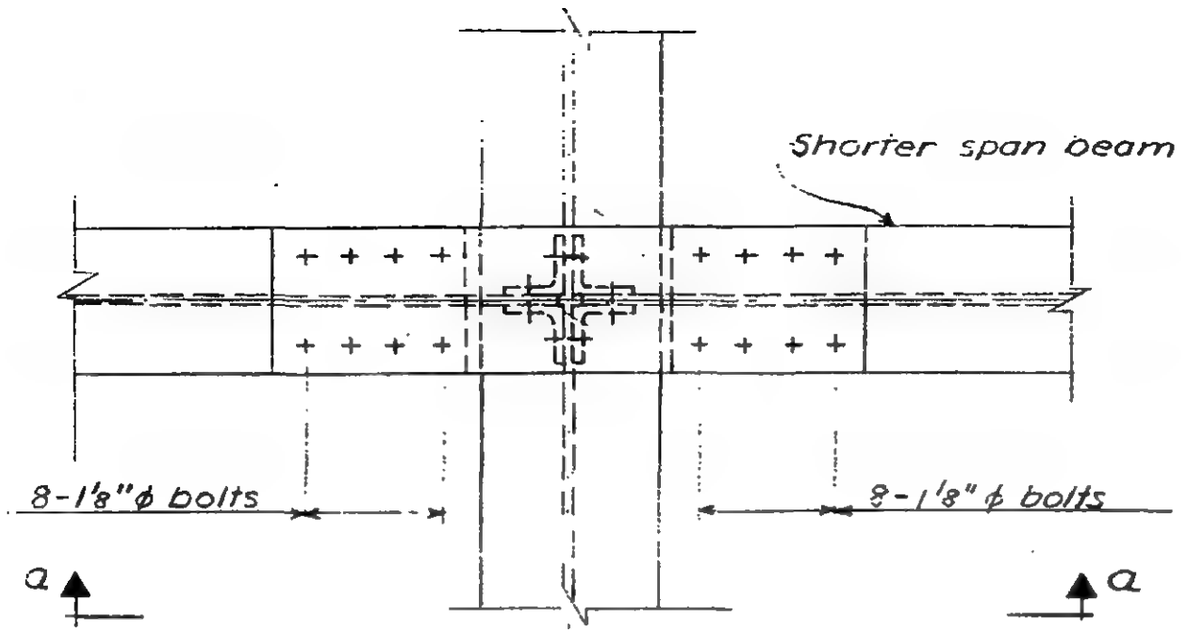

Plan

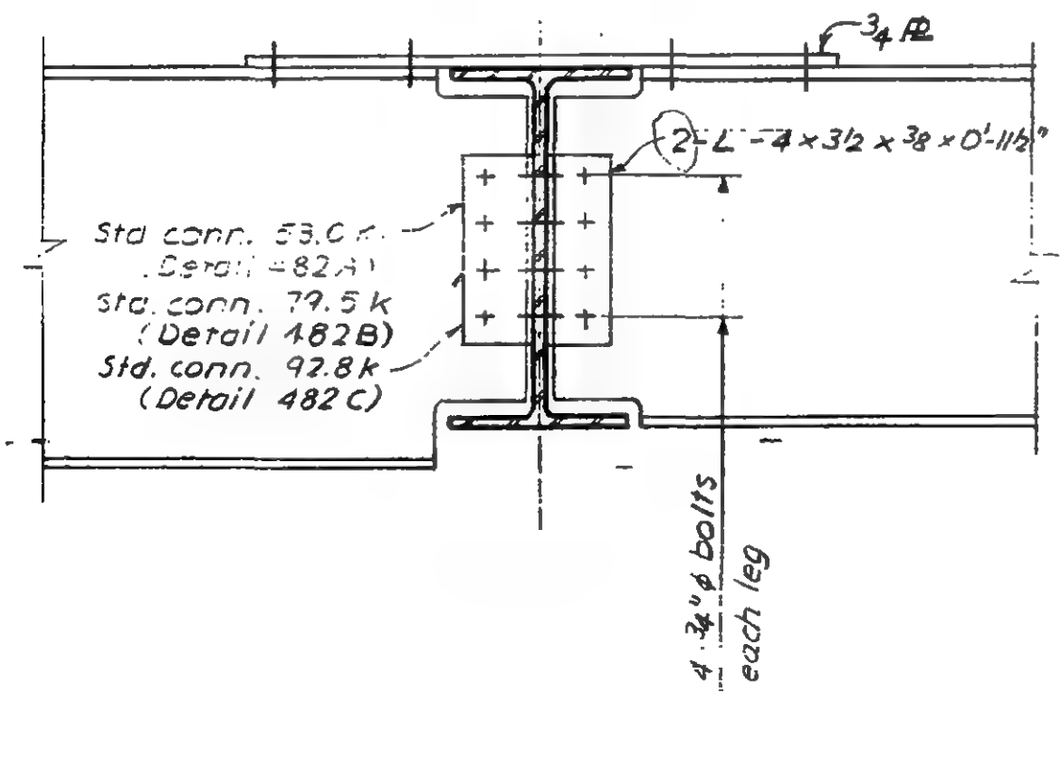

Section a-a

LICENSED PROFESSIONAL ENGINEER
LESLIE E. ROBERTSON
No. 34360
UNIVERSITY OF THE STATE OF NEW YORK

6-AB2-133

SKILLING - HELLE - CHRISTIANSEN - ROBERTSON Structural & Civil Engineers

PROJECT THE WORLD TRADE CENTER | TITLE CONNECTION DETAIL 483 | DATE 9-29-67

REVISIONS

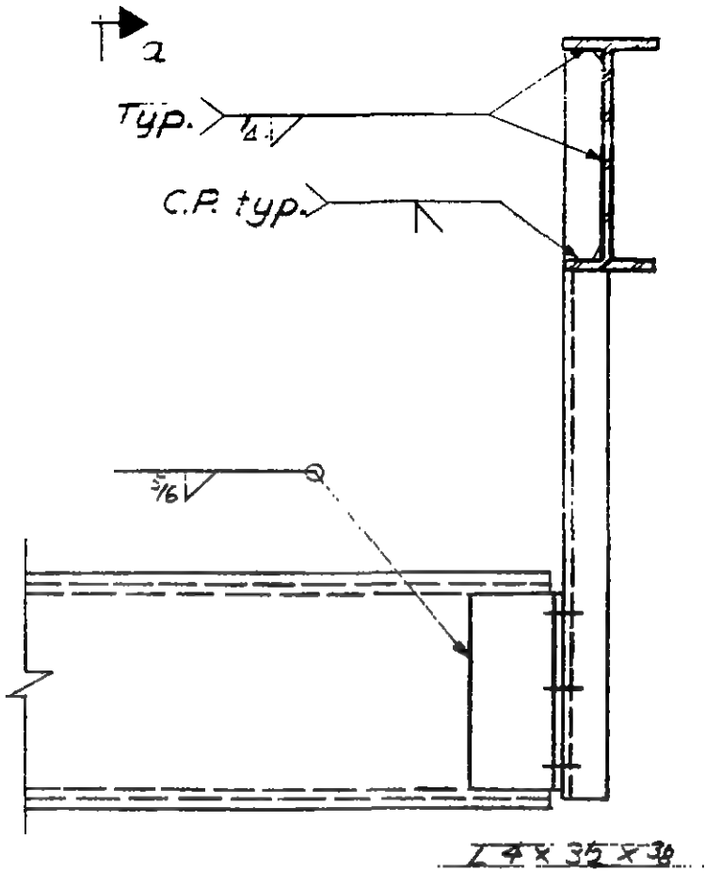

Elevation

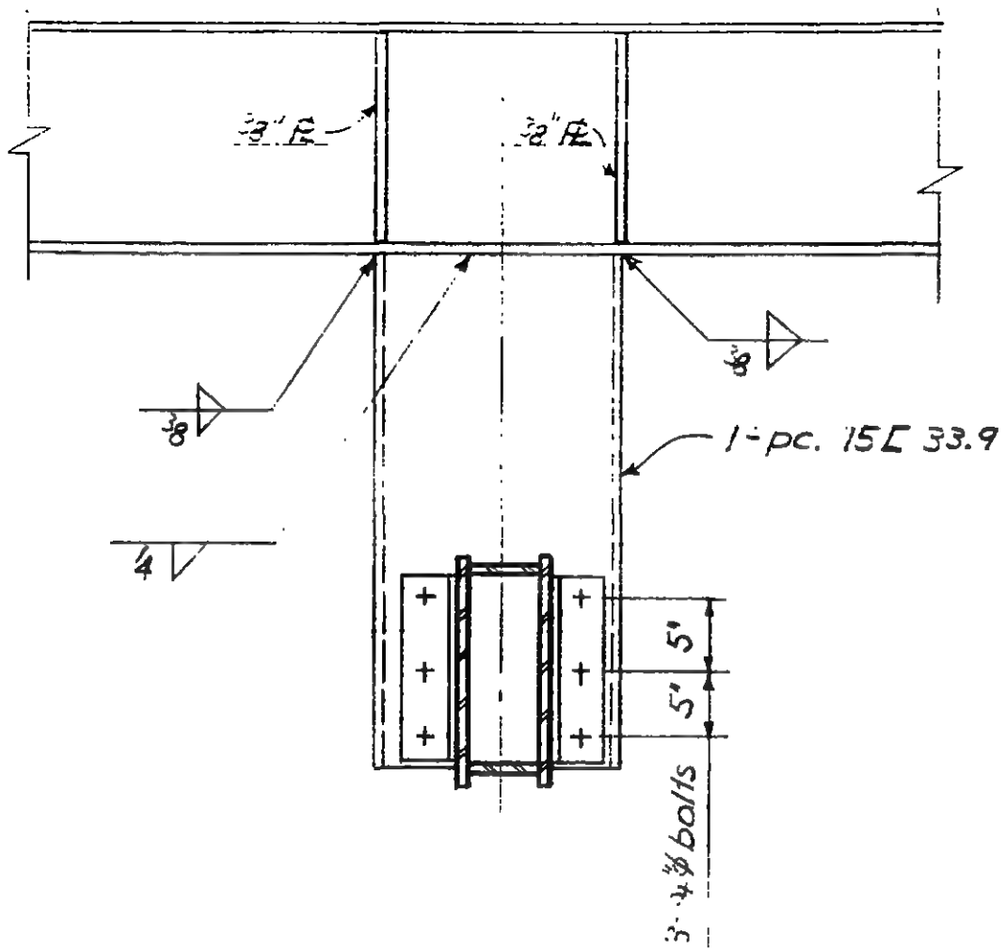

Section a-a

LICENSED PROFESSIONAL ENG'R
LESLIE E. ROBERTSON
No. 34360
UNIVERSITY OF THE STATE OF NEW YORK

6-AB2-134

WORTHINGTON, SKILLING, HELLE & JACKSON — Civil & Structural Engineers

PROJECT THE WORLD TRADE CENTER | TITLE CONNECTION DETAIL 484 | DATE 6-30-67

REVISIONS

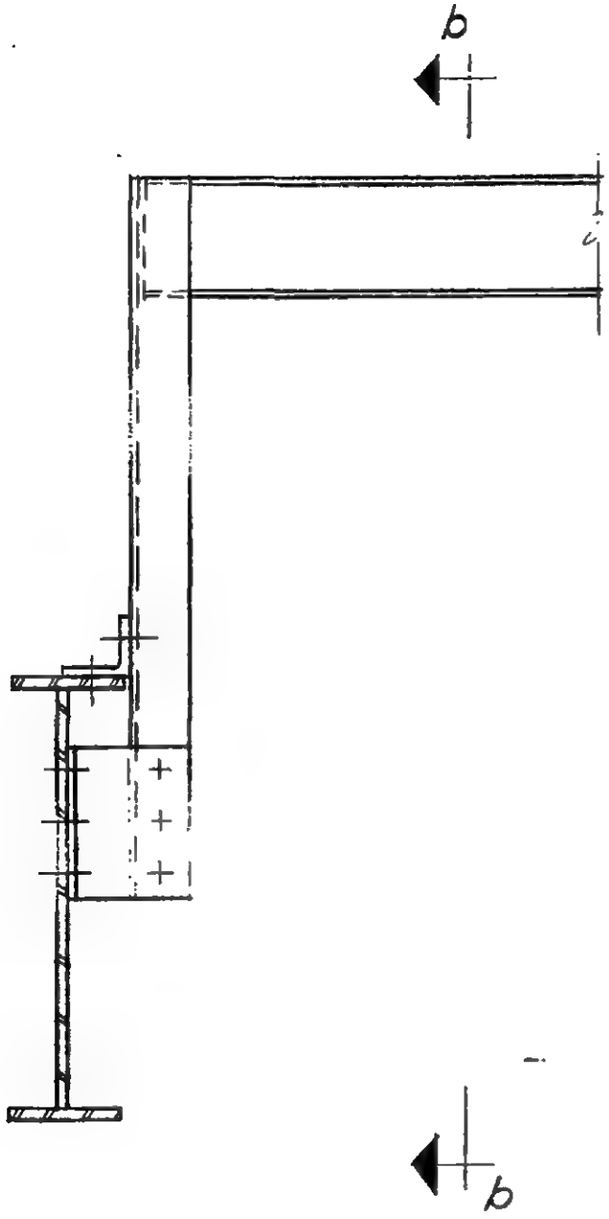

Section a-a

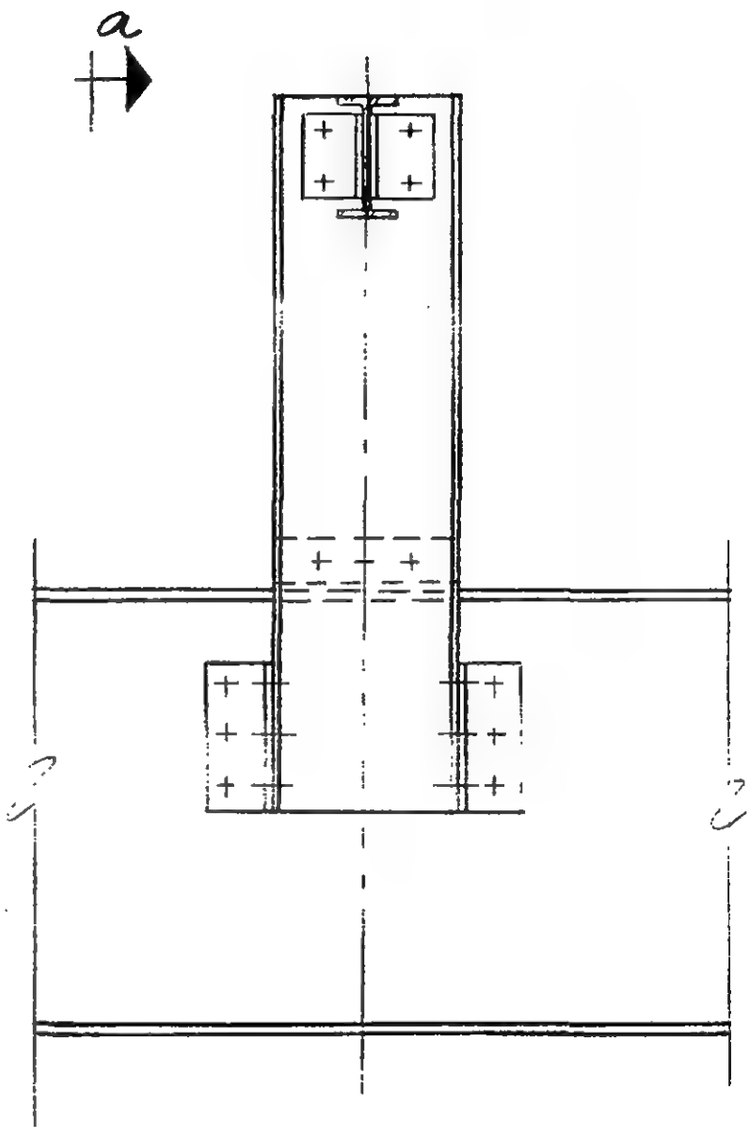

Section b-b

LICENSED PROFESSIONAL ENGINEER
LESLIE E. ROBERTSON
No. 34360
UNIVERSITY OF THE STATE OF NEW YORK

6-AB2-135

SKILLING - HELLE - CHRISTIANSEN - ROBERTSON Structural & Civil Engineers

PROJECT THE WORLD TRADE CENTER | TITLE CONNECTION DETAIL 485 A | DATE 10-5-67

REVISIONS

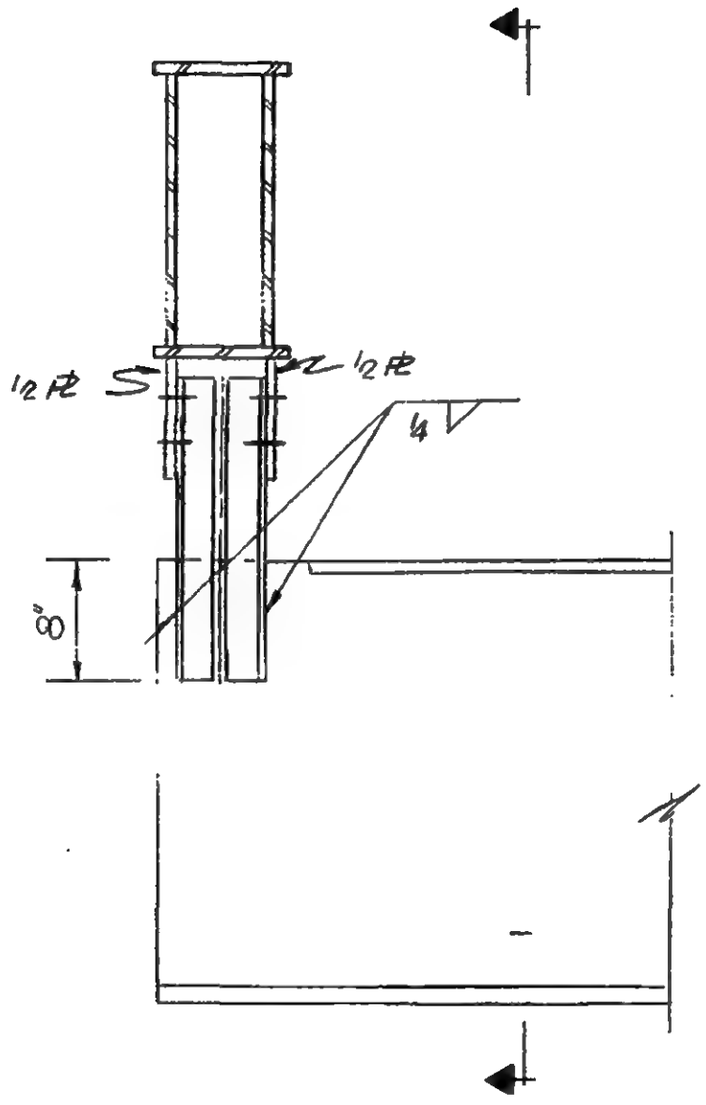

Elevation

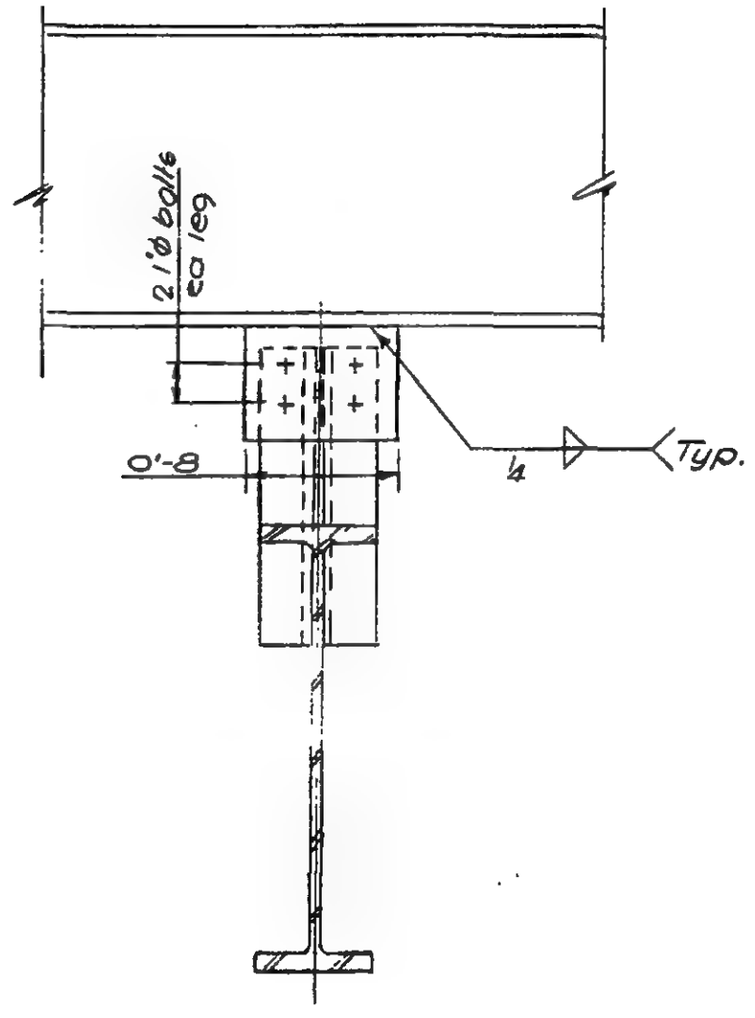

Section a-a

LESLIE E. ROBERTSON
No. 34360
UNIVERSITY OF THE STATE OF NEW YORK

6-AB2-136

SKILLING - HELLE - CHRISTIANSEN - ROBERTSON Structural & Civil Engineers

PROJECT THE WORLD TRADE CENTER | TITLE CONNECTION DETAIL -486A | DATE 10-5-67

REVISIONS

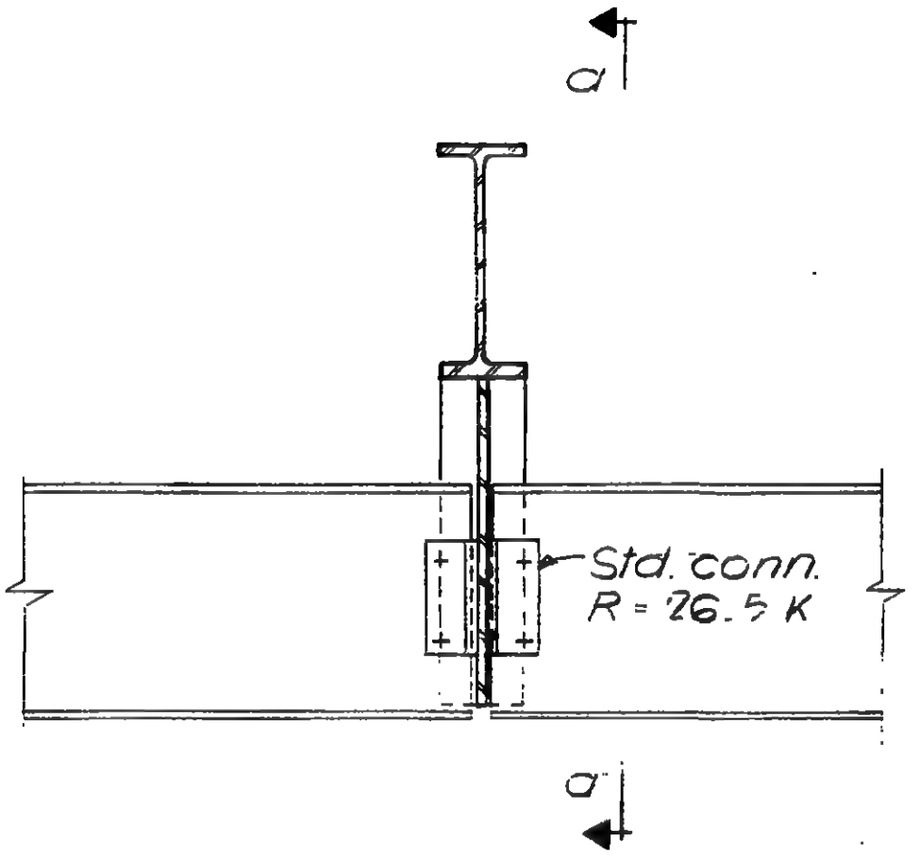

Elevation b-b

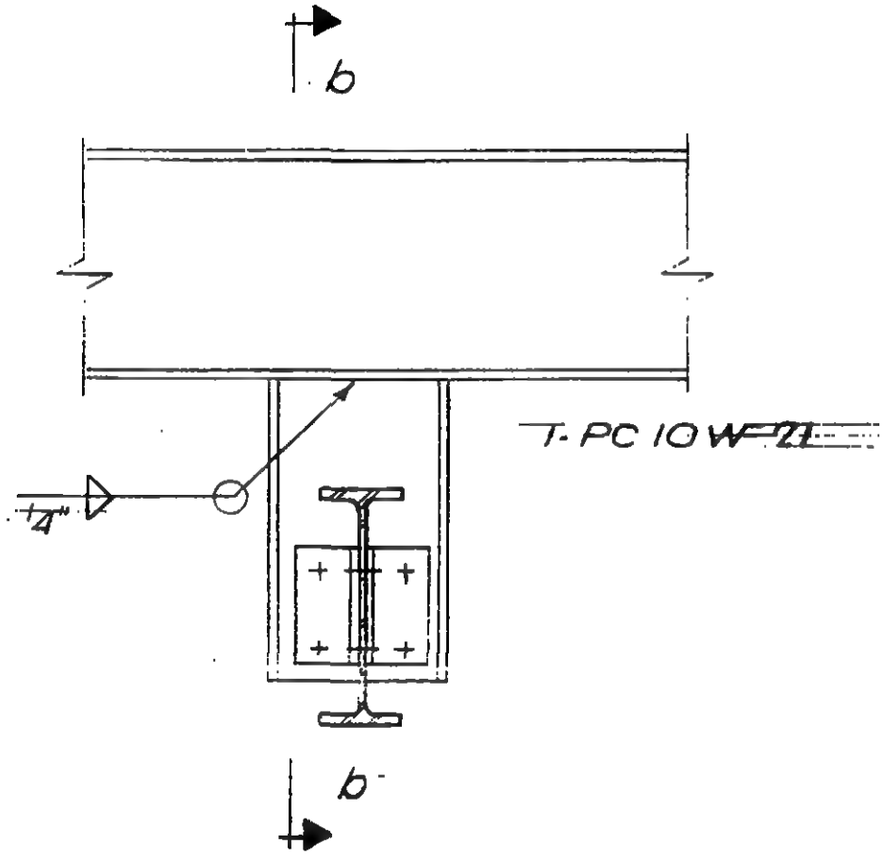

Section a-a

LICENSED PROFESSIONAL ENGINEER
LESLIE E. ROBERTSON
NO. 34360
STATE OF NEW YORK
NC

G-ABZ-137

WORTHINGTON, SKILLING, HELLE & JACKSON — Civil & Structural Engineers

PROJECT THE WORLD TRADE CENTER | TITLE CONNECTION DETAIL. 487 A | DATE 6-30-67

REVISIONS

9-15-67

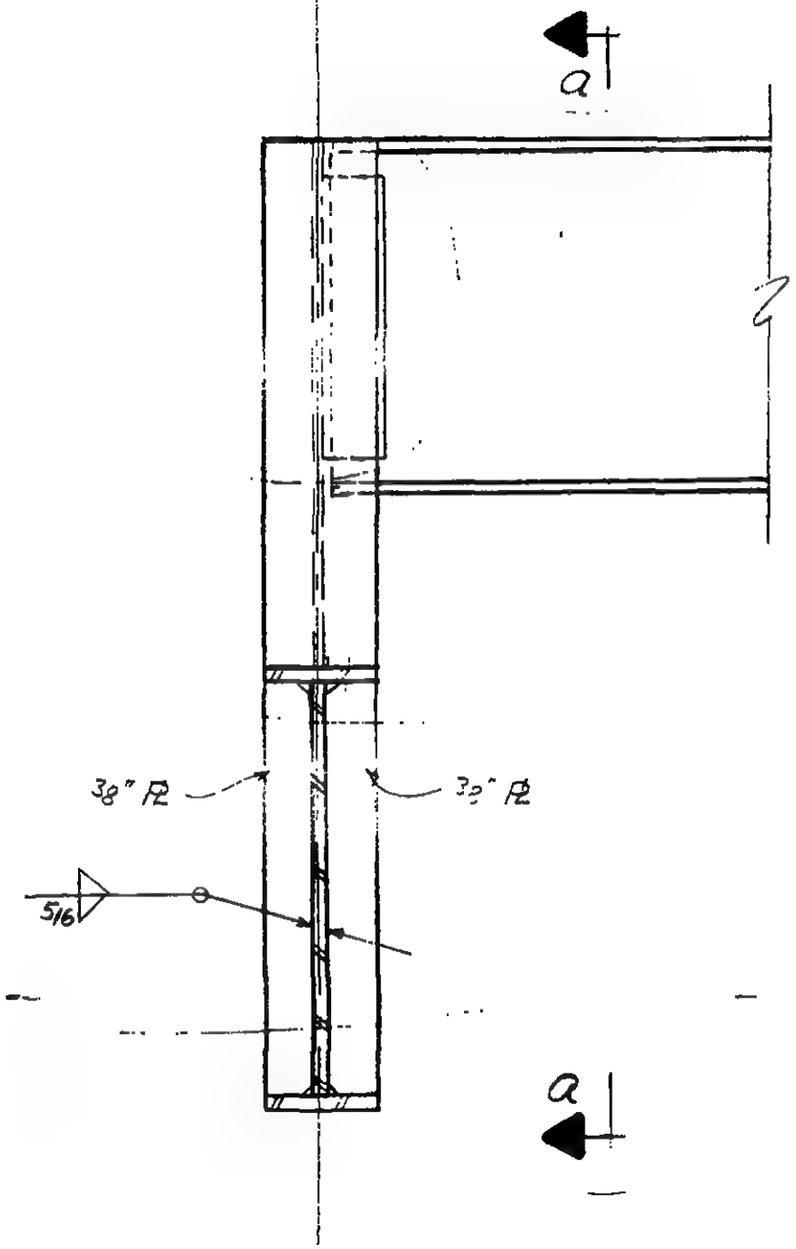

Elevation

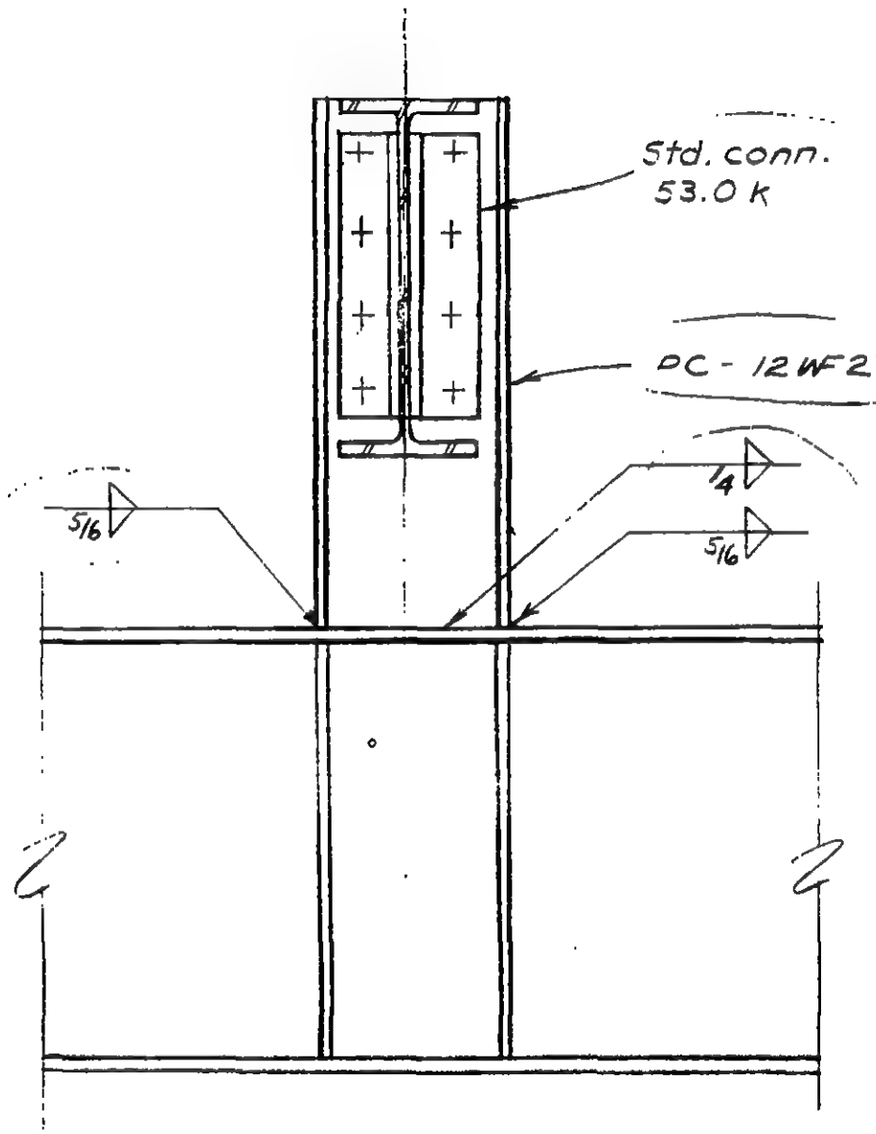

Section a-a

LICENSED PROFESSIONAL ENGINEER
LESLIE E. ROBERTSON
No. 34360
UNIVERSITY OF THE STATE OF NEW YORK

6-AB2-138

WORTHINGTON, SKILLING, HELLE & JACKSON — Civil & Structural Engineers

PROJECT: THE WORLD TRADE CENTER | TITLE: CONNECTION DETAIL 488 | DATE: 7/20/67

REVISIONS

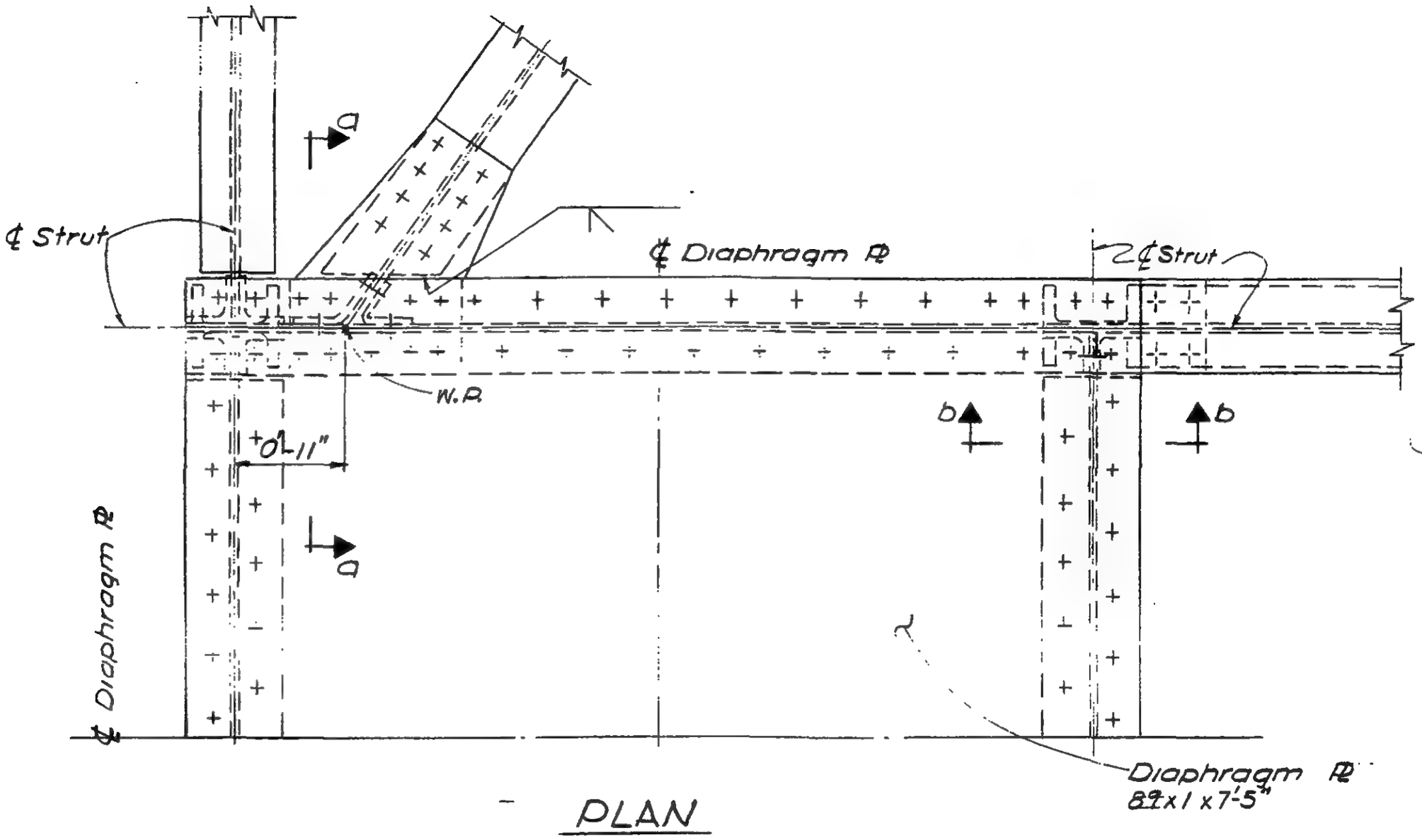

PLAN

Note:
For Sections a-a & b-b
see G-AB2-139.1

LICENSED PROFESSIONAL ENGINEER
LESLIE E. ROBERTSON
No. 34360
UNIVERSITY OF THE STATE OF NEW YORK

G-AB2-139

WORTHINGTON, SKILLING, HELLE & JACKSON — Civil & Structural Engineers

PROJECT: THE WORLD TRADE CENTER | TITLE: CONNECTION DETAIL-SECTIONS a-a & b-b | DATE: 7/20/67

REVISIONS

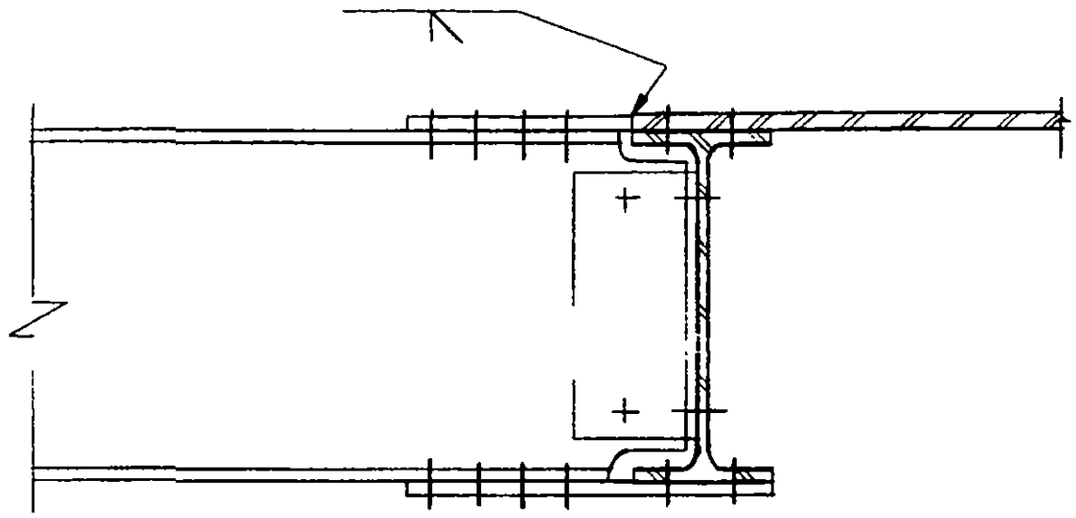

Section a-a

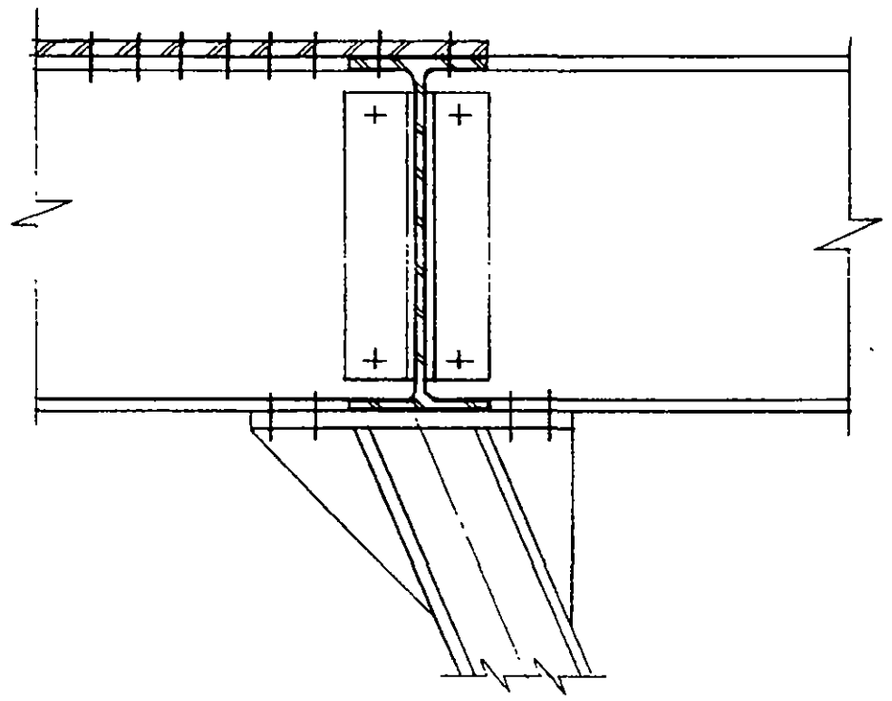

Section b-b

LICENSED PROFESSIONAL ENGINEER — LESLIE E. ROBERTSON — No. 24360 — STATE OF NEW YORK

6-AB2-139.1

WORTHINGTON, SKILLING, HELLE & JACKSON Civil & Structural Engineers

PROJECT WORLD TRADE CENTER | TITLE CONNECTION DETAIL 489 | DATE 7/20/67

REVISIONS

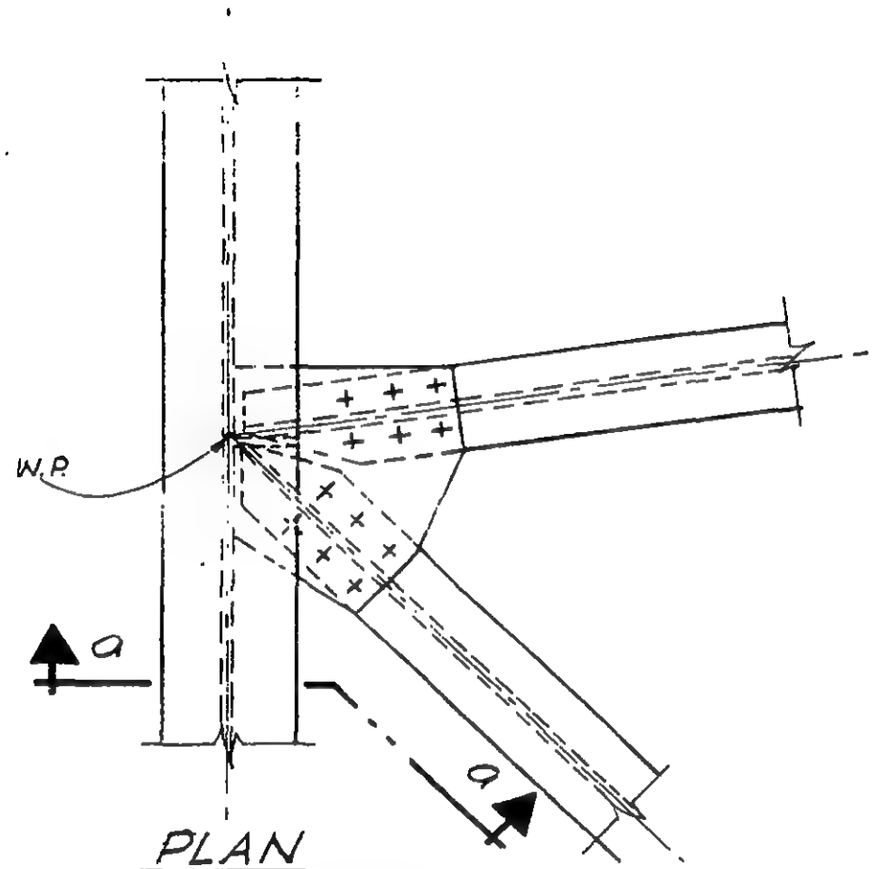

PLAN

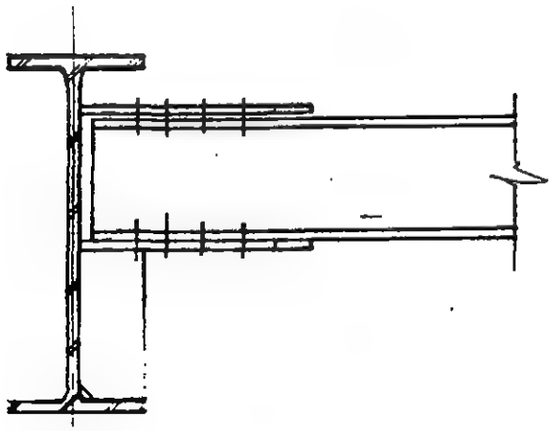

SECTION a-a

LICENSED PROFESSIONAL ENGINEER
LESLIE E. ROBERTSON
No. 34360
REGISTERED IN THE STATE OF NEW YORK

G-A82-140

WORTHINGTON, SKILLING, HELLE & JACKSON — Civil & Structural Engineers

PROJECT: THE WORLD TRADE CENTER | TITLE: CONNECTION DETAIL 491 | DATE: 7/20/67

REVISIONS

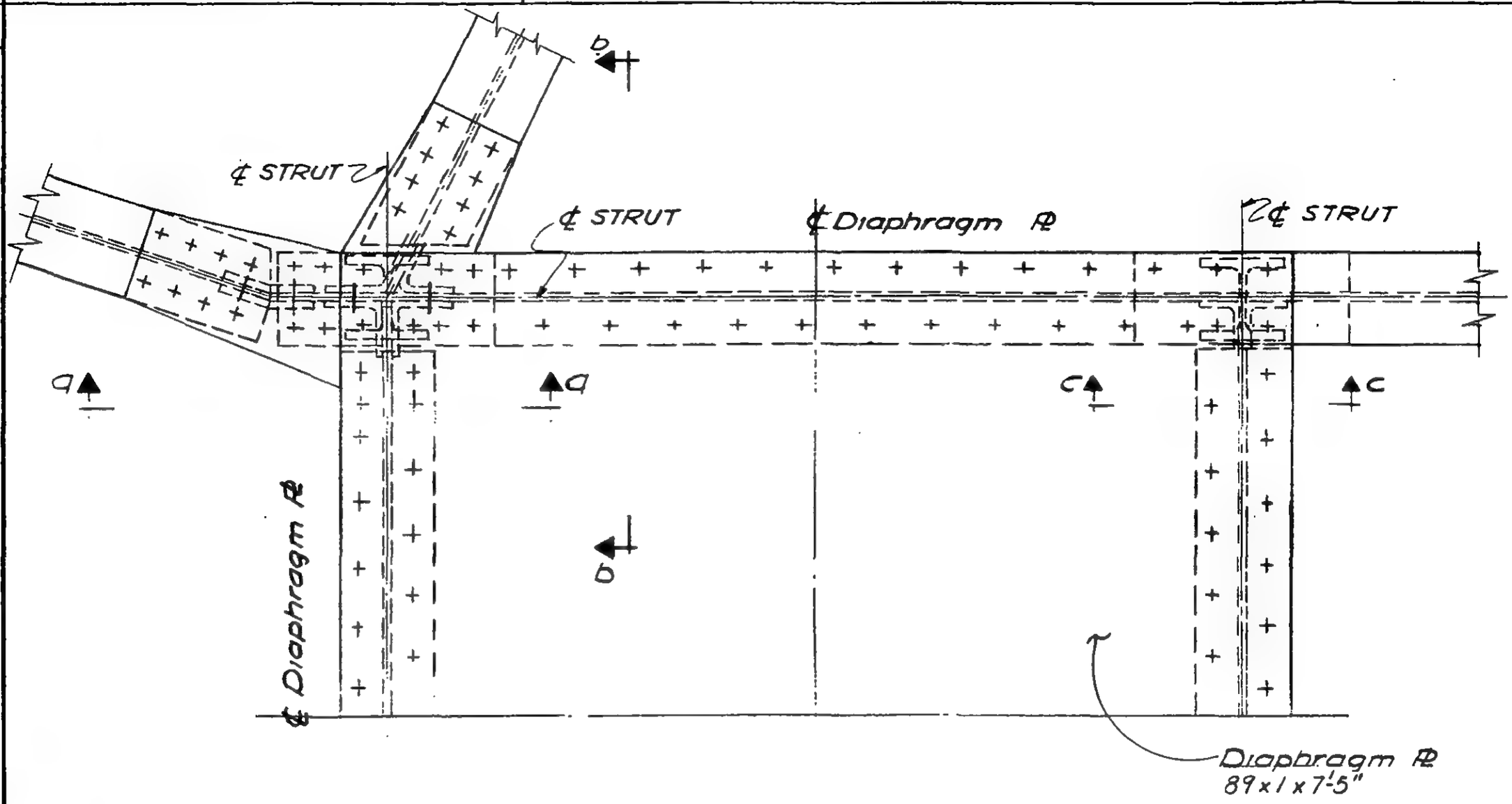

PLAN

Note:
For Sections a-a
b-b & c-c see G-AB2-142.1

LICENSED PROFESSIONAL ENGINEER
LESLIE E. ROBERTSON
NEW YORK

G-AB2-142

WORTHINGTON, SKILLING, HELLE & JACKSON — Civil & Structural Engineers

PROJECT THE WORLD TRADE CENTER | TITLE CONNECTION DETAILS - SECTIONS a-a; b-b; c-c | DATE 7/20/67

REVISIONS

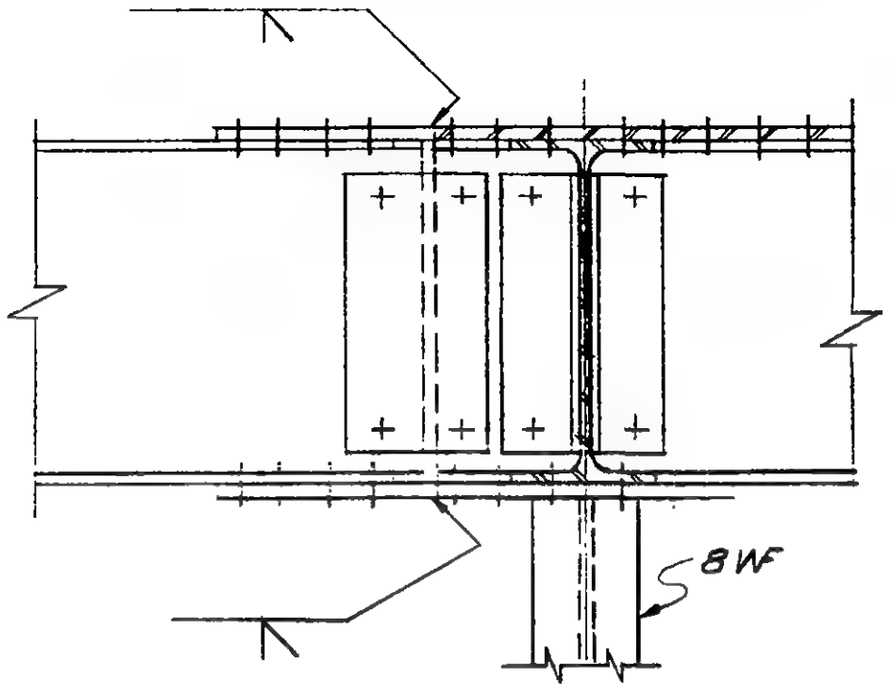

Section a-a

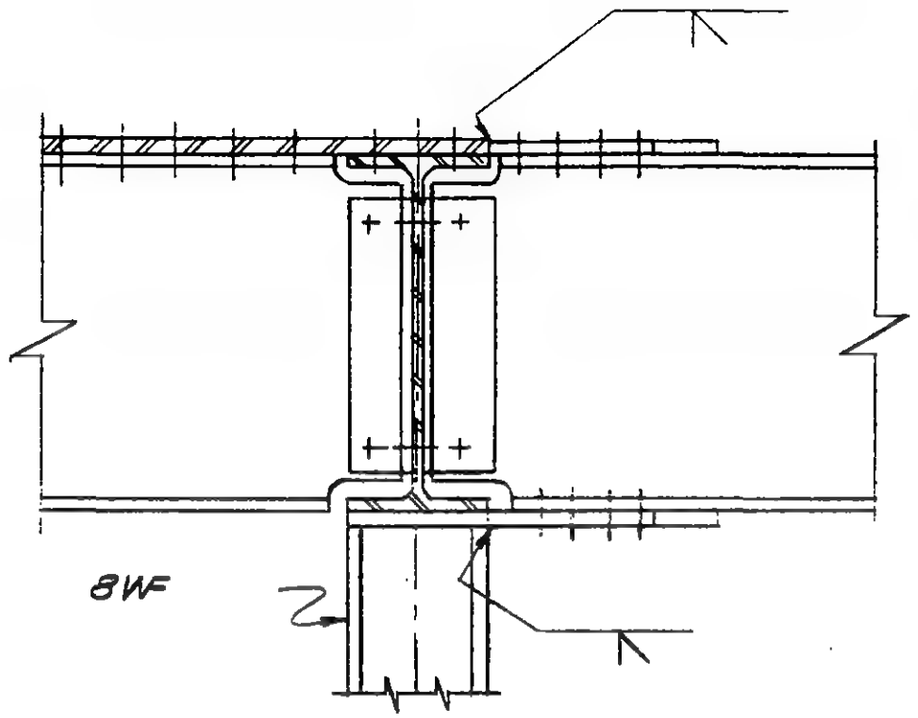

Section b-b

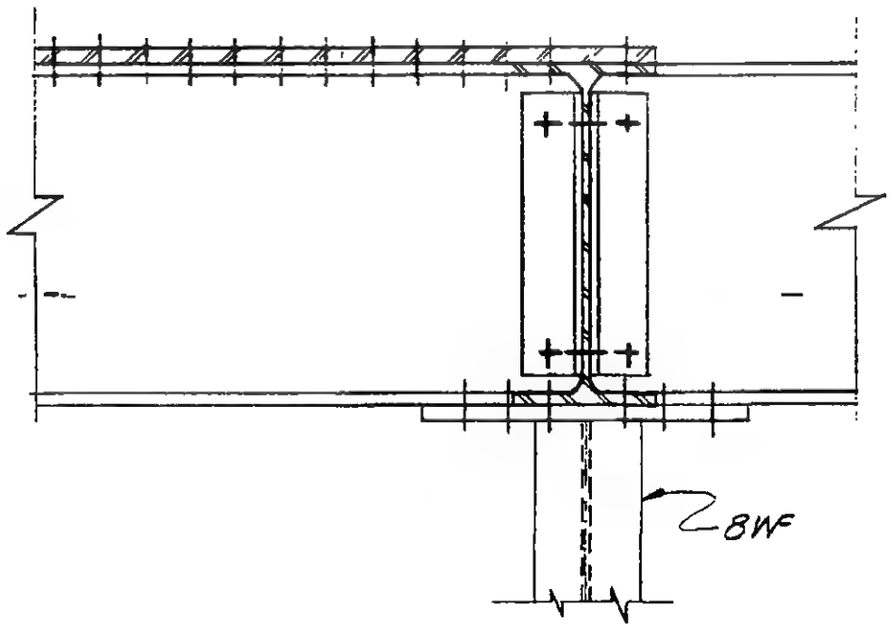

Section c-c

LESLIE E. ROBERTSON — No. 34360 — LICENSED PROFESSIONAL ENGINEER — STATE OF NEW YORK

6-AB2-142.1

WORTHINGTON, SKILLING, HELLE & JACKSON — Civil & Structural Engineers

PROJECT WORLD TRADE CENTER | TITLE CONNECTION DETAIL 492 | DATE 7/20/67

REVISIONS

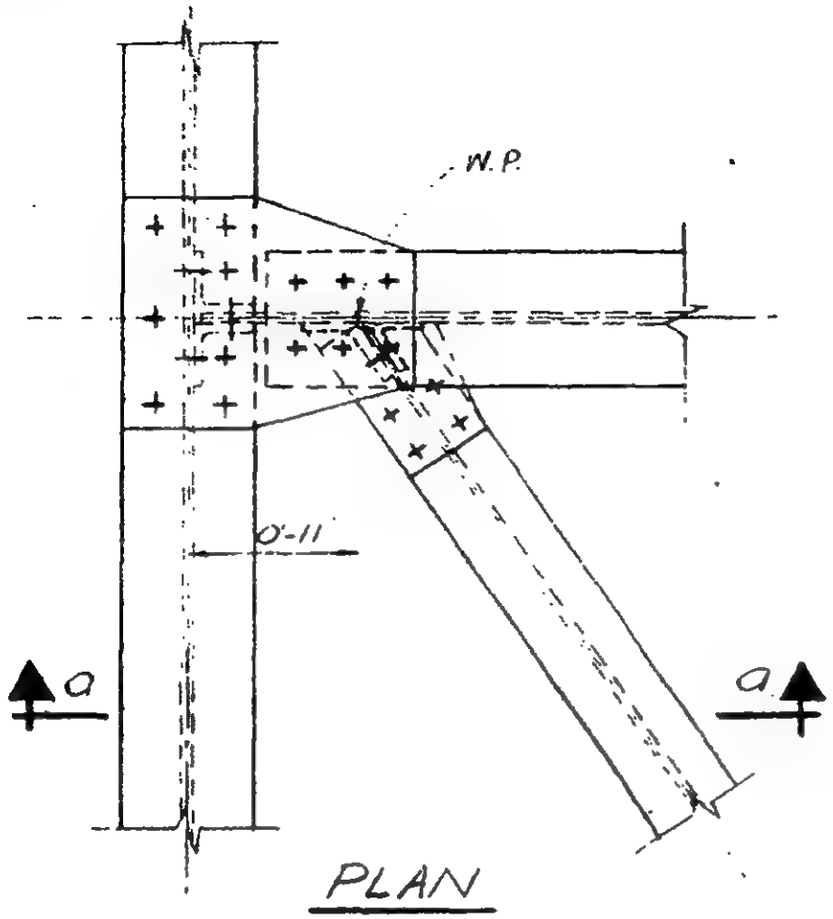

PLAN

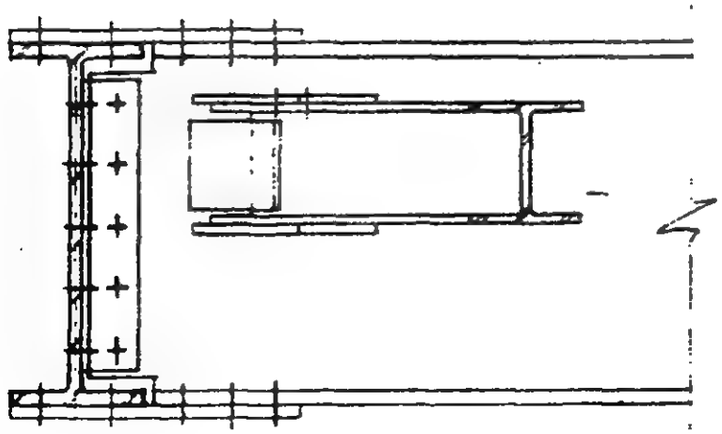

SECTION a-a

SKILLING - HELLE - CHRISTIANSEN - ROBERTSON Structural & Civil Engineers

PROJECT THE WORLD TRADE CENTER | TITLE CONNECTION DETAIL 493 A | DATE 11-10-67

REVISIONS

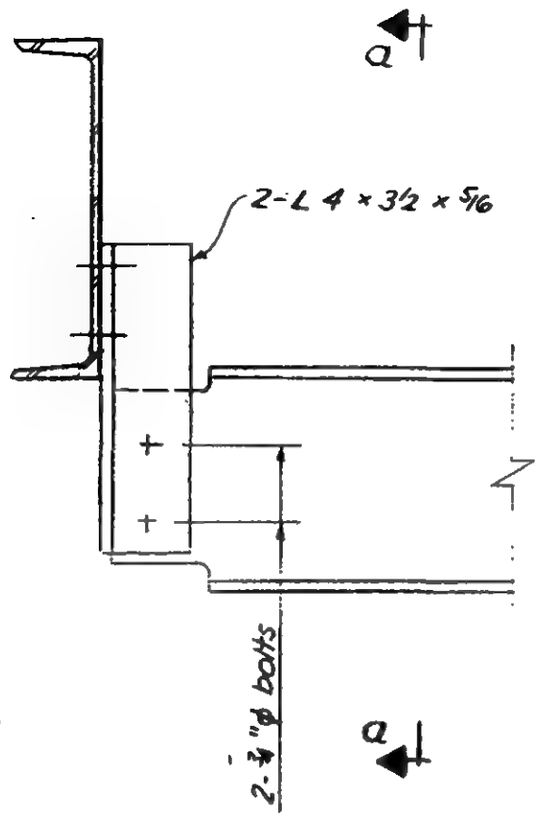

ELEVATION

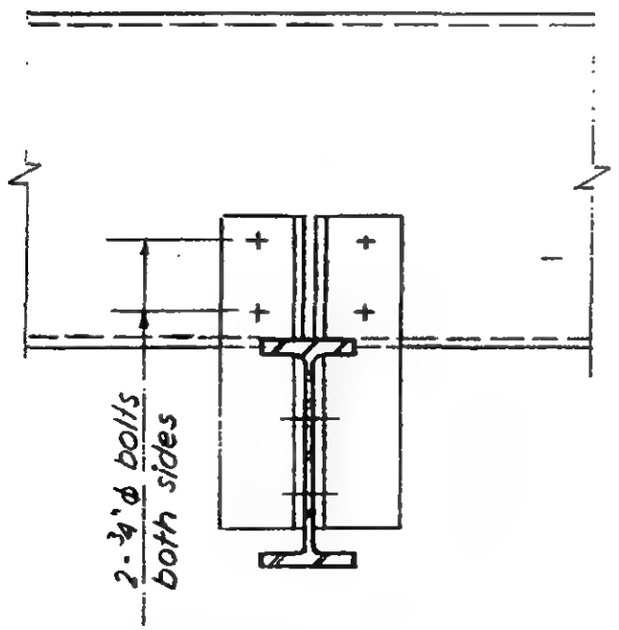

Section a-a

LICENSED PROFESSIONAL ENGINEER
LESLIE E. ROBERTSON
No. 34360
UNIVERSITY OF THE STATE OF NEW YORK

6-AB2-144

SKILLING - HELLE - CHRISTIANSEN - ROBERTSON Structural & Civil Engineers

PROJECT THE WORLD TRADE CENTER | TITLE CONNECTION DETAIL 494A | DATE 9-29-67

REVISIONS

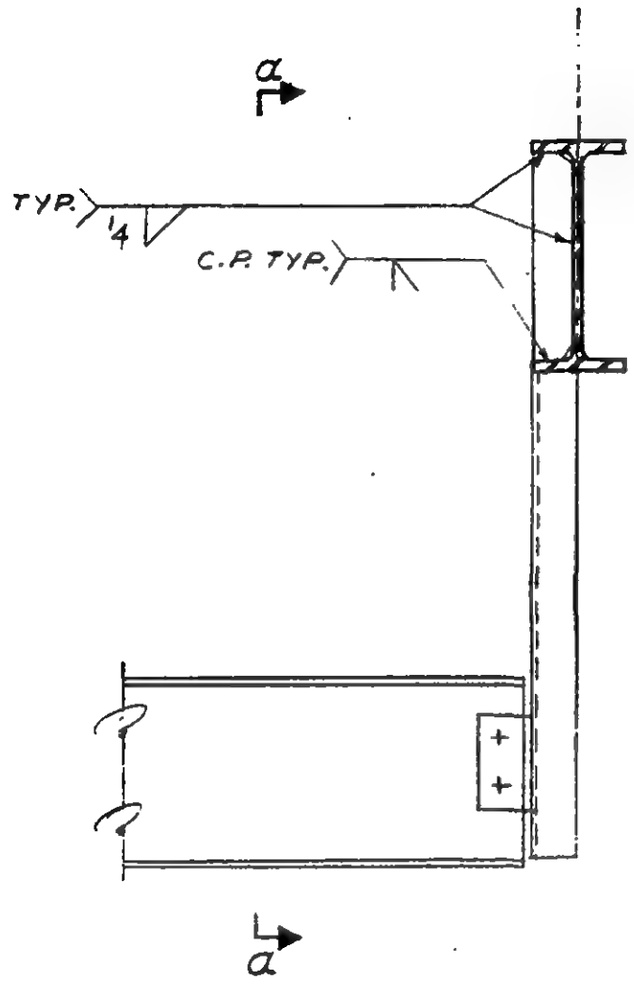

ELEVATION

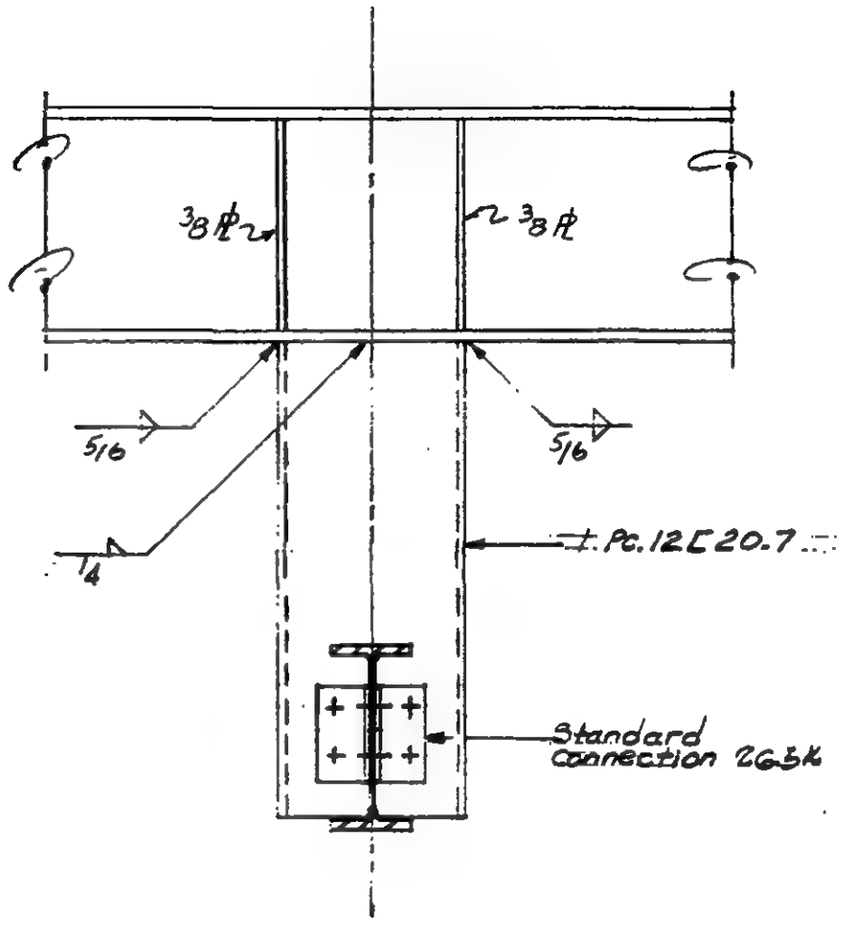

Section a-a

LICENSED PROFESSIONAL ENGINEER
LESLIE E. ROBERTS
No. 34360
UNIVERSITY OF THE STATE OF NEW

6-AB2-145

SKILLING - HELLE - CHRISTIANSEN - ROBERTSON Structural & Civil Engineers

PROJECT THE WORLD TRADE CENTER | TITLE CONNECTION DETAIL 496 | DATE 8-5-67

REVISIONS

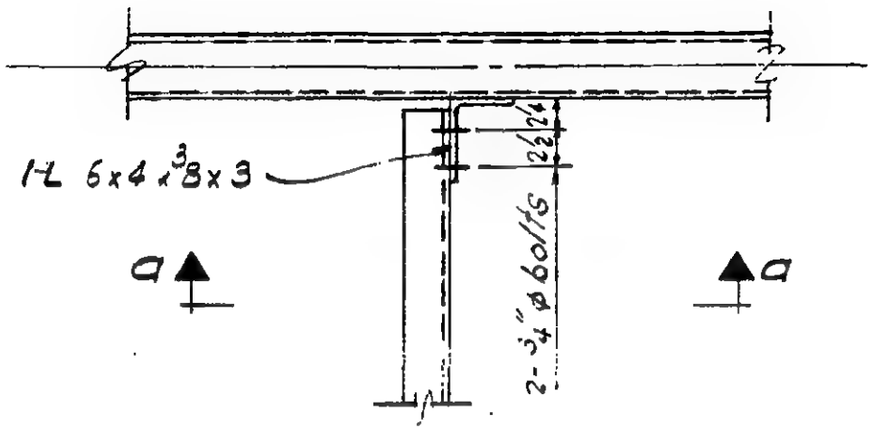

Plan

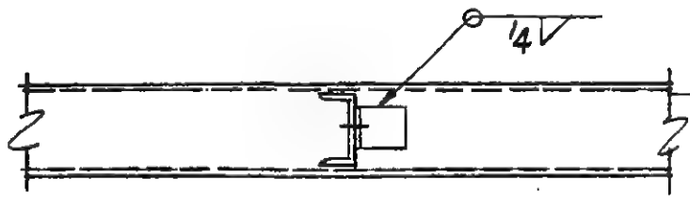

Section a-a

LICENSED PROFESSIONAL ENGINEER
LESLIE E. ROBERTSON
No. 34360
UNIVERSITY OF THE STATE OF NEW YORK

6-AB2-14T

WORTHINGTON, SKILLING, HELLE & JACKSON — Civil & Structural Engineers

PROJECT THE WORLD TRADE CENTER | TITLE CONNECTION DETAIL 497 & 498 | DATE 3-5-67

REVISIONS

DETAIL 497

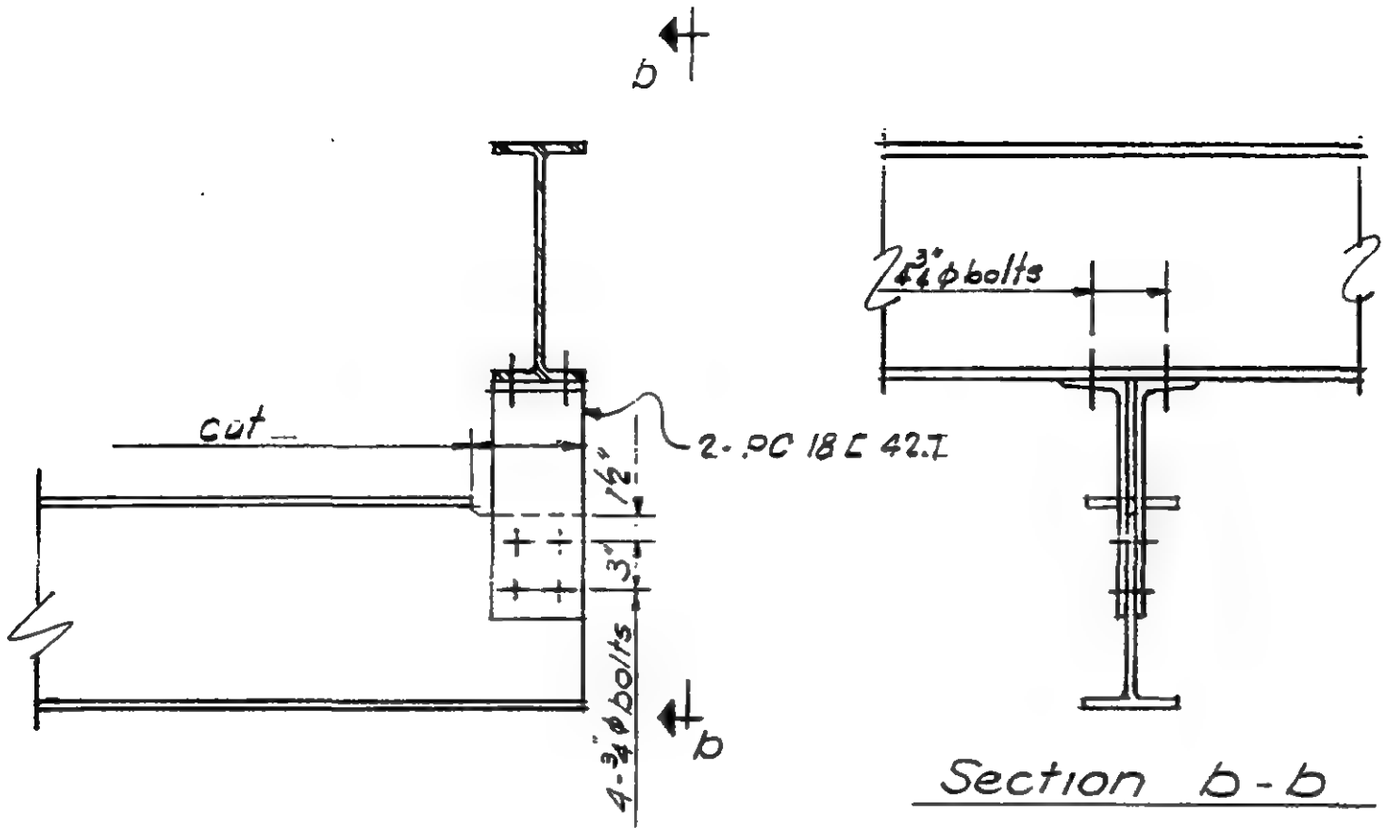

Section b-b

DETAIL 498

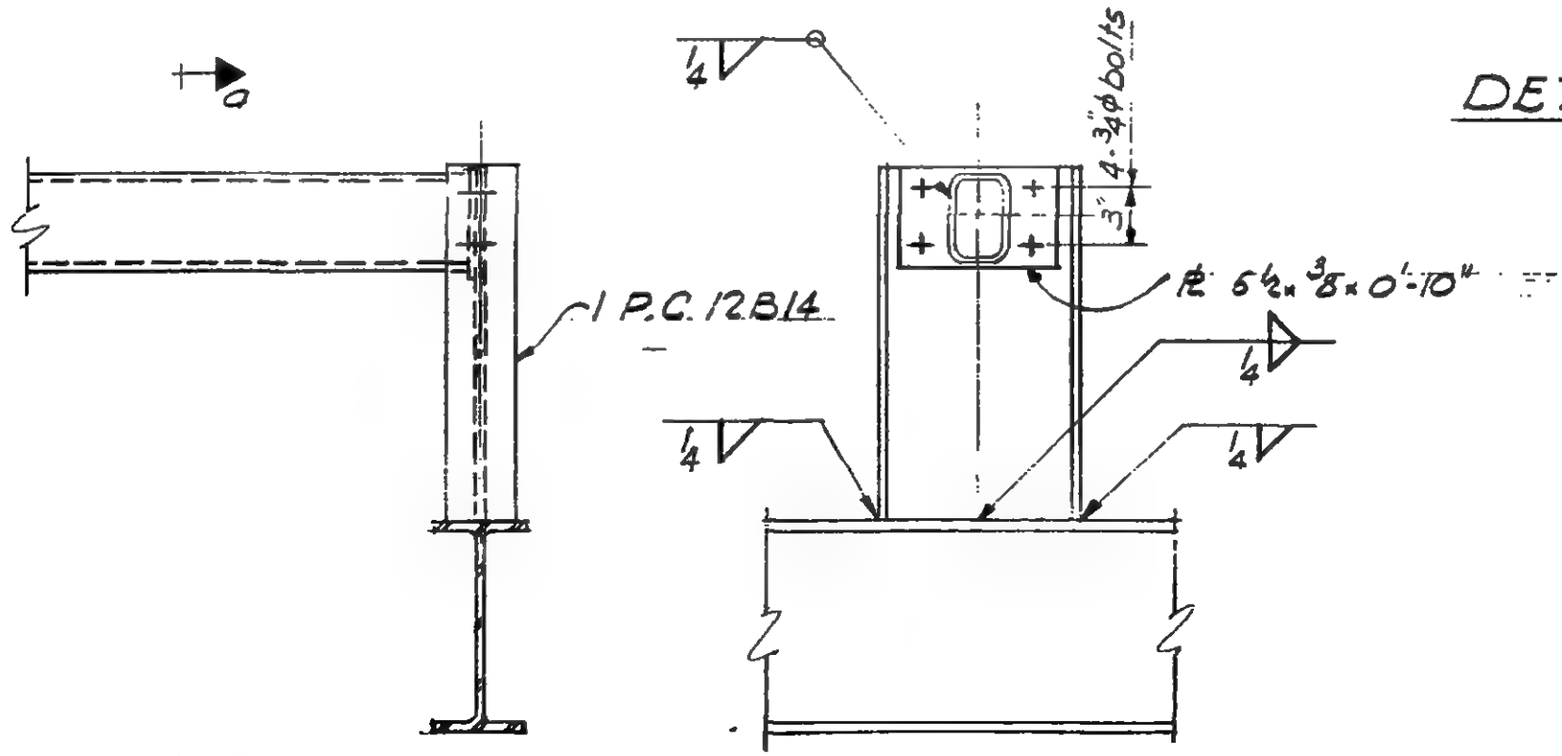

Section a-a

REGISTERED PROFESSIONAL ENGINEER
LESLIE E. ROBERTSON
No. 34360
CITY OF THE STATE OF NEW YORK

6-AB2-148

WORTHINGTON, SKILLING, HELLE & JACKSON — Civil & Structural Engineers

PROJECT THE WORLD TRADE CENTER | TITLE CONNECTION DETAIL 499 | DATE 3-5-67

REVISIONS

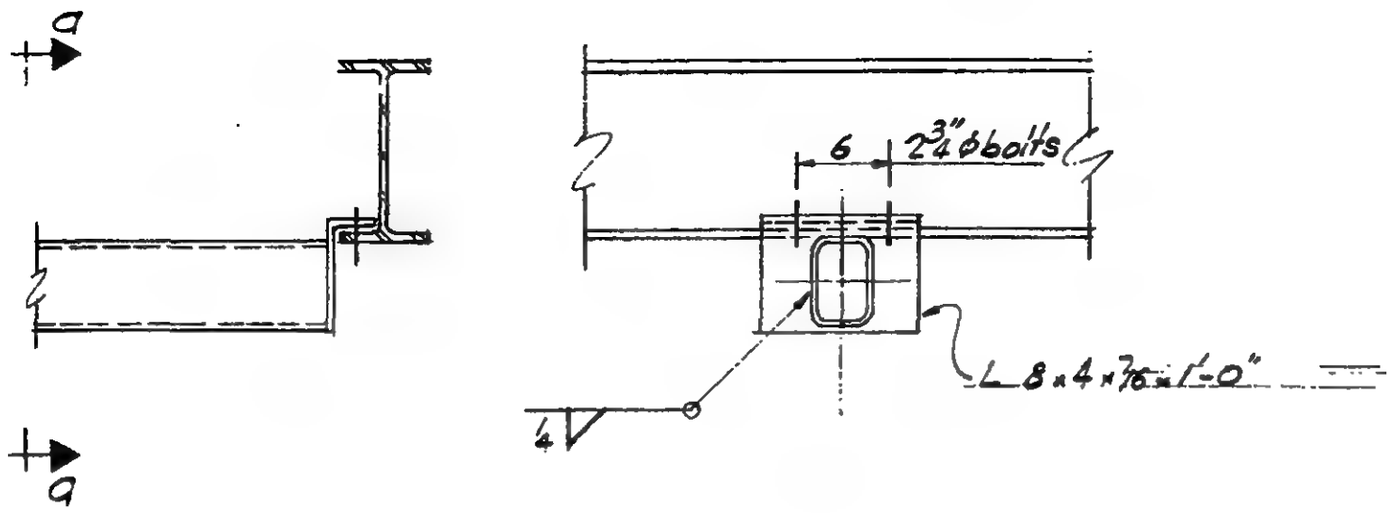

Section a-a

LICENSED PROFESSIONAL ENGINEER
LESLIE E. ROBERTSON
No. 34360
UNIVERSITY OF THE STATE OF NEW YORK

6-AB2-150

SKILLING - HELLE - CHRISTIANSEN - ROBERTSON Structural & Civil Engineers

PROJECT THE WORLD TRADE CENTER | TITLE CONNECTION DETAIL 500 A | DATE 10-5-67

REVISIONS

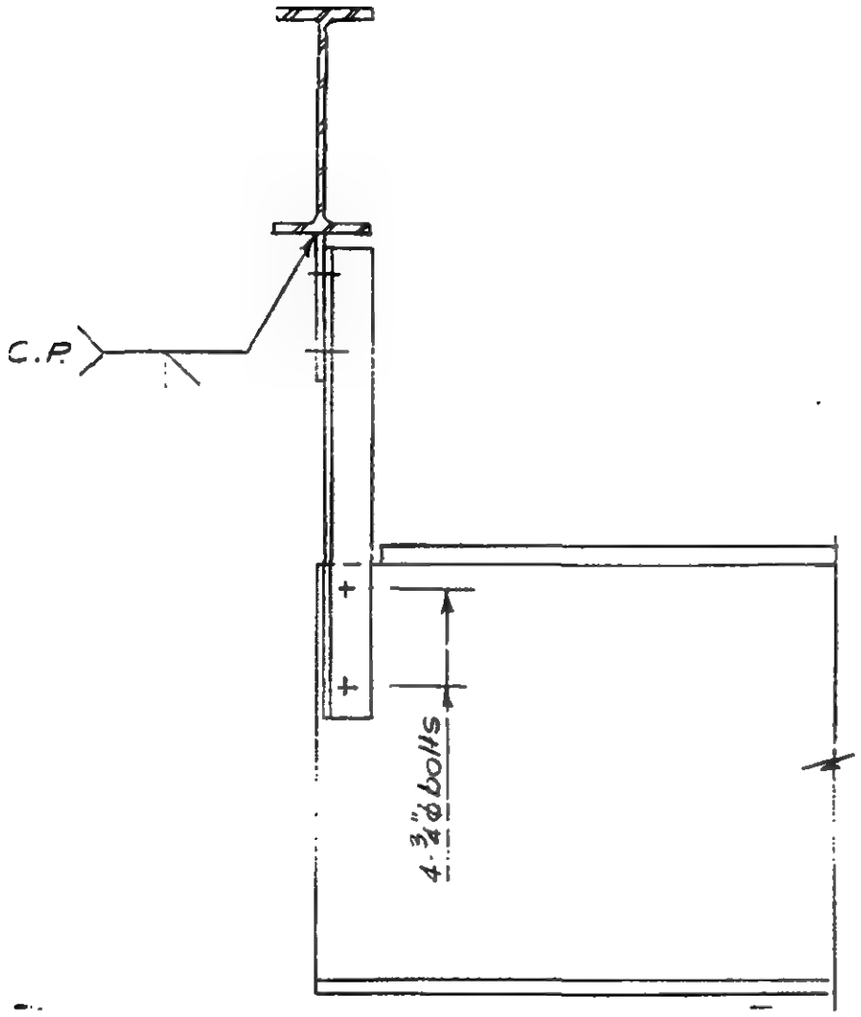

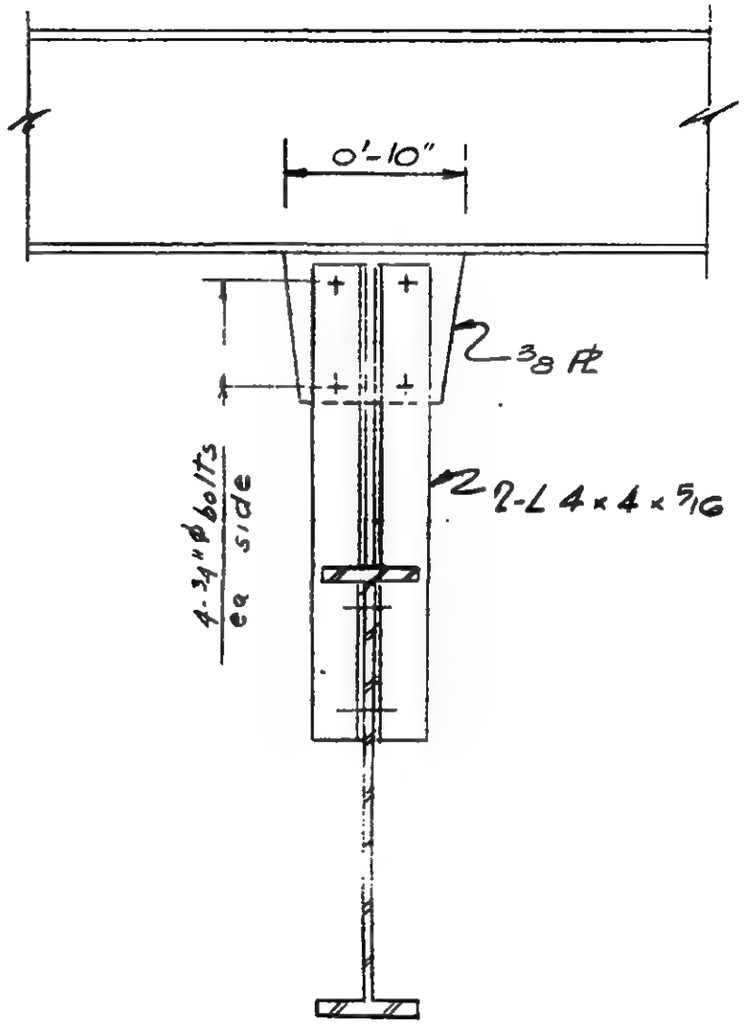

LICENSED PROFESSIONAL ENGINEER
LESLIE E. ROBERTSON
No. 34360
UNIVERSITY OF THE STATE OF NEW YORK

G-AB2-151

WORTHINGTON, SKILLING, HELLE & JACKSON — Civil & Structural Engineers

PROJECT THE WORLD TRADE CENTER | TITLE CONNECTION DETAILS 501A & 502A | DATE 5-9-67

REVISIONS

5-67

10-2-67

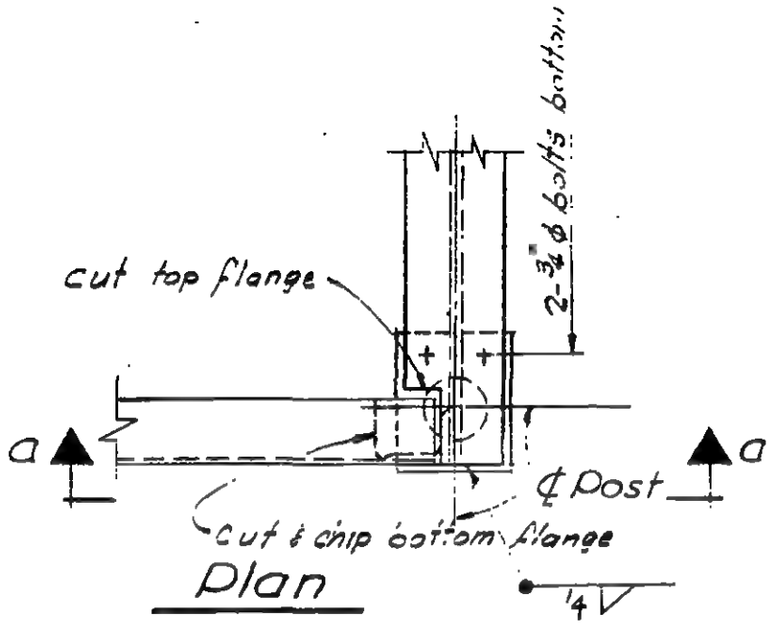

Plan

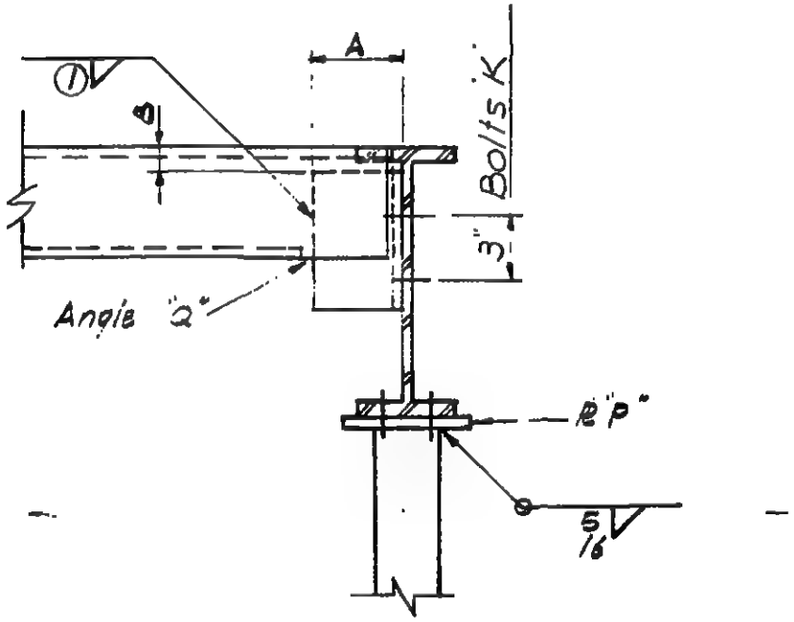

Section a-a

DETAIL 501A

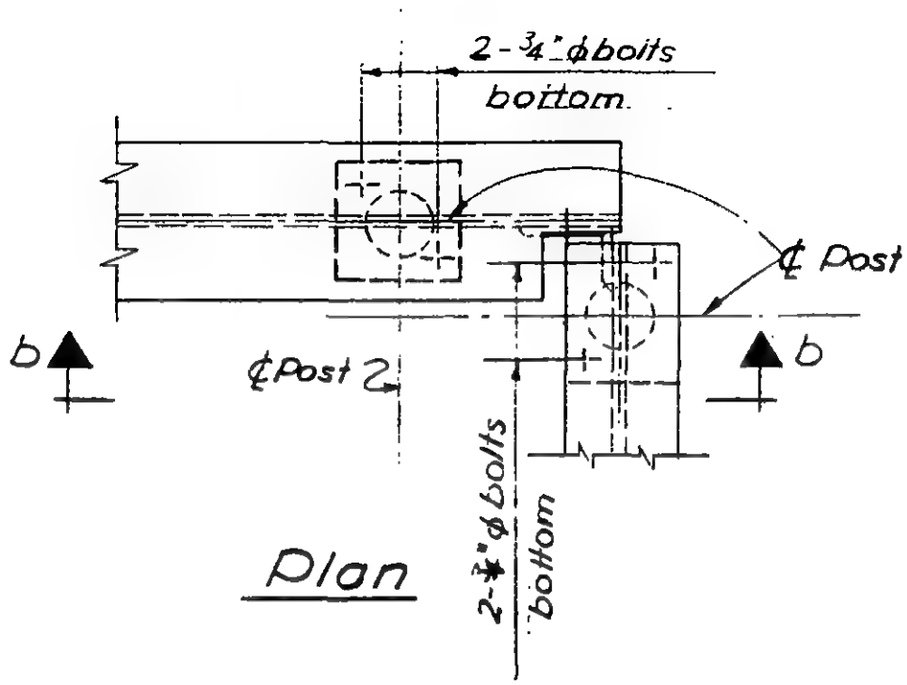

Plan

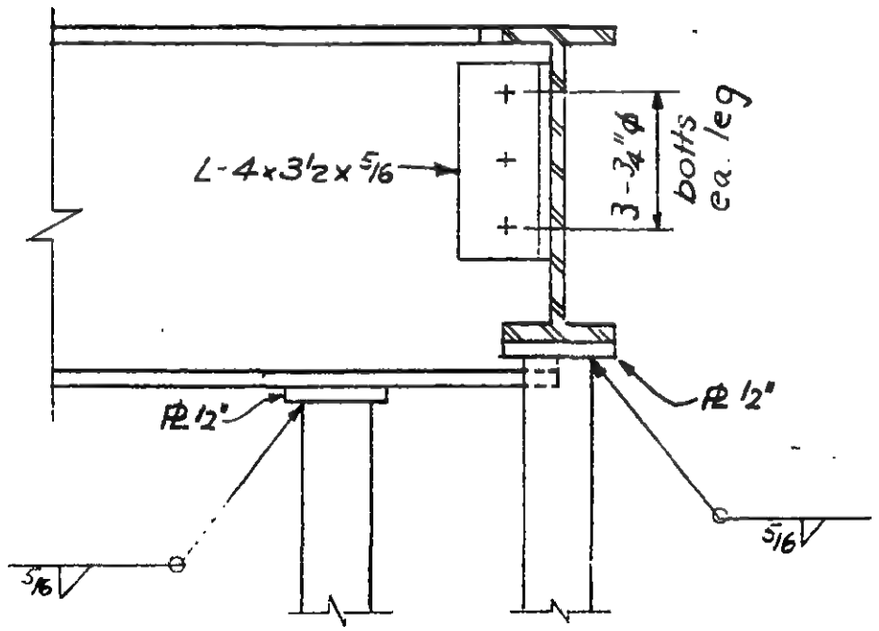

Section b-b

DETAIL 502A

G-AB2-152

PROFESSIONAL ENGINEER
LESLIE E. ROBERTSON
No. 34360
UNIVERSITY OF THE STATE OF NEW YORK

WORTHINGTON, SKILLING, HELLE & JACKSON — Civil & Structural Engineers

PROJECT THE WORLD TRADE CENTER | TITLE SCHEDULE FOR DETAIL 501A | DATE 8-5-67

REVISIONS

	501 A					
Plate P	1/2					
Angle Q	3 1/2 × 3 × 3/8					
Dimension A	0'-3"					
B	3/4"					
Bolts K	2-3/4" ϕ					
Weld ①	5/16					

6-AB2-152.1

WORTHINGTON, SKILLING, HELLE & JACKSON — Civil & Structural Engineers

PROJECT THE WORLD TRADE CENTER | TITLE CONNECTION DETAILS. 503 A,B, & 504 A | DATE 5-9-67

REVISIONS

- 5-67
- 8-14-67

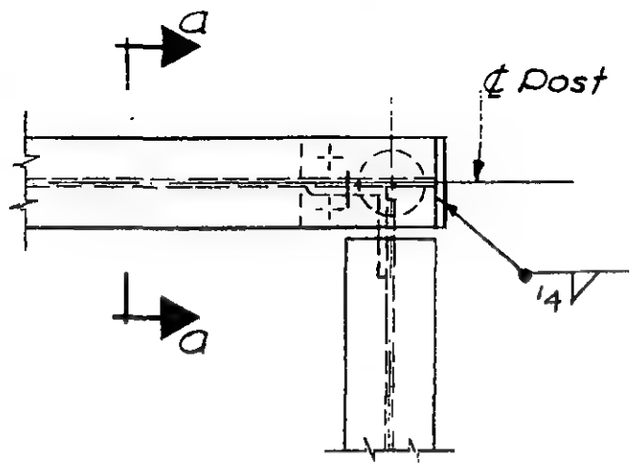

Plan

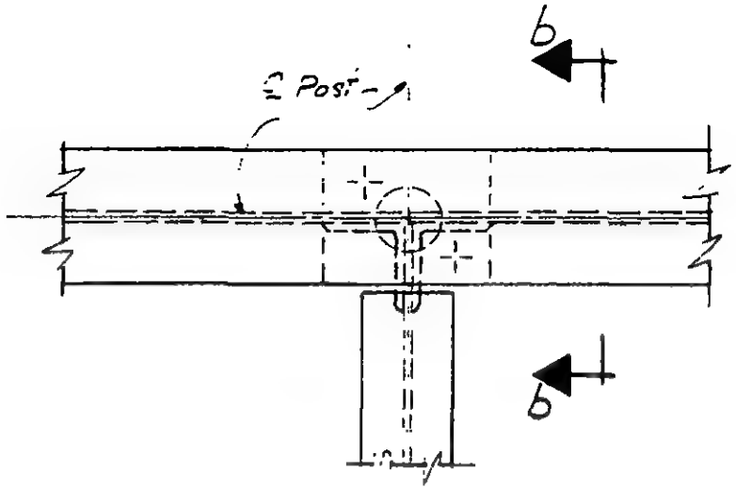

Plan

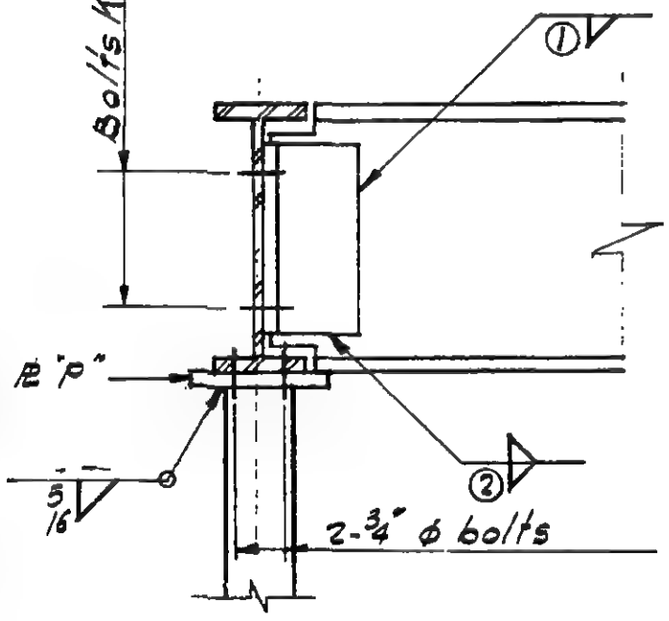

Section a-a

Deeper of two beams sits on post. If two beams of same depth see beam schedule

DETAIL 503 A,B

std. conn. 18.0K

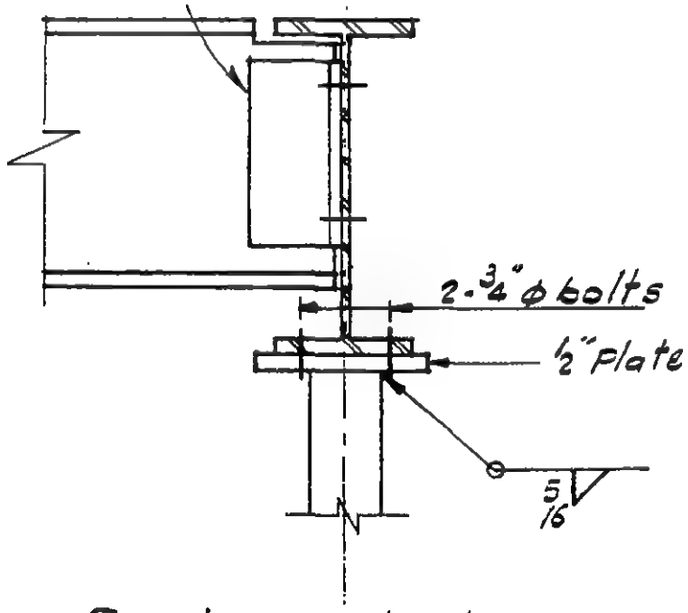

Section b-b

DETAIL 504 A

6-AB2-153

LICENSED PROFESSIONAL ENGINEER
LESLIE E. ROBERTSON
No. 34360
UNIVERSITY OF THE STATE OF NEW YORK

SKILLING - HELLE - CHRISTIANSEN - ROBERTSON Structural & Civil Engineers

PROJECT THE WORLD TRADE CENTER | TITLE SCHEDULE FOR DETAIL 503 A,B | DATE 8-5-67

REVISIONS

-14-67

REF. DWG.	6-AB2-153	6-AB2-153
	503 A	503 B
PLATES		
P	1/2"	5/8"
ANGLE		
Q	4x4x7/16	4x4x7/16
BOLTS		
K	3-1 Φ	2-7/8" Φ
WELD		
①	3/8"	3/8"
②	3/8"	3/8"

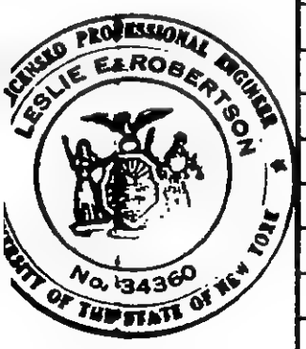

WORTHINGTON, SKILLING, HELLE & JACKSON — Civil & Structural Engineers

PROJECT: THE WORLD TRADE CENTER | TITLE: CONNECTION DETAILS 505 A,B & 506 A,B | DATE: 5-9-67

REVISIONS

1-19-67
8-14-67
10-2-67

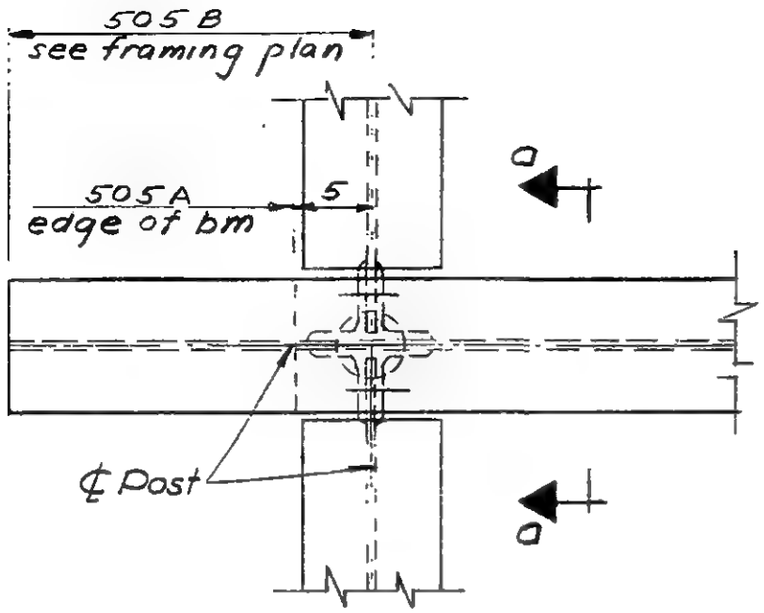

PLAN

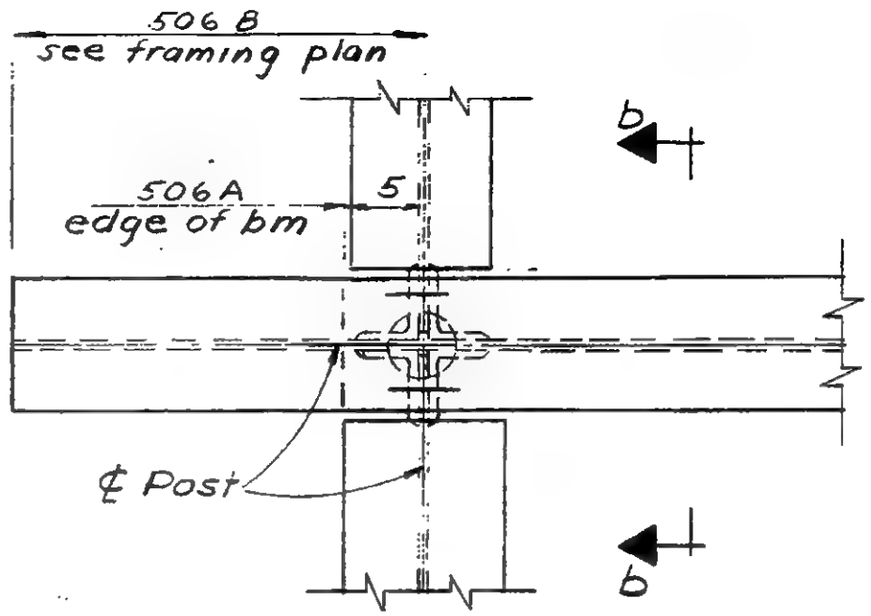

Plan

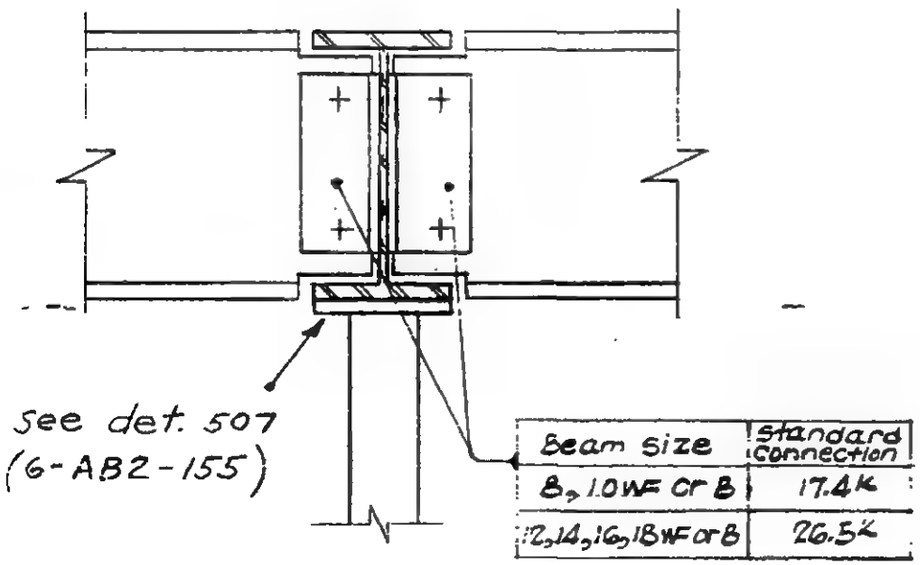

Beam size	Standard Connection
8, 10 WF or B	17.4K
12, 14, 16, 18 WF or B	26.5K

SECTION a-a

DETAIL 505

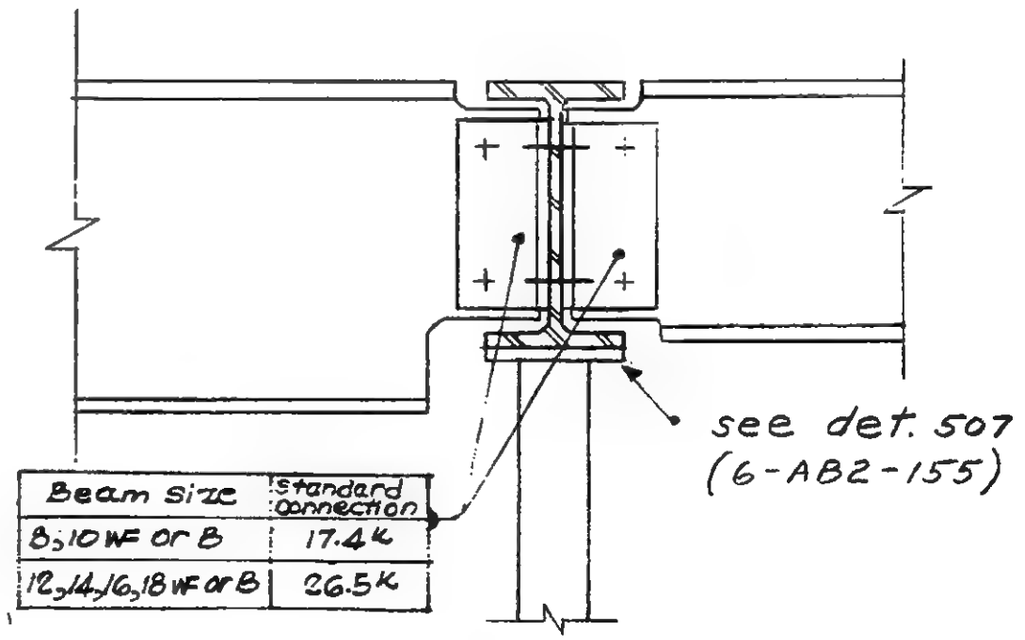

Beam size	Standard Connection
8, 10 WF or B	17.4K
12, 14, 16, 18 WF or B	26.5K

SECTION b-b

DETAIL 506

LICENSED PROFESSIONAL ENGINEER
LESLIE E. ROBERTSON
No. 34360
STATE OF NEW YORK

6-AB2-154

WORTHINGTON, SKILLING, HELLE & JACKSON — Civil & Structural Engineers

PROJECT THE WORLD TRADE CENTER | TITLE CONNECTION DETAIL 507 | DATE 8-5-67

REVISIONS

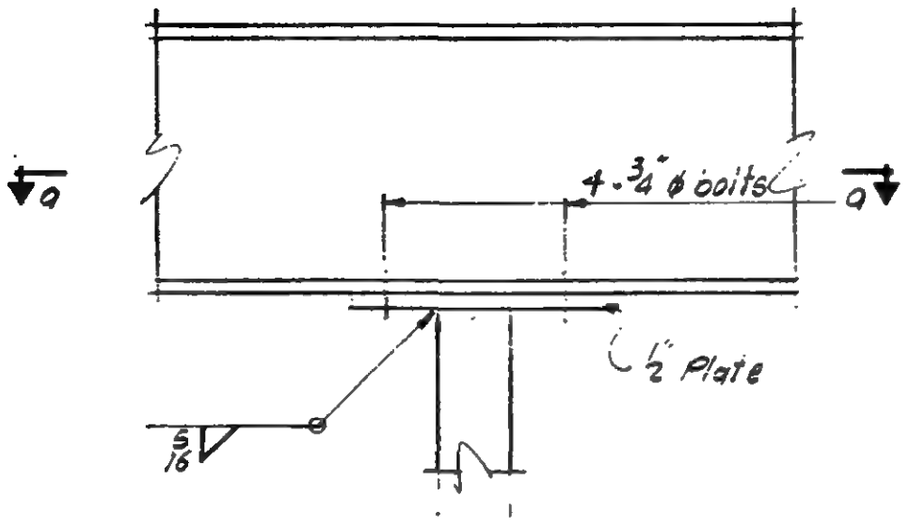

Elevation

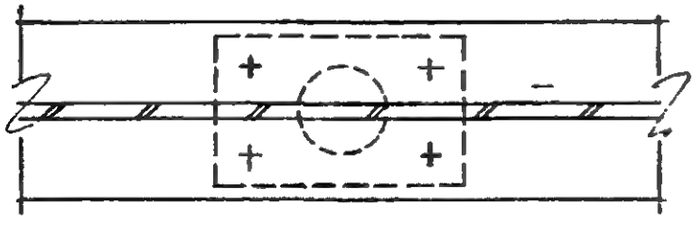

Section a-a

LICENSED PROFESSIONAL ENGINEER
LESLIE E. ROBERTSON
No. 34360
UNIVERSITY OF THE STATE OF NEW YORK

6-AB2-155

WORTHINGTON, SKILLING, HELLE & JACKSON — Civil & Structural Engineers

PROJECT	TITLE	DATE
THE WORLD TRADE CENTER	CONNECTION DETAILS 508 & 512	6-5-67

REVISIONS

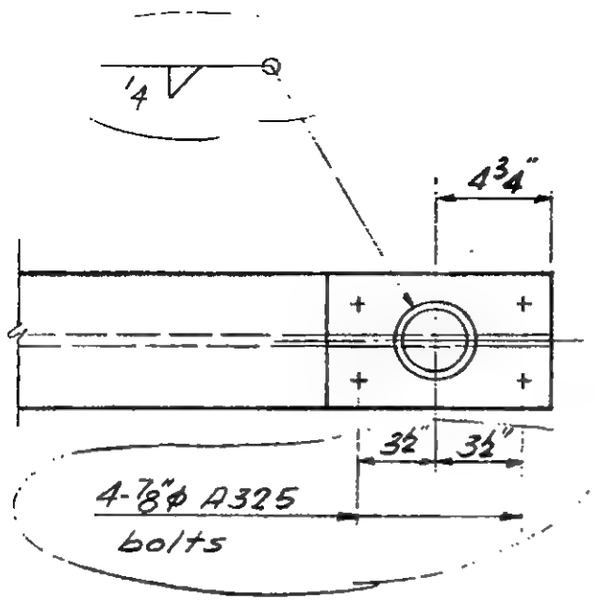

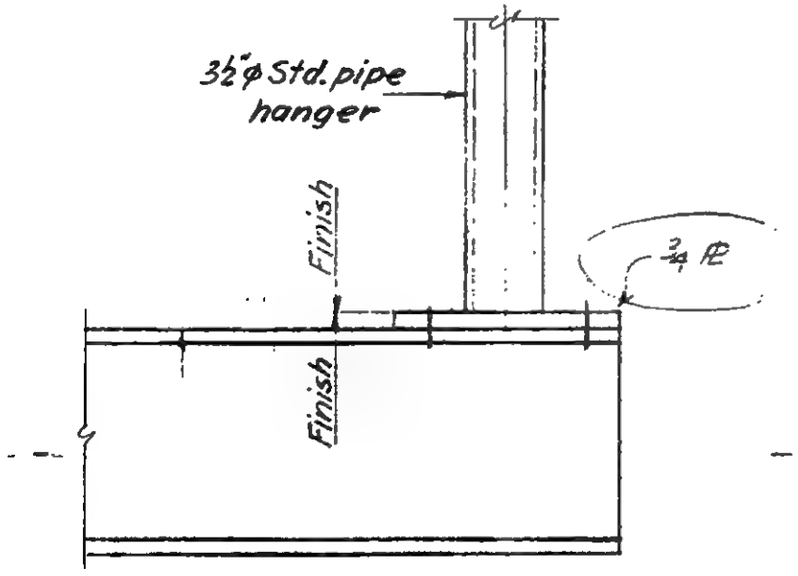

Detail 508

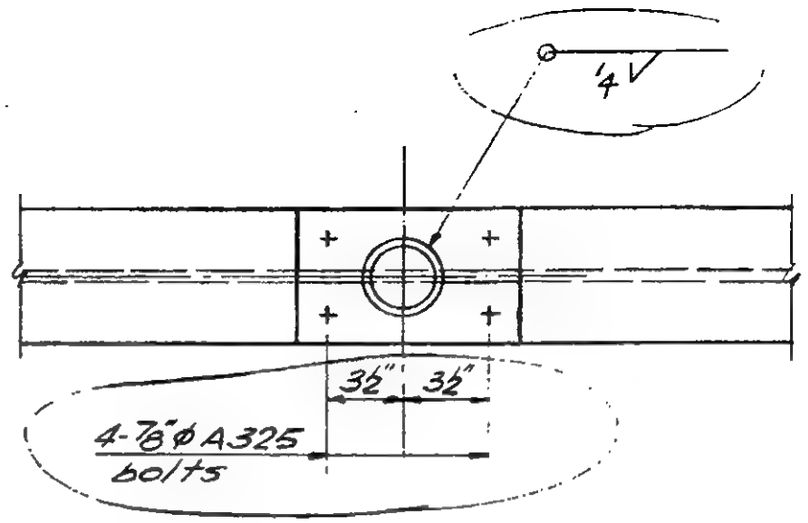

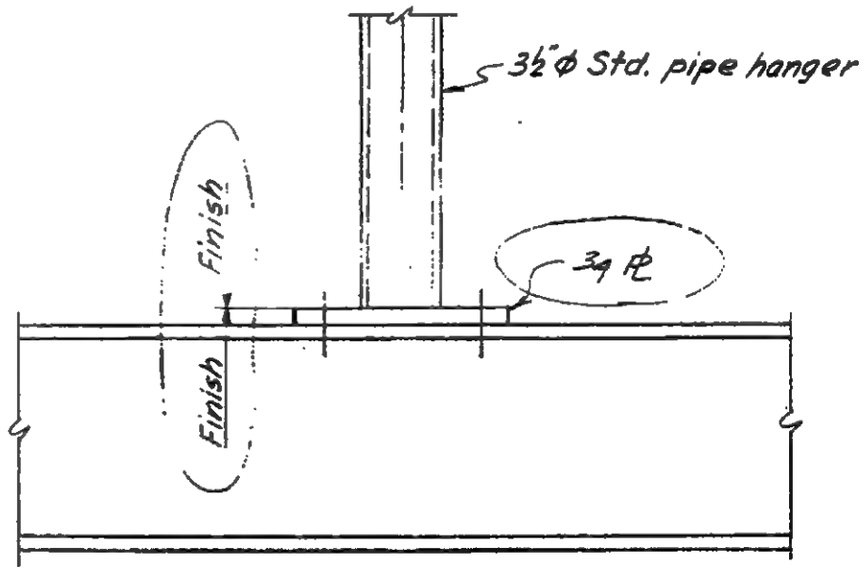

Detail 512

LICENSED PROFESSIONAL ENGINEER
LESLIE E. ROBERTSON
No. 34360
UNIVERSITY OF THE STATE OF NEW YORK

G-AB2-156

WORTHINGTON, SKILLING, HELLE & JACKSON — Civil & Structural Engineers

PROJECT: THE WORLD TRADE CENTER | TITLE: CONNECTION DETAILS 508 & 512 | DATE: 6-5-67

REVISIONS
·17-67

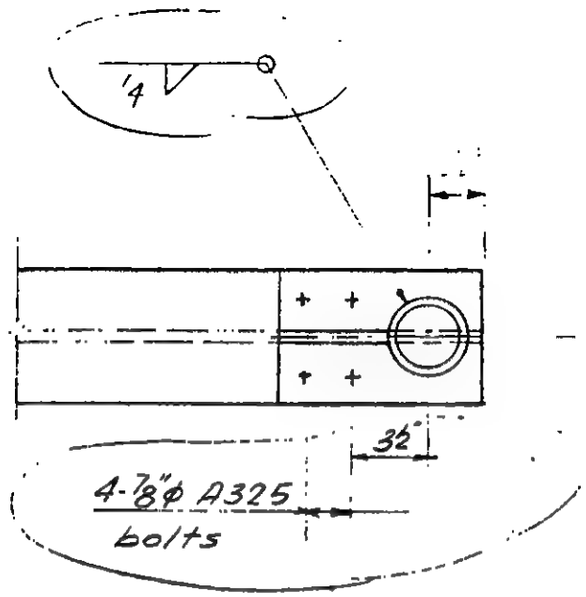

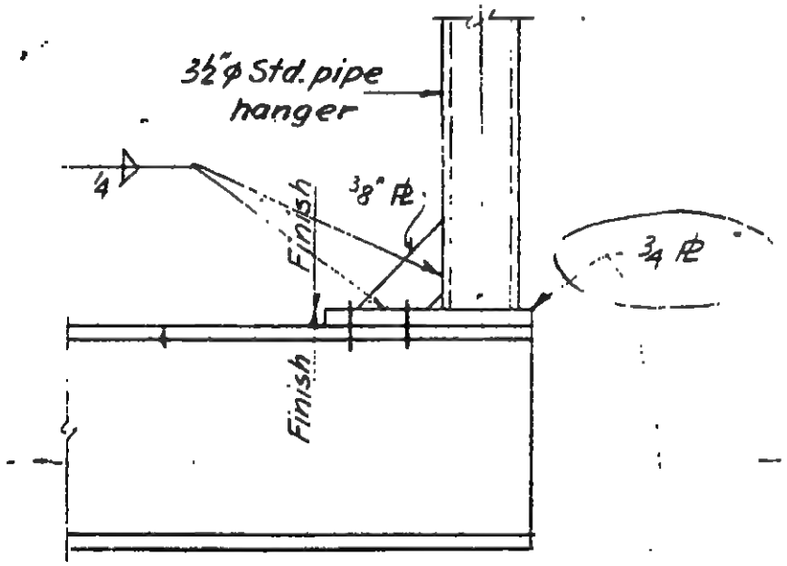

Detail 508

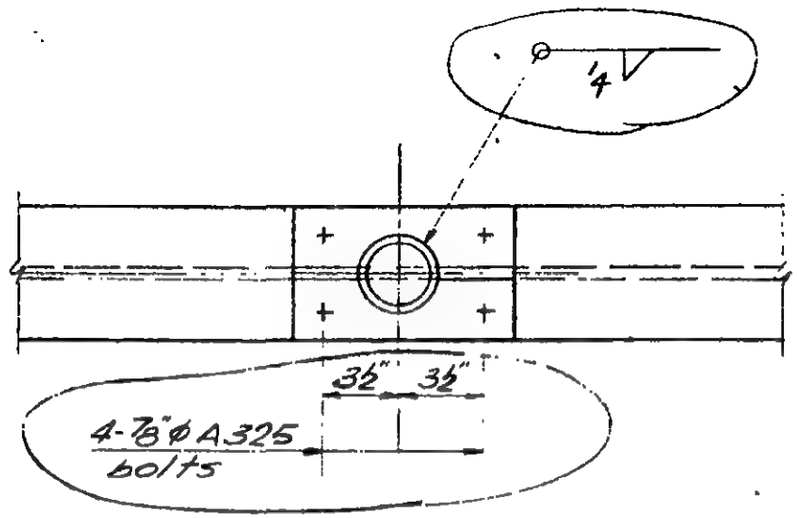

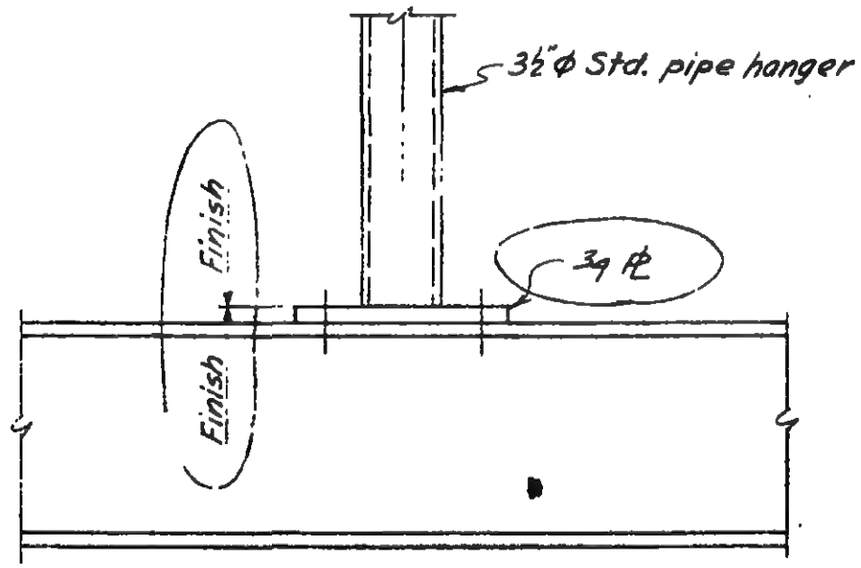

Detail 512

LICENSED PROFESSIONAL ENGINEER
LESLIE E. ROBERTSON
No. 34360
UNIVERSITY OF THE STATE OF NEW YORK

6-AB2-156 ALT.

WORTHINGTON, SKILLING, HELLE & JACKSON — Civil & Structural Engineers

PROJECT: THE WORLD TRADE CENTER | TITLE: CONNECTION DETAIL 509 A, B, C, D, E | DATE: 6-5-67

REVISIONS
8-14-67
10-2-67
1-24-68
2-9-68

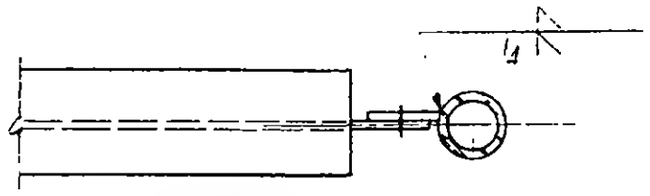

Section a-a (typ.)

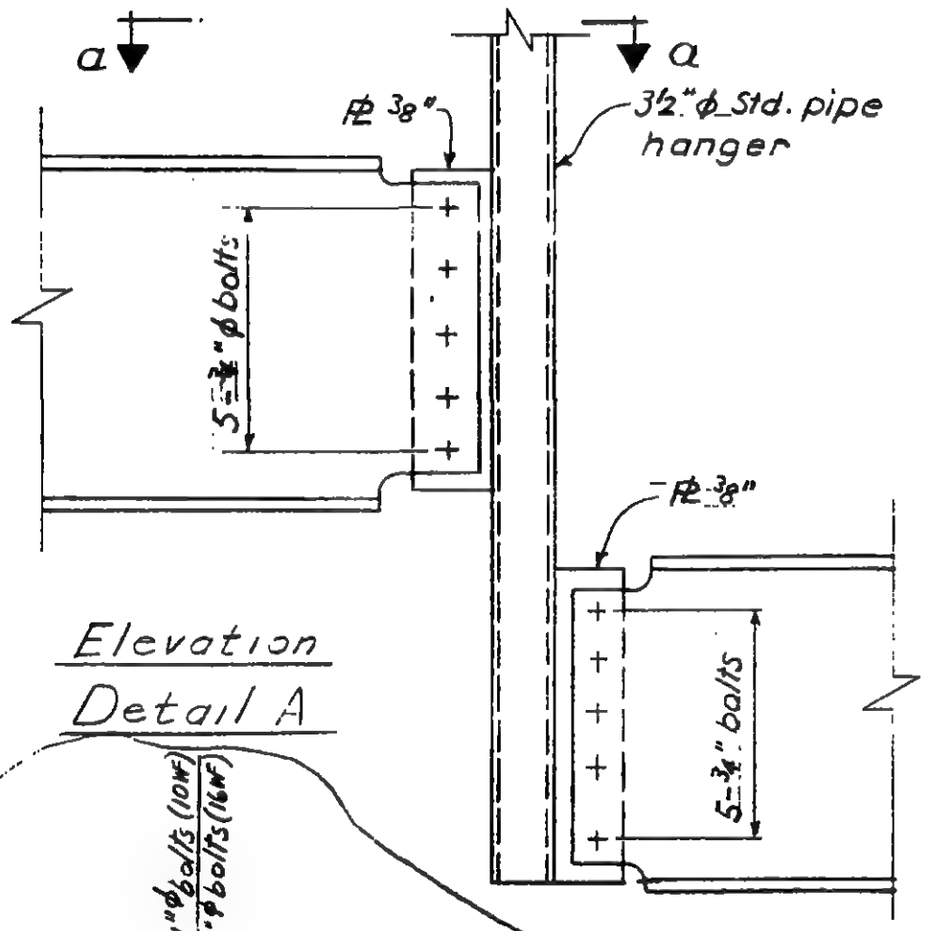

Elevation Detail A

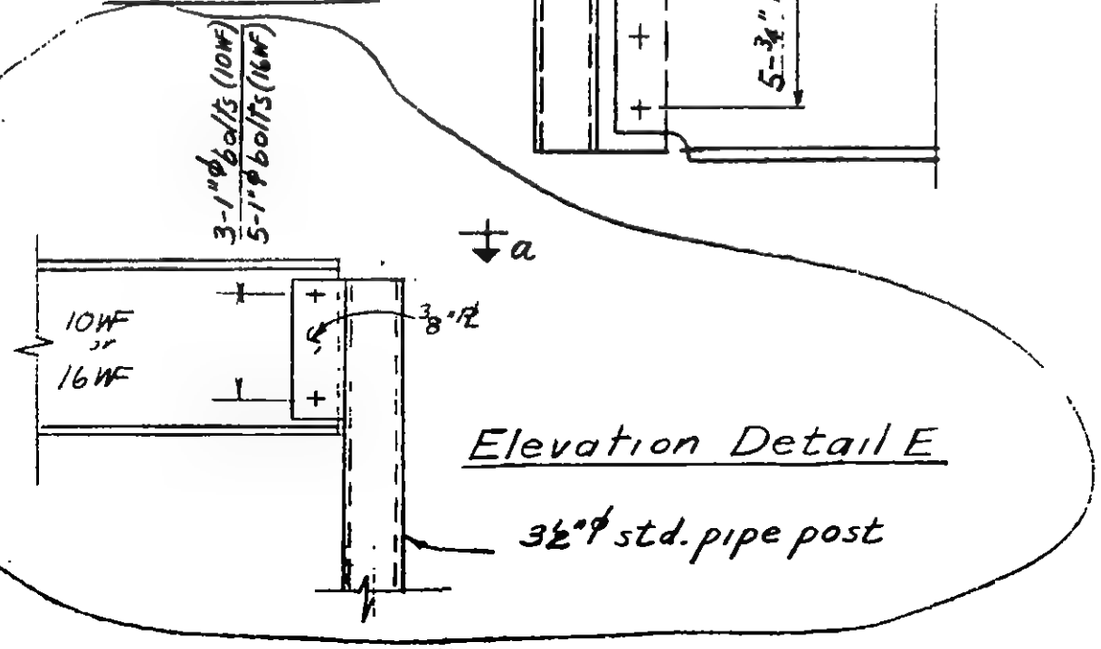

Elevation Detail E

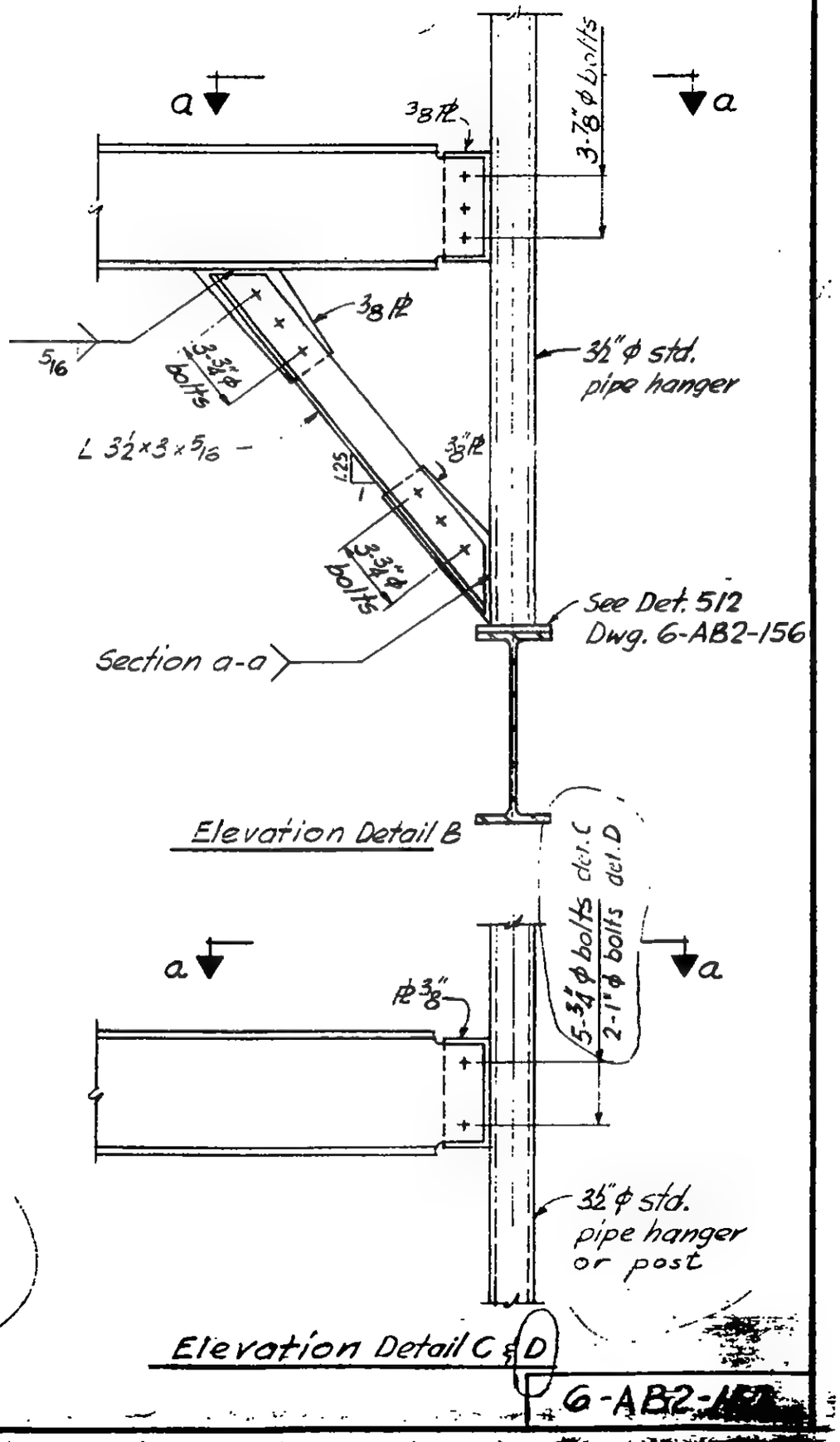

Elevation Detail C & D

G-AB2-157

LICENSED PROFESSIONAL ENGINEER — LESLIE E. ROBERTSON — No. 34360 — UNIVERSITY OF THE STATE OF NEW YORK

WORTHINGTON, SKILLING, HELLE & JACKSON — Civil & Structural Engineers

PROJECT THE WORLD TRADE CENTER | TITLE CONNECTION DETAIL 510 A, B & C. | DATE 6-5-67

REVISIONS

10-2-67
12-21-67
5-7-68

Detail 510A

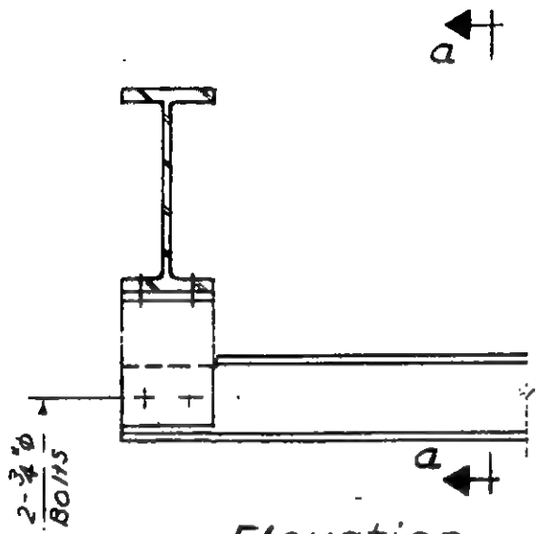

Elevation

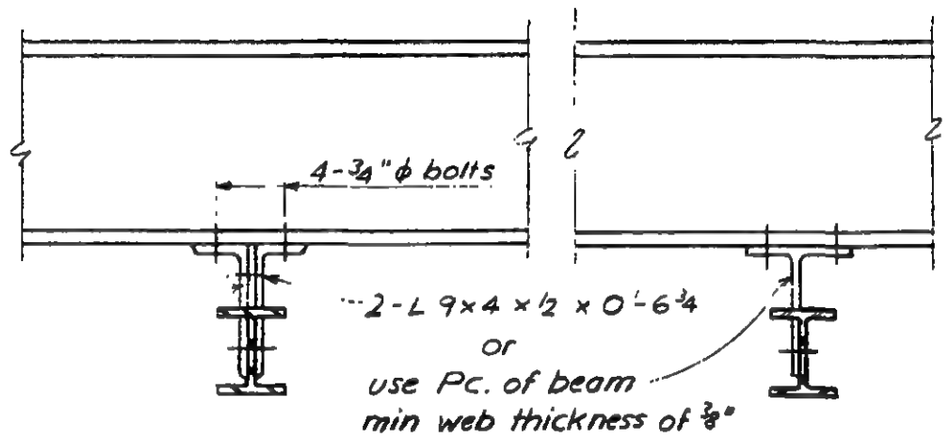

Section a-a

Detail 510 B, C

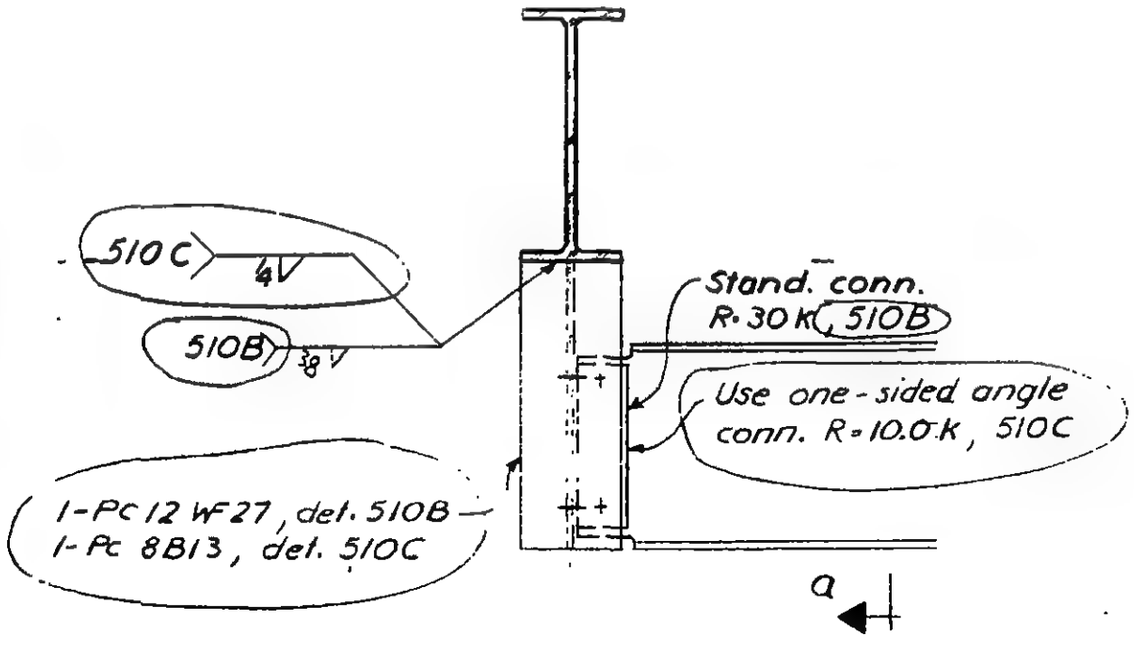

Elevation

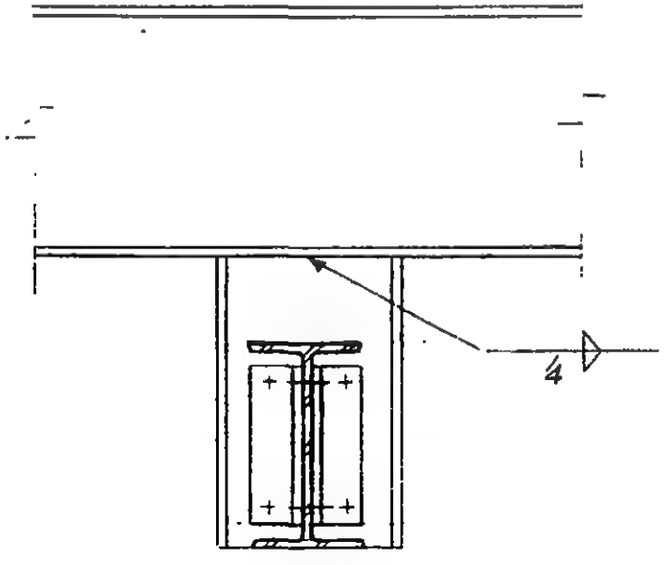

Section a-a

G-AB2-158

SKILLING - HELLE - CHRISTIANSEN - ROBERTSON Structural & Civil Engineers

PROJECT THE WORLD TRADE CENTER | TITLE CONNECTION DETAIL 513 A | DATE 8-14-67

REVISIONS

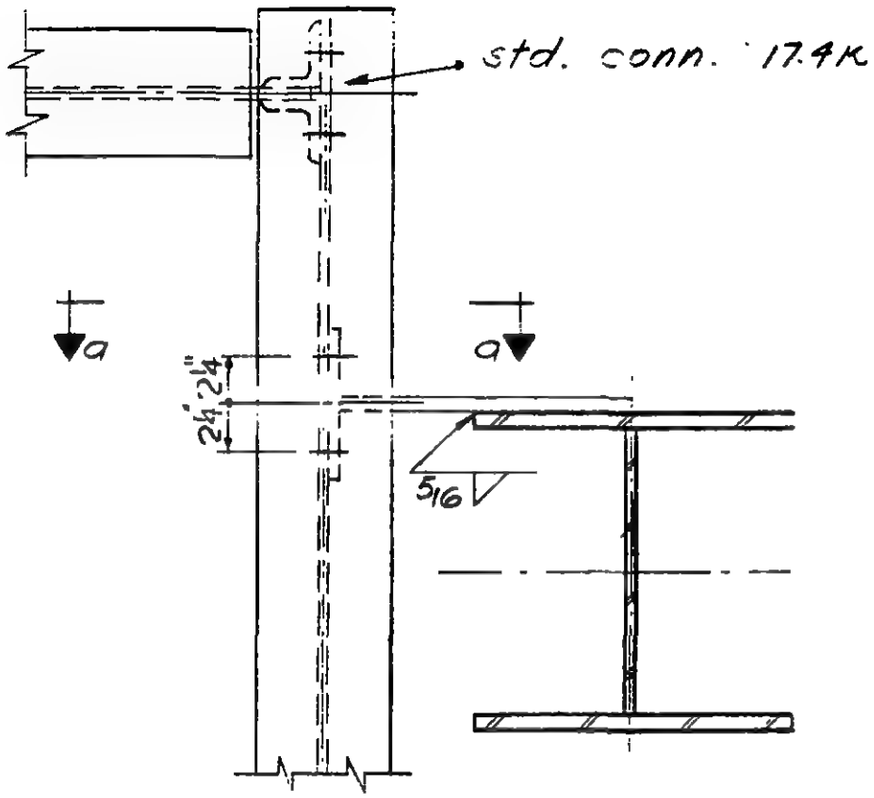

Plan

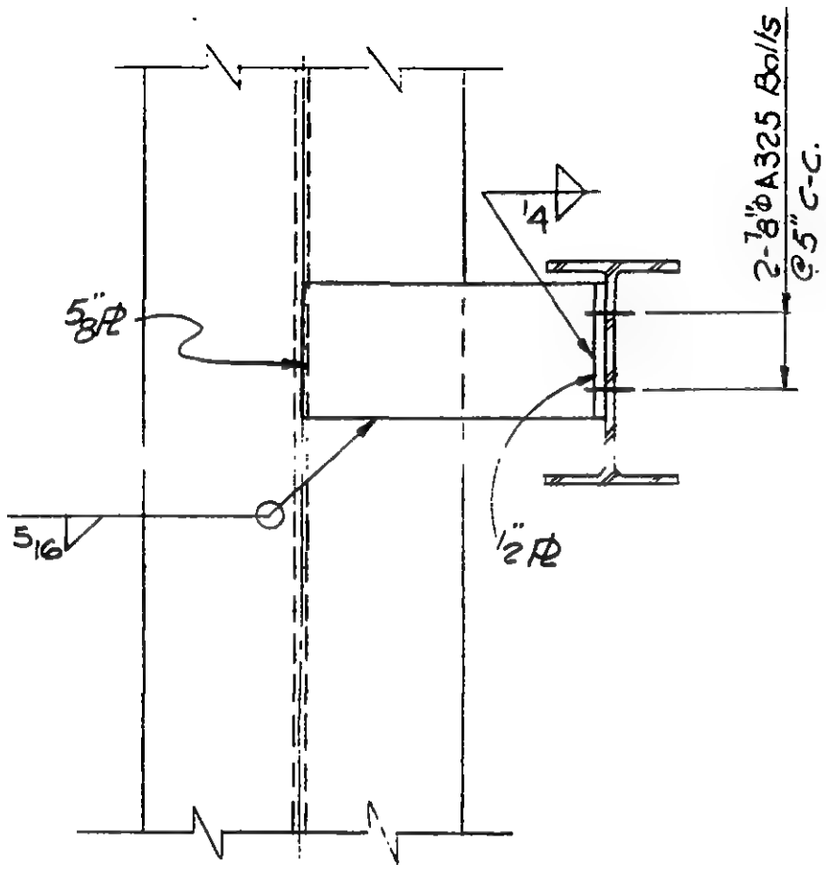

Section a-a

LICENSED PROFESSIONAL ENGINEER
LESLIE E. ROBERTSON
No. 34360
STATE OF THE STATE OF NEW YORK

6-AB2-160

SKILLING - HELLE - CHRISTIANSEN - ROBERTSON Structural & Civil Engineers

PROJECT THE WORLD TRADE CENTER | TITLE CONNECTION DETAIL 515 A-F | DATE 12-21-67

REVISIONS

2-9-68

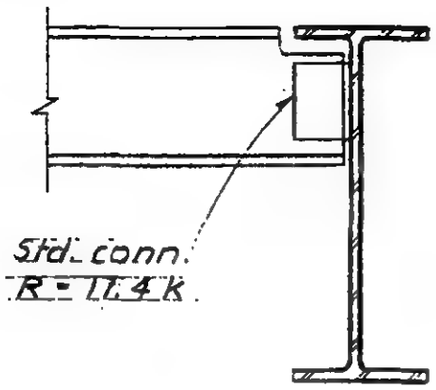

515 A

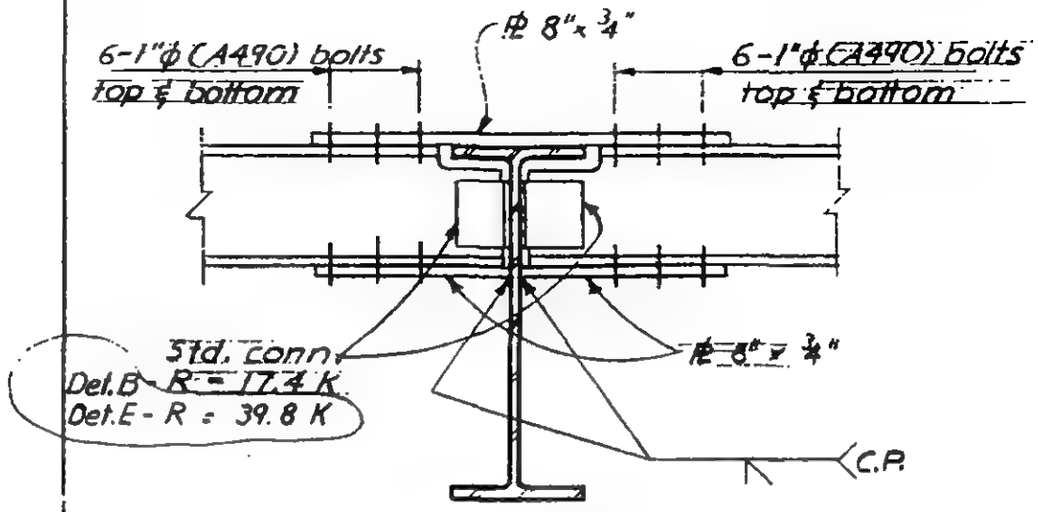

515 B E

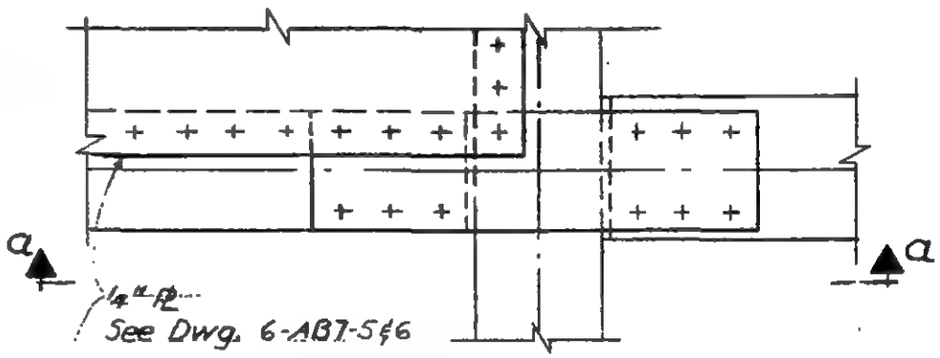

Plan

515 C F

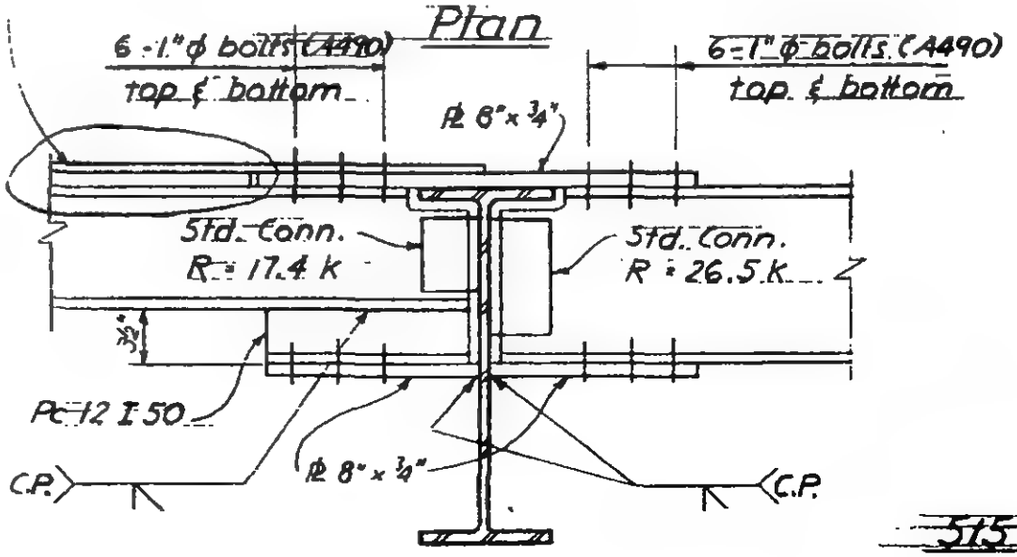

515 D

Section a-a

6-AB2-162

REGISTERED PROFESSIONAL ENGINEER
LESLIE E. ROBERTSON
No. 34360
UNIVERSITY OF THE STATE OF NEW YORK

SKILLING - HELLE - CHRISTIANSEN - ROBERTSON Structural & Civil Engineers

PROJECT THE WORLD TRADE CENTER | TITLE CONNECTION DETAIL 5/16 | DATE 3-14-67

REVISIONS

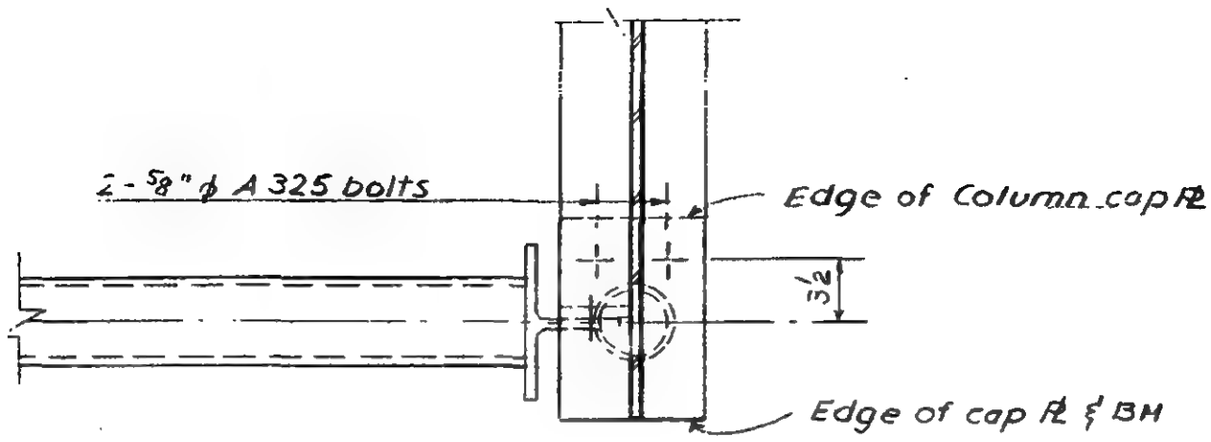

Plan

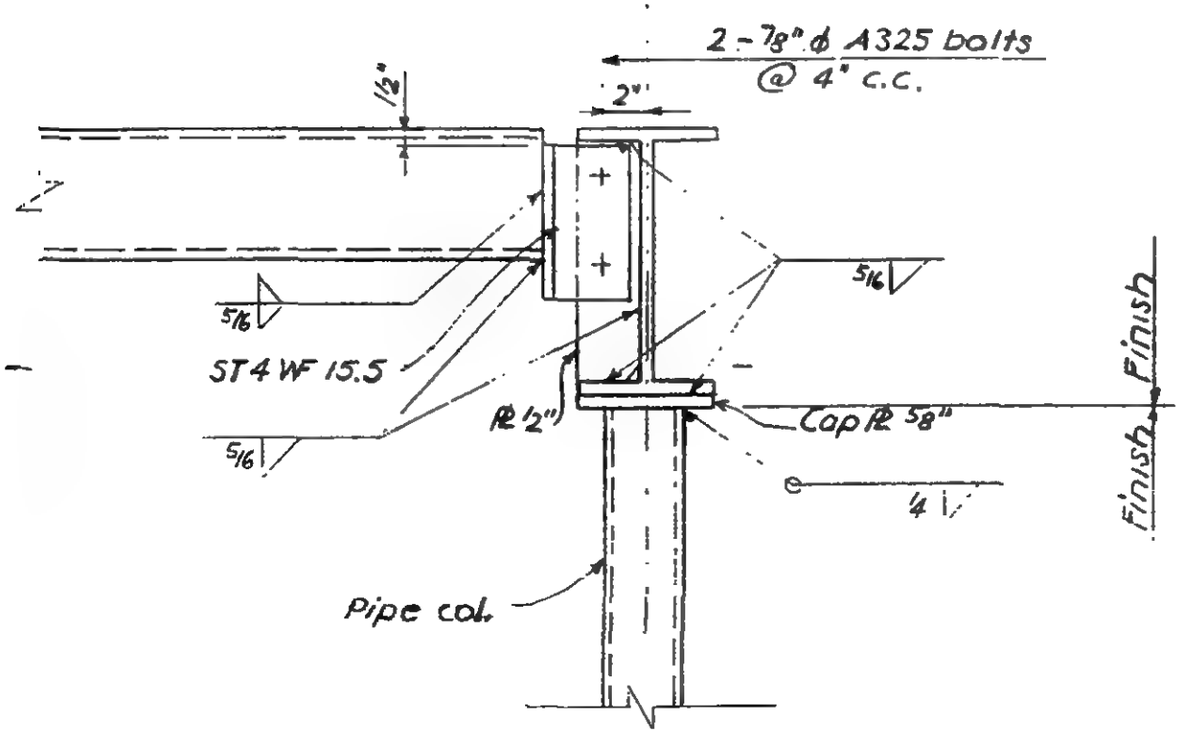

Elevation

LICENSED PROFESSIONAL ENGINEER
LESLIE E. ROBERTSON
No. 34360
UNIVERSITY OF THE STATE OF NEW YORK

6-AB2-163

WORTHINGTON, SKILLING, HELLE & JACKSON — Civil & Structural Engineers

PROJECT THE WORLD TRADE CENTER | TITLE CONNECTION DETAIL 517 A,B | DATE 6-30-67

REVISIONS

10-5-67

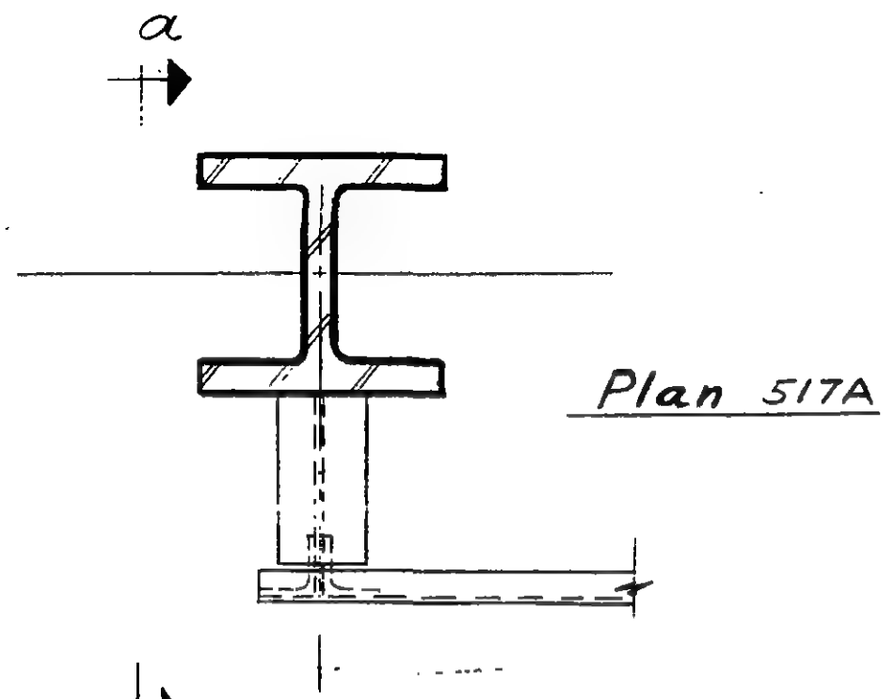

Plan 517A

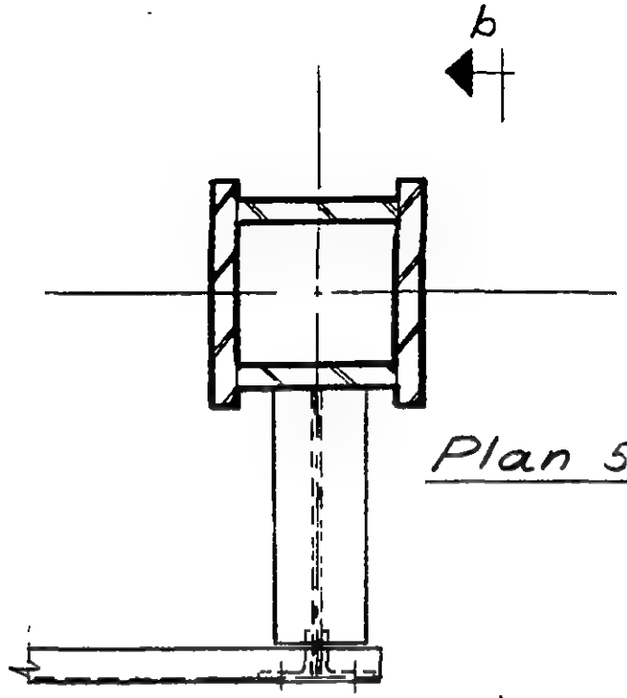

Plan 517B

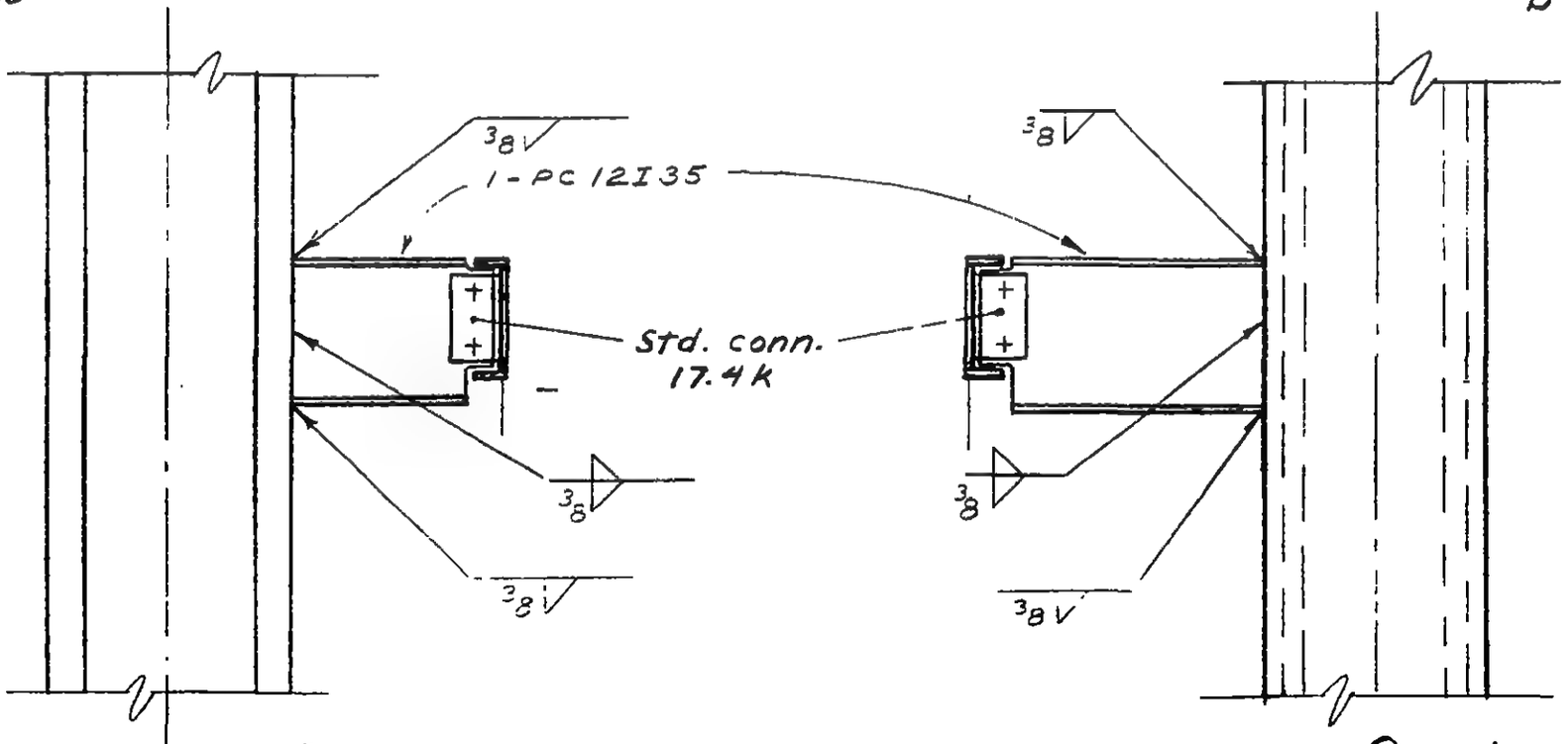

Section a-a

Section b-b

LICENSED PROFESSIONAL ENGINEER
LESLIE E. ROBERTSON
No. 34360
UNIVERSITY OF THE STATE OF NEW YORK

6-AB2-164

SKILLING - HELLE - CHRISTIANSEN - ROBERTSON Structural & Civil Engineers

PROJECT THE WORLD TRADE CENTER | TITLE CONNECTION DETAIL 3:8 | DATE 8-15-67

REVISIONS

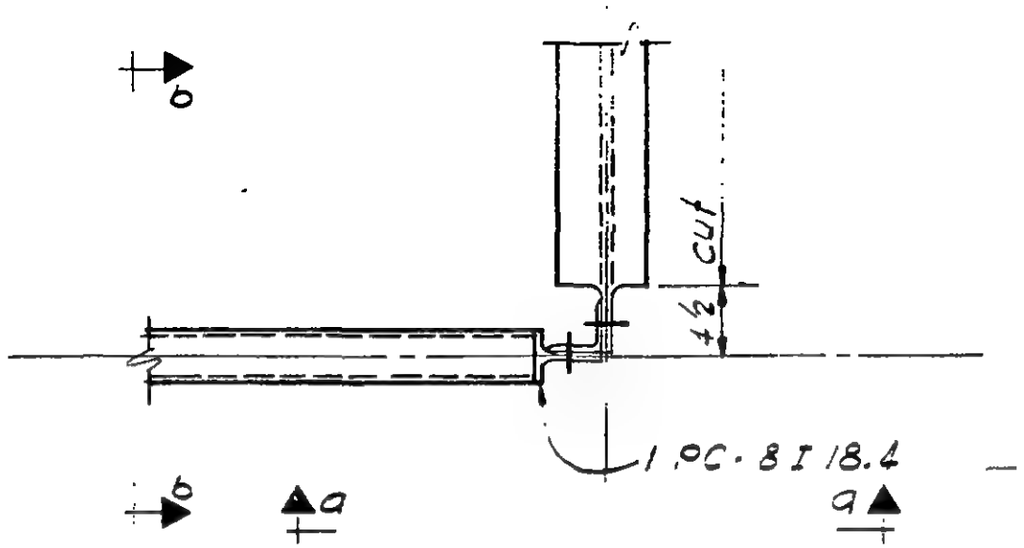

Plan

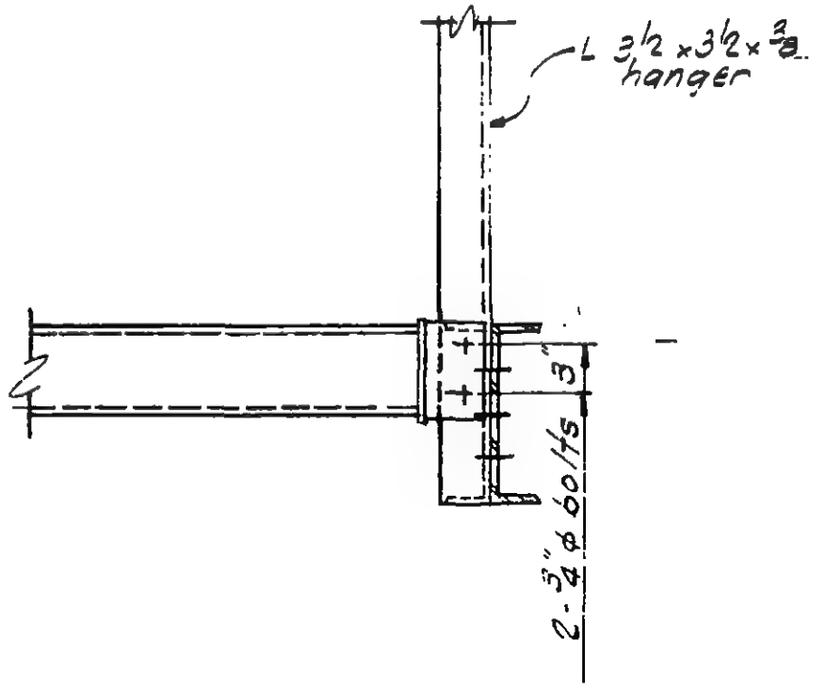

Section a-a

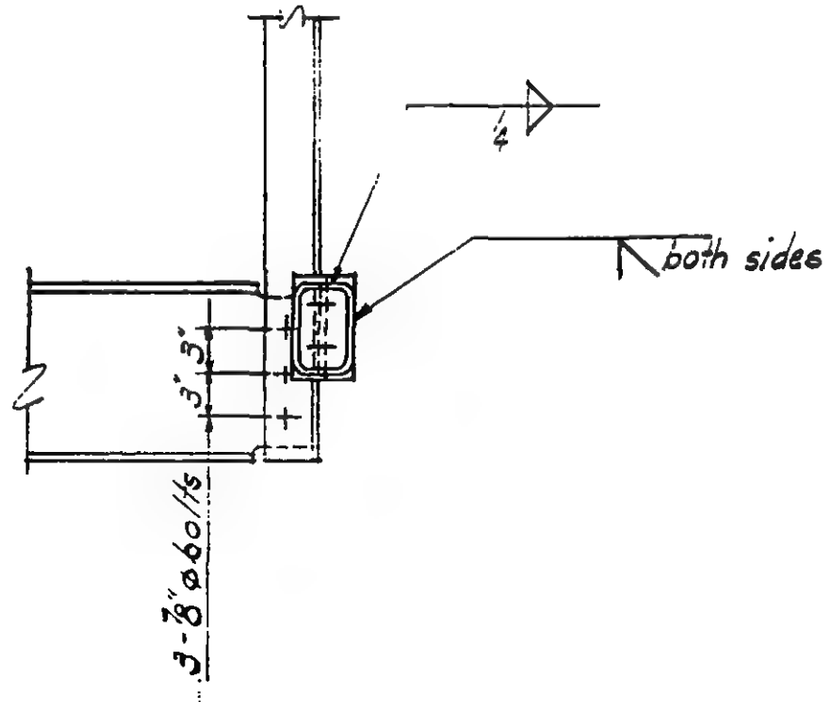

Section b-b

LICENSED PROFESSIONAL ENGINEER
LESLIE E. ROBERTSON
No. 34360
UNIVERSITY OF THE STATE OF NEW YORK

6-AB2-165

WORTHINGTON, SKILLING, HELLE & JACKSON — Civil & Structural Engineers

PROJECT THE WORLD TRADE CENTER | TITLE CONNECTION DETAIL 519 | DATE 8-5-67

REVISIONS

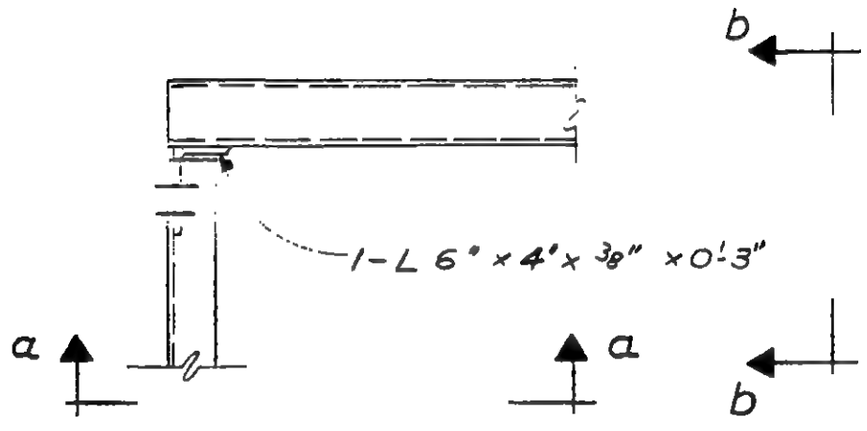

Plan

Section a-a

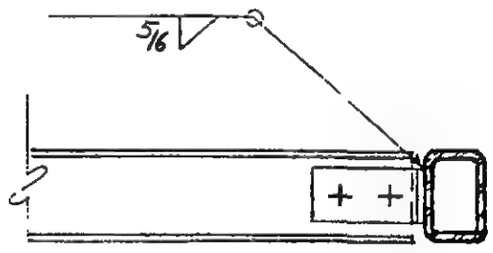

Section b-b

LICENSED PROFESSIONAL ENGINEER
LESLIE E. ROBERTSON
No. 34360
UNIVERSITY OF THE STATE OF NEW YORK

6-AB2-166

SKILLING - HELLE - CHRISTIANSEN - ROBERTSON Structural & Civil Engineers

PROJECT THE WORLD TRADE CENTER | TITLE CONNECTION DETAIL 520 | DATE 8-5-67

REVISIONS

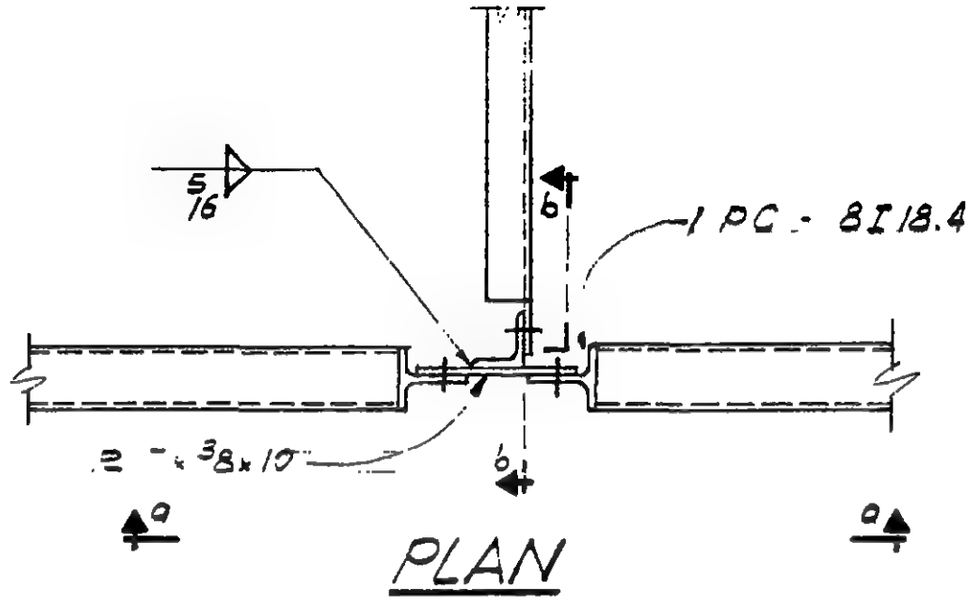

PLAN

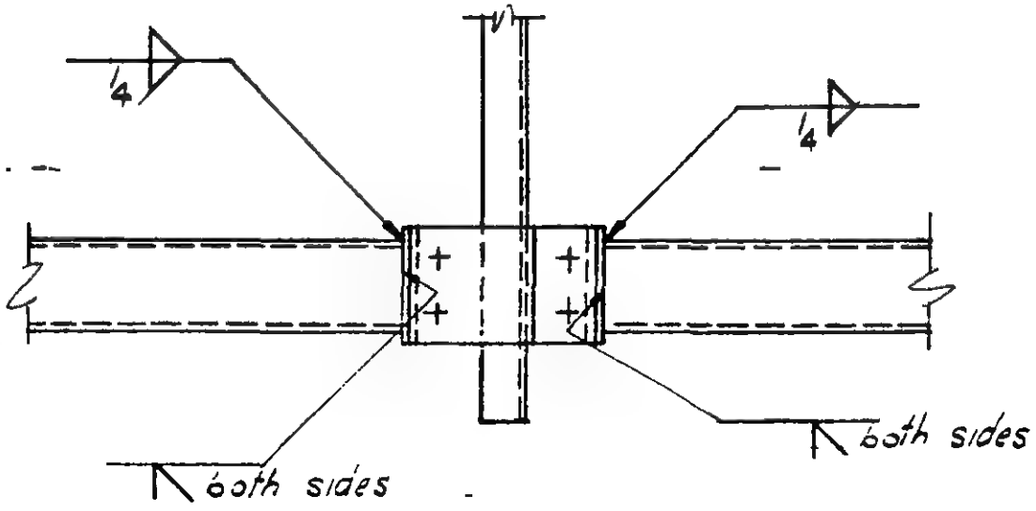

Section a-a

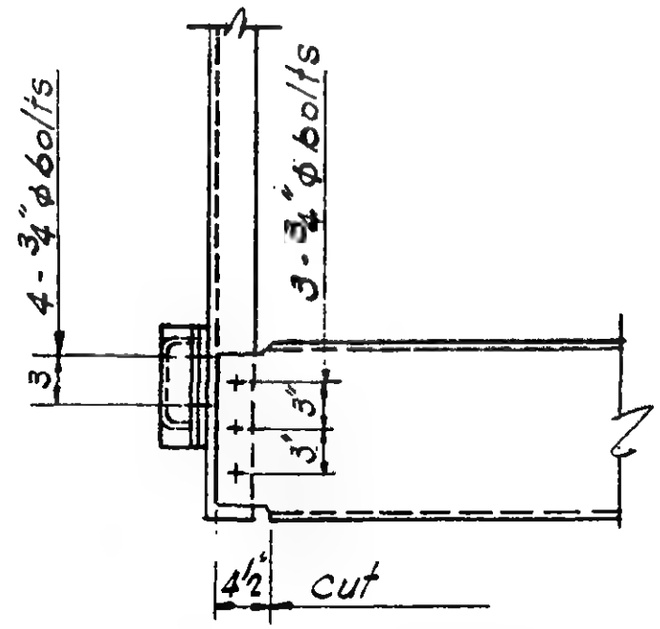

Section b-b

LICENSED PROFESSIONAL ENG'R
LESLIE E. ROBERTSON
No. 34360
UNIVERSITY OF THE STATE OF NEW YORK

G-AB2-167

SKILLING - HELLE - CHRISTIANSEN - ROBERTSON Structural & Civil Engineers

PROJECT THE WORLD TRADE CENTER | TITLE CONNECTION DETAILS 521 & 522 | DATE 8-5-67

REVISIONS

9-29-67

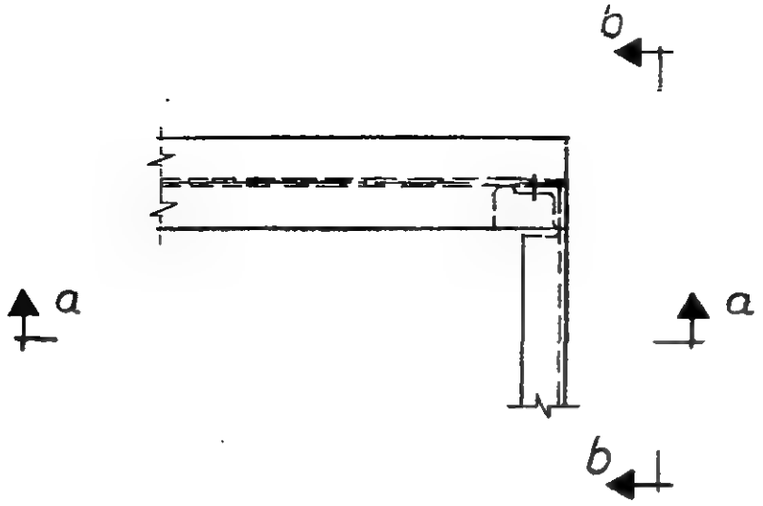

Plan

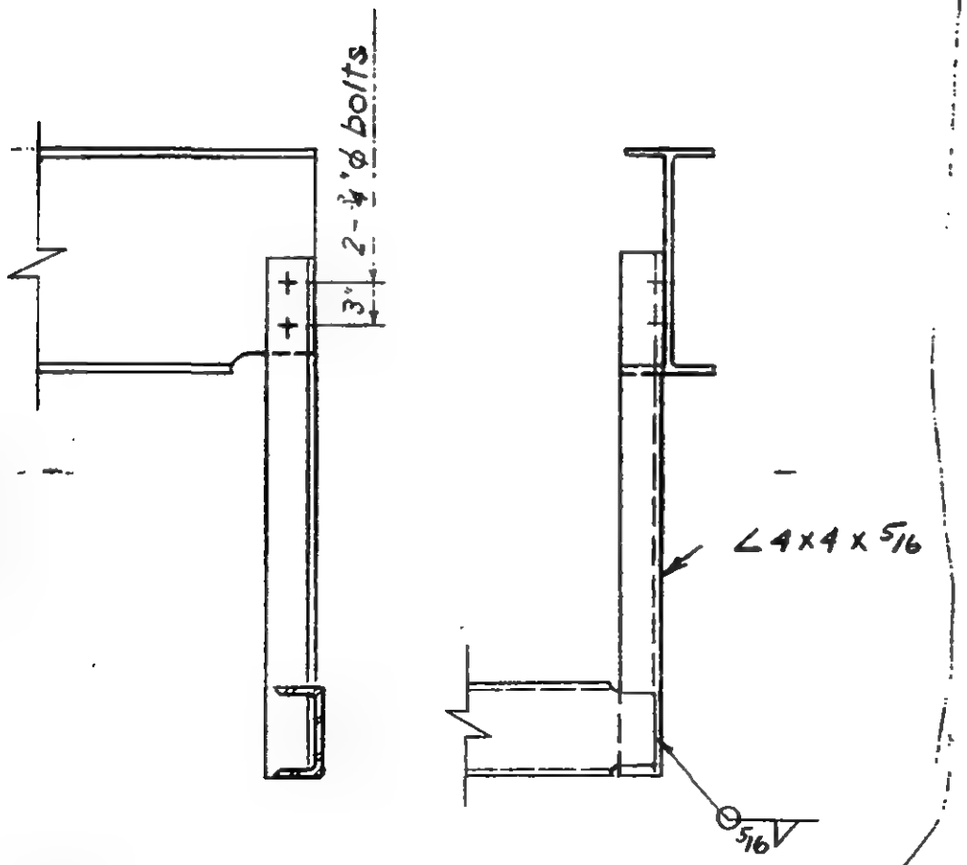

Section a-a Section b-b

DETAIL 521

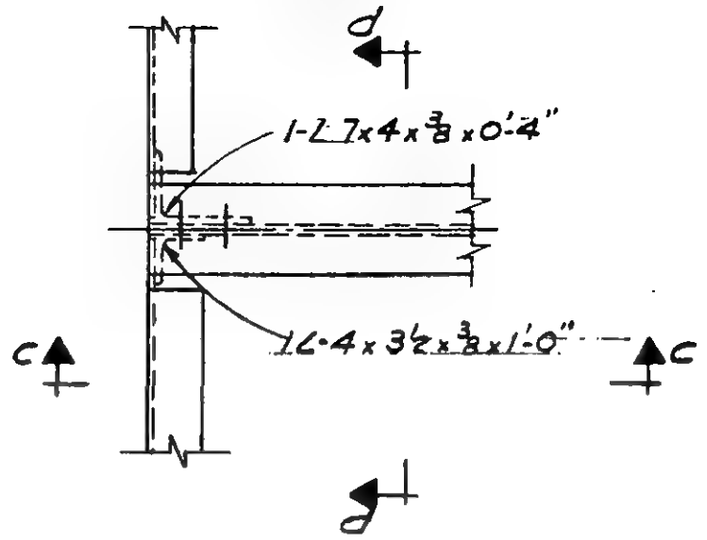

Plan

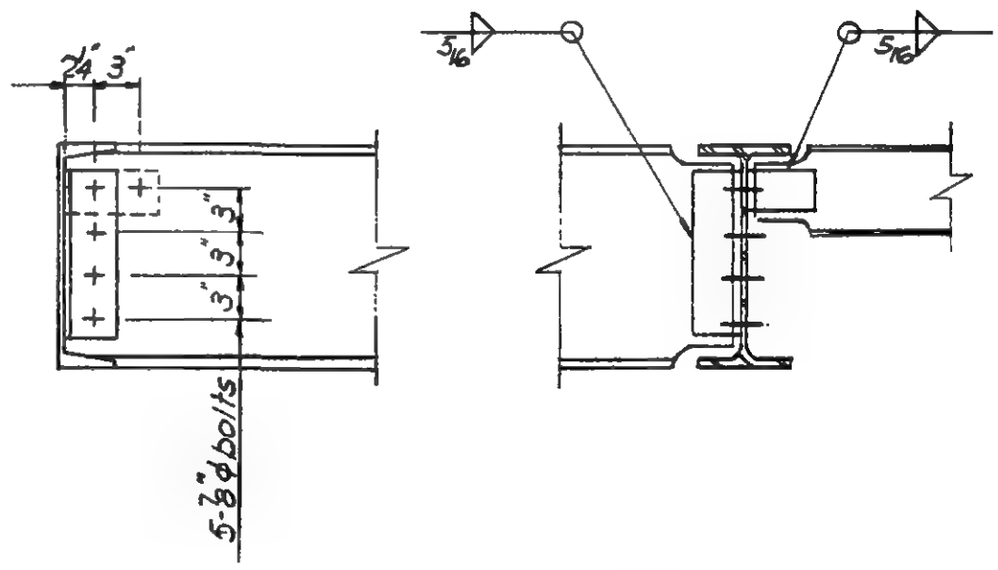

Section c-c Section d-d

DETAIL 522

LICENSED PROFESSIONAL ENGINEER
LESLIE E. ROBERTSON
No. 34360
UNIVERSITY OF THE STATE OF NEW YORK

6-AB2-168

SKILLING - HELLE - CHRISTIANSEN - ROBERTSON Structural & Civil Engineers

PROJECT THE WORLD TRADE CENTER | TITLE CONNECTION DETAIL 524 A | DATE 8-14-67

REVISIONS

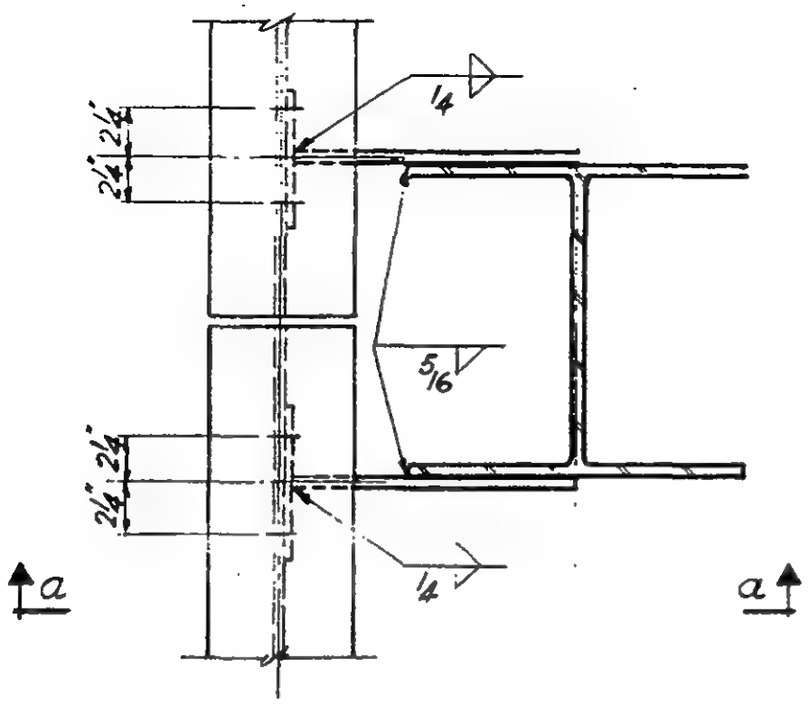

Plan

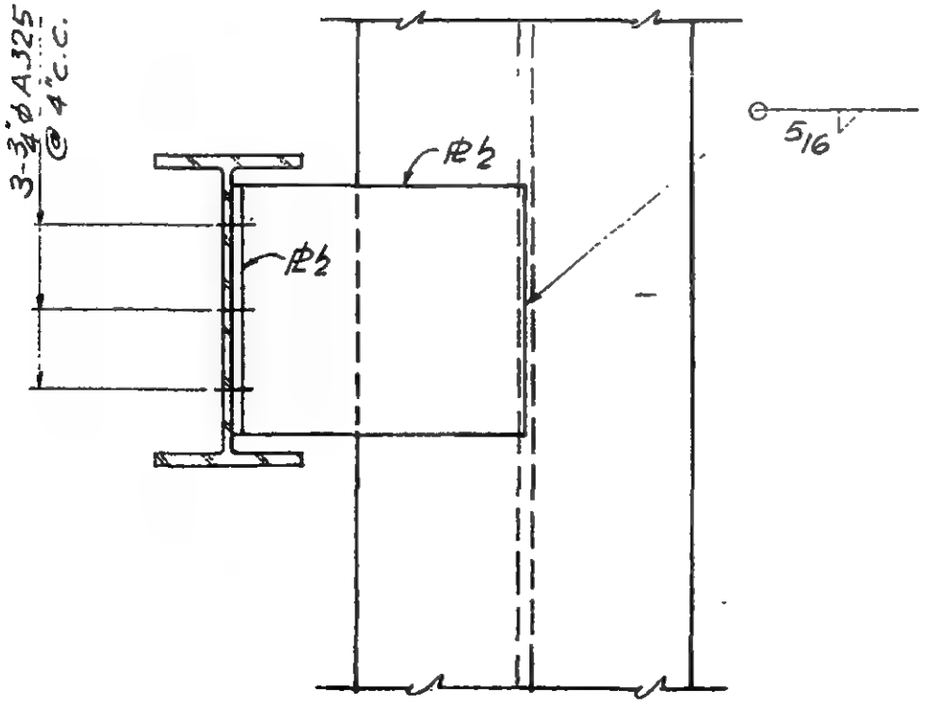

Section a-a

LICENSED PROFESSIONAL ENGINEER
LESLIE E. ROBERTSON
No. 34360
UNIVERSITY OF THE STATE OF NEW YORK

6-AB2-169

SKILLING - HELLE - CHRISTIANSEN - ROBERTSON Structural & Civil Engineers

PROJECT THE WORLD TRADE CENTER | TITLE CONNECTION DETAIL 525 A | DATE 8-14-67

REVISIONS

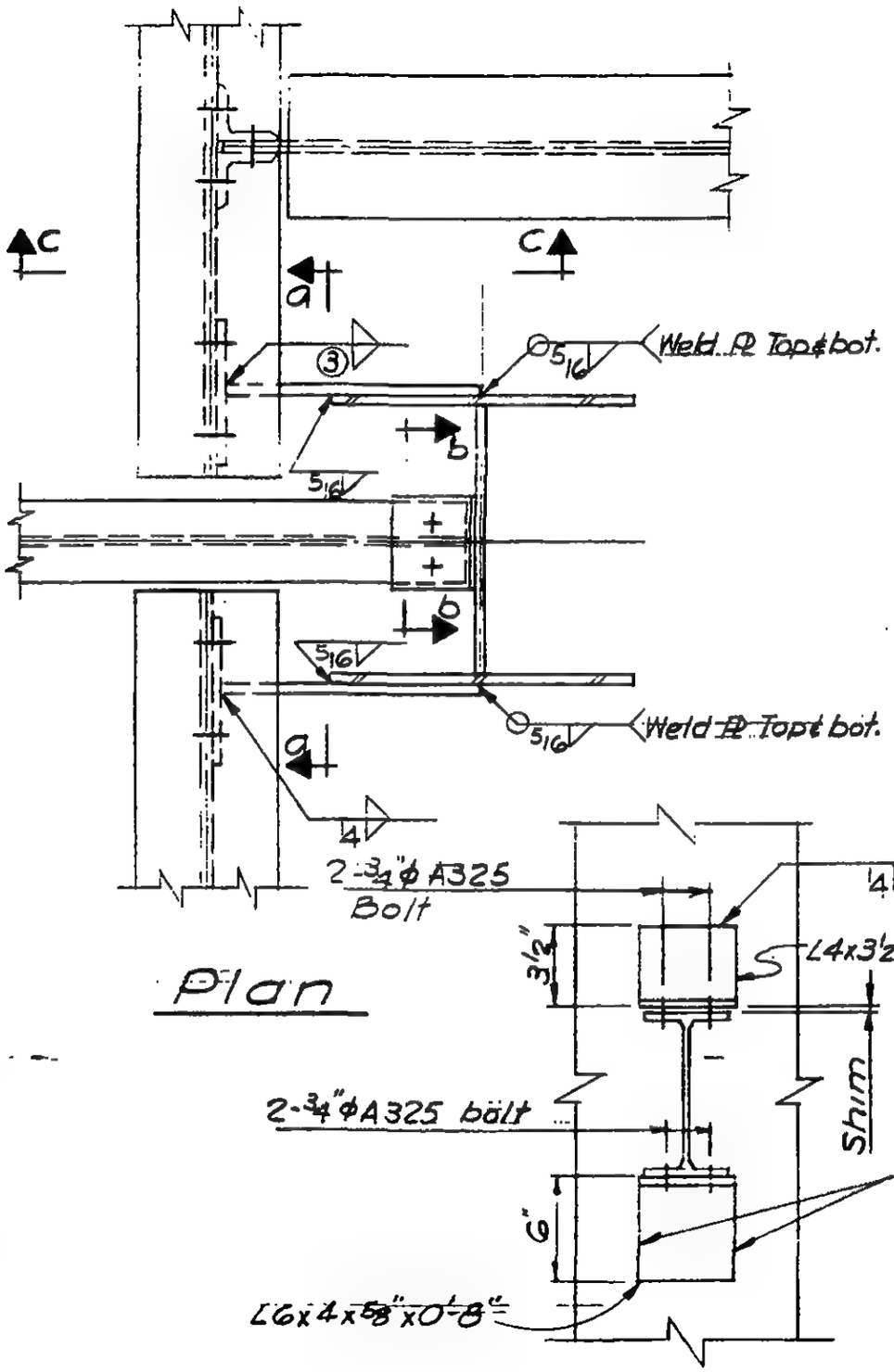

Plan

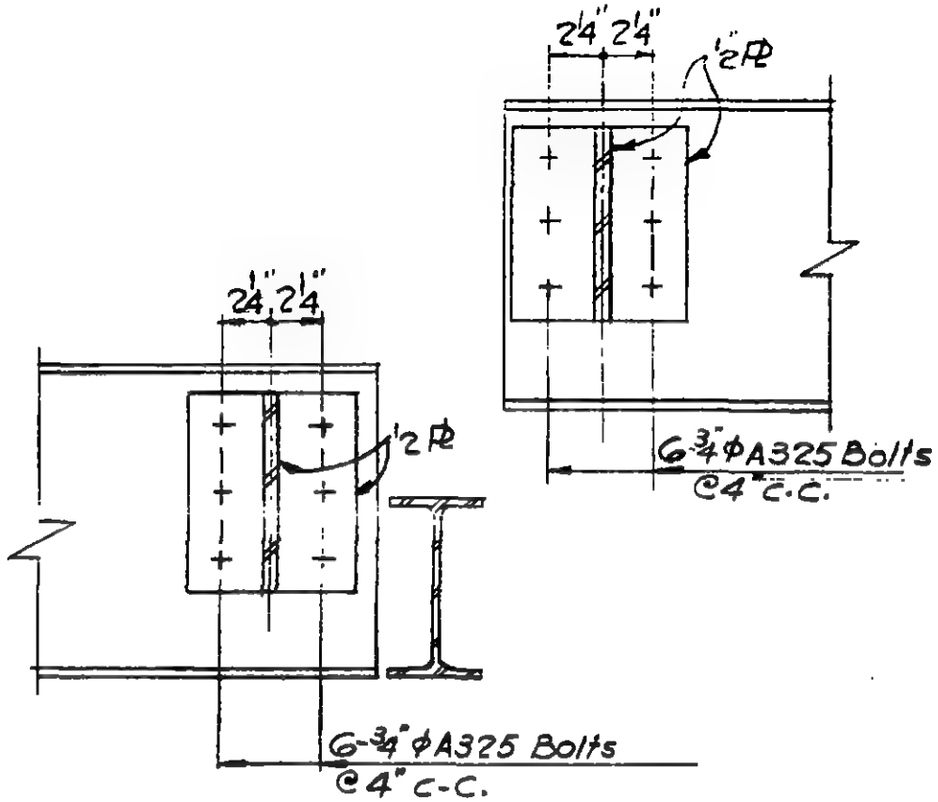

Section a-a

Section b-b

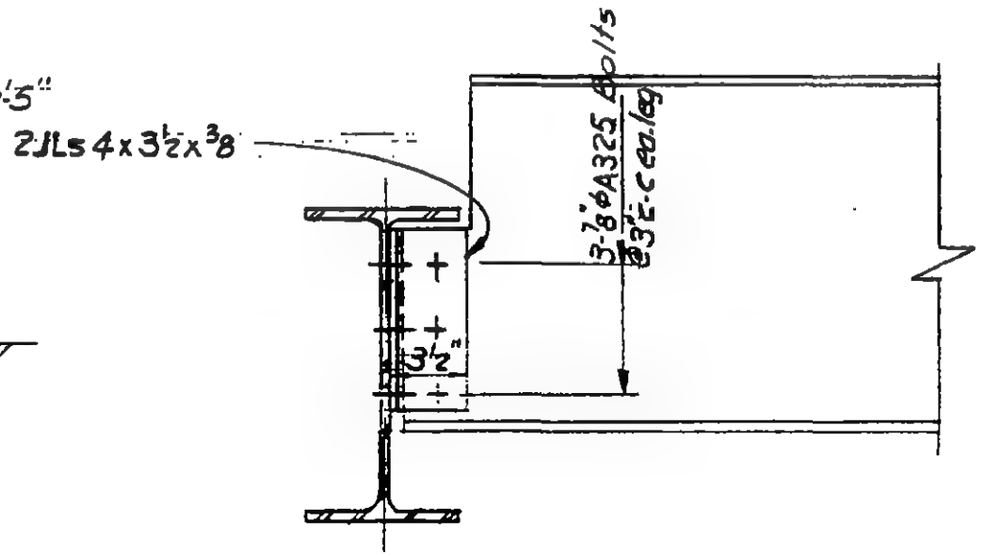

Section c-c

6-AB2-170

LICENSED PROFESSIONAL ENGINEER
LESLIE E. ROBERTSON
No. 34360
UNIVERSITY OF THE STATE OF NEW YORK

SKILLING - HELLE - CHRISTIANSEN - ROBERTSON Structural & Civil Engineers

PROJECT THE WORLD TRADE CENTER | TITLE CONNECTION DETAIL 526 A | DATE 8-14-67

REVISIONS

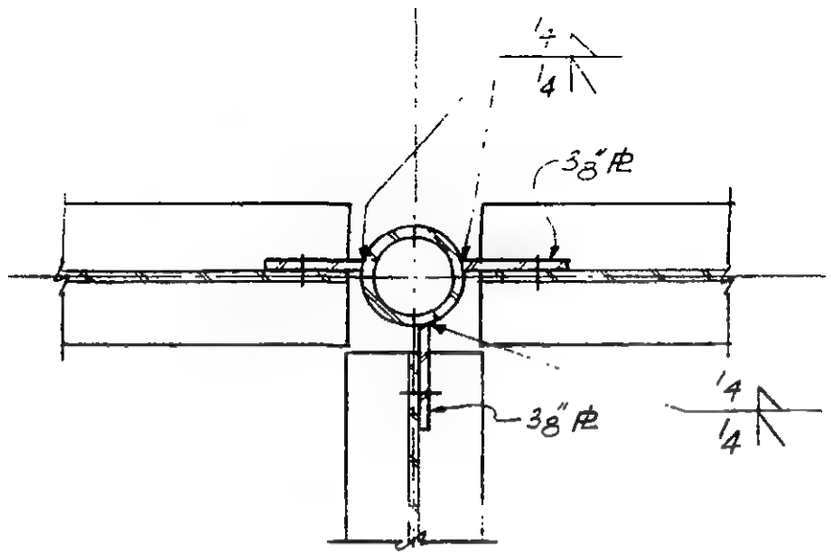

Section a-a

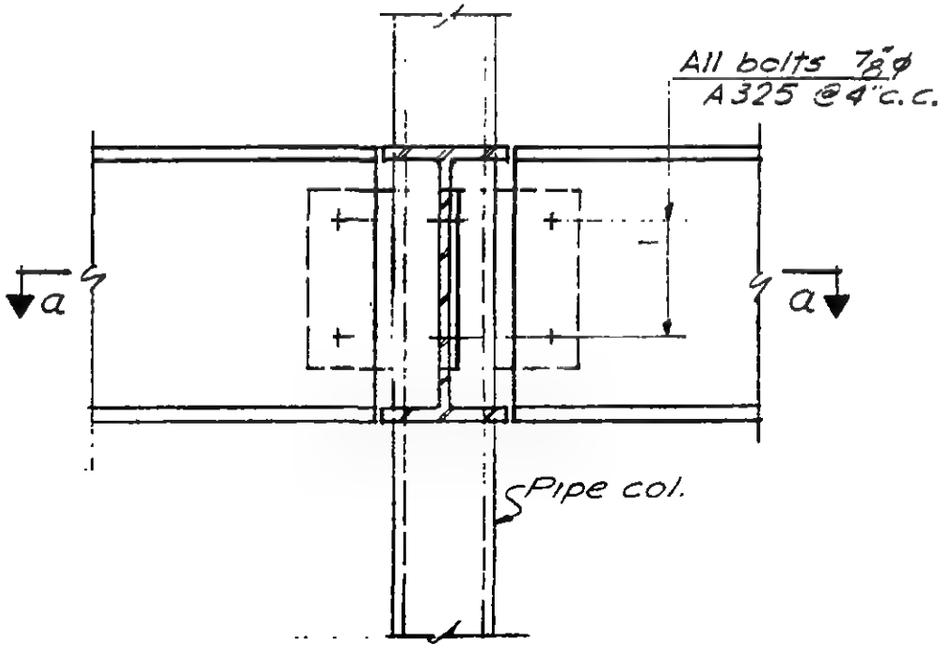

Elevation

LICENSED PROFESSIONAL ENGINEER
LESLIE E. ROBERTSON
No. 34360
UNIVERSITY OF THE STATE OF NEW YORK

6-AB2-171

SKILLING - HELLE - CHRISTIANSEN - ROBERTSON Structural & Civil Engineers

PROJECT THE WORLD TRADE CENTER | TITLE CONNECTION DETAIL 527A | DATE 8-14-67

REVISIONS

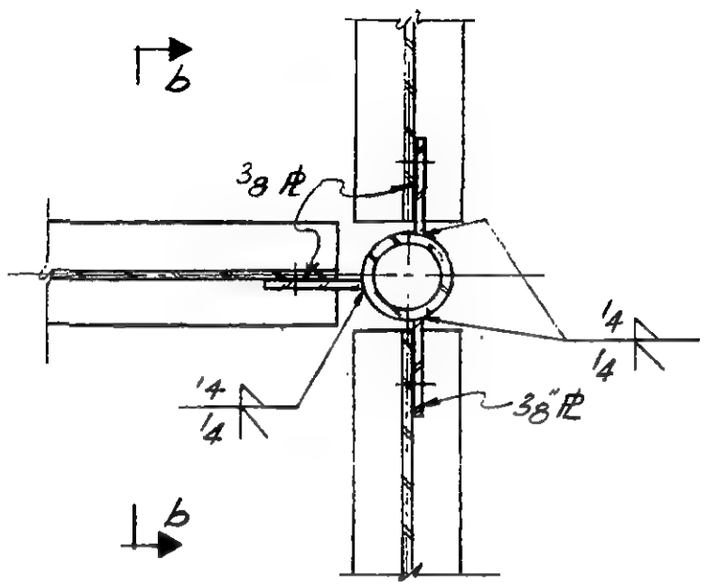

Plan a-a

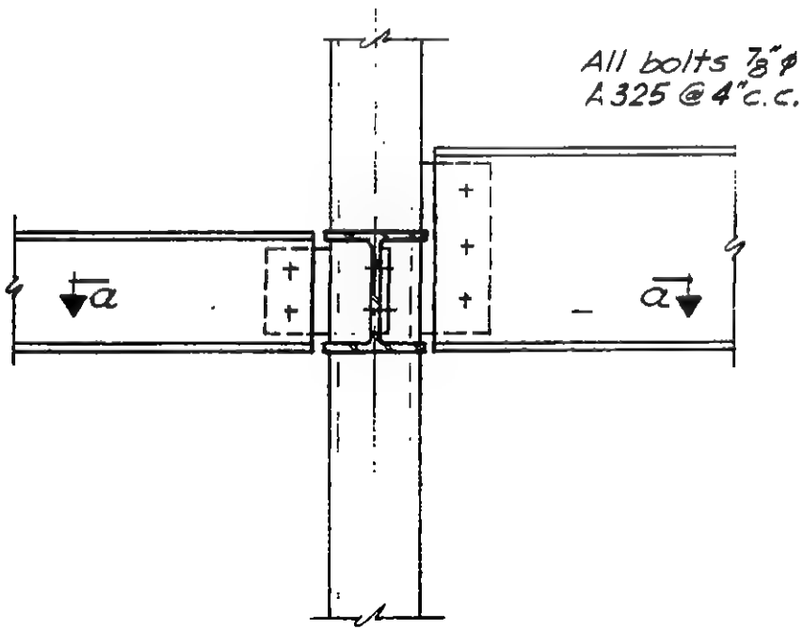

Section b-b

LICENSED PROFESSIONAL ENGINEER
LESLIE E. ROBERTSON
No. 24260
UNIVERSITY OF THE STATE OF N.Y.

6-AB2-172

SKILLING - HELLE - CHRISTIANSEN - ROBERTSON Structural & Civil Engineers

PROJECT THE WORLD TRADE CENTER | TITLE CONNECTION DETAIL 528 A | DATE 3-14-67

REVISIONS

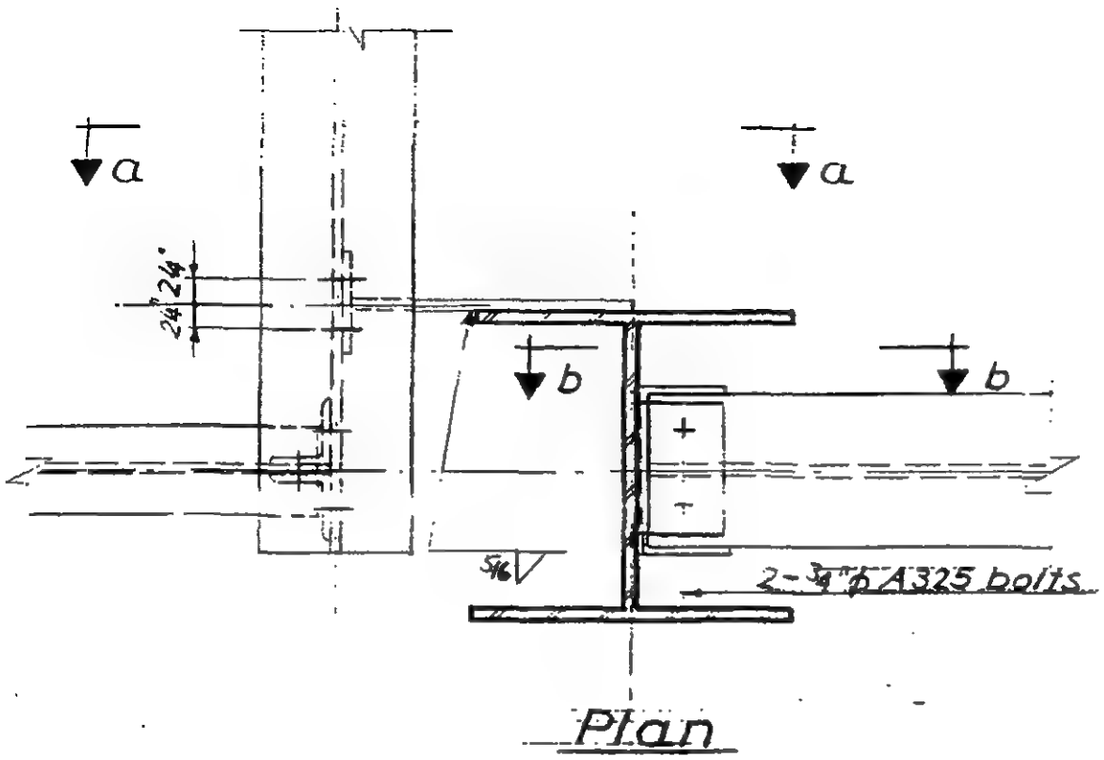

Plan

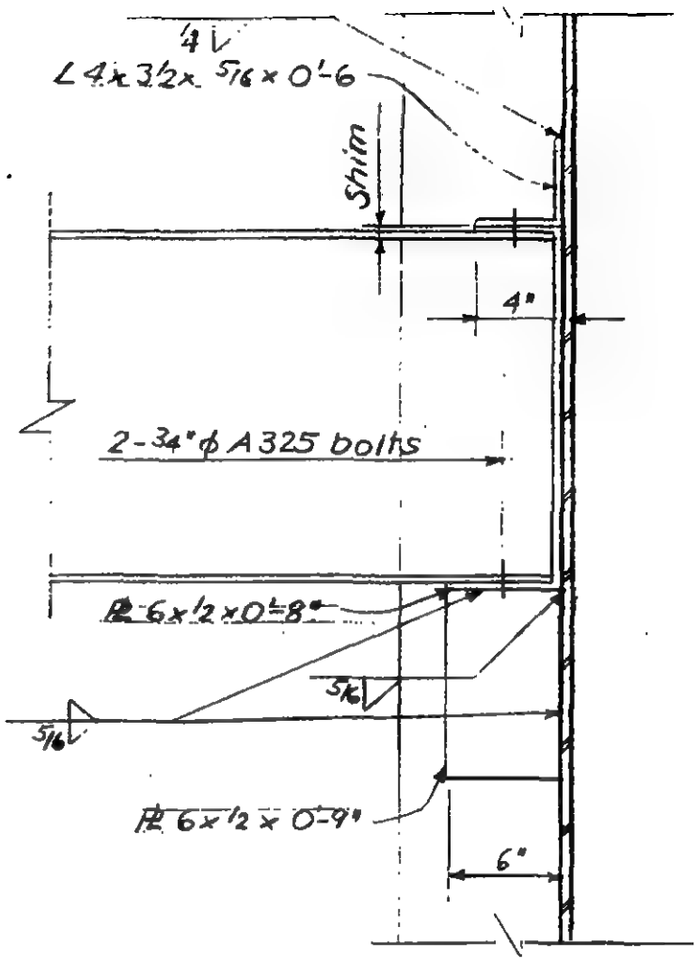

Section b-b

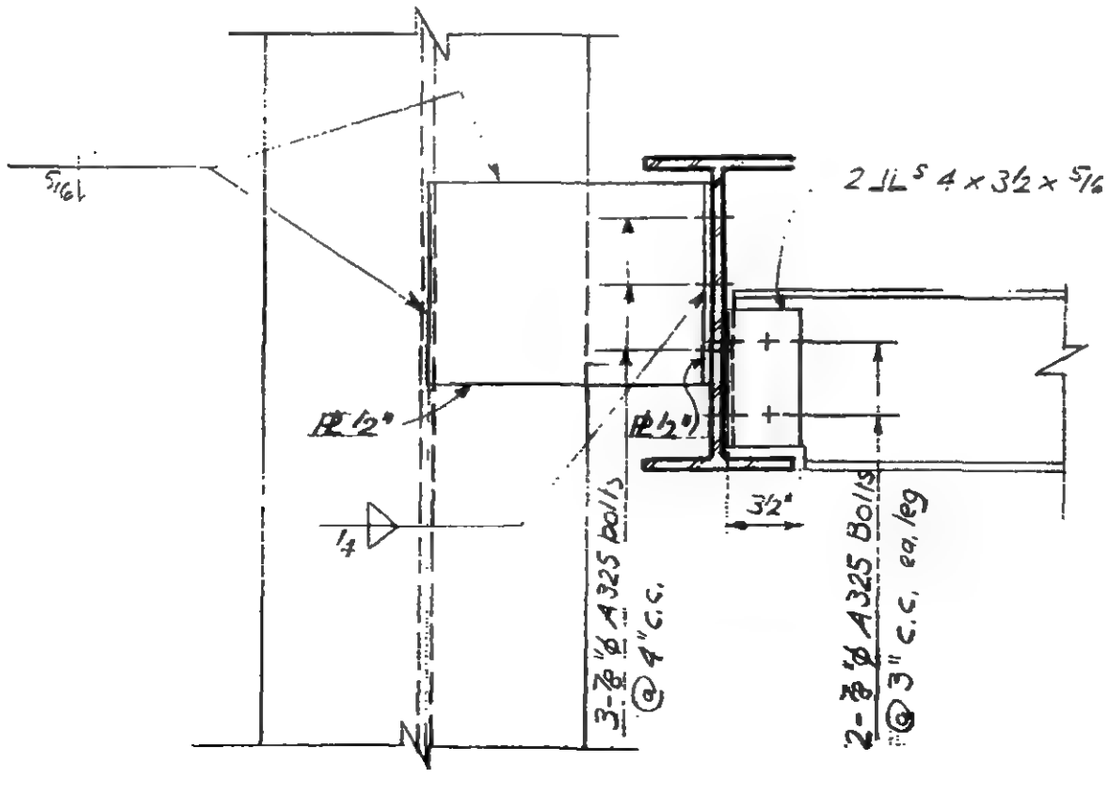

Section a-a

LICENSED PROFESSIONAL ENGINEER
LESLIE E. ROBERTSON
No. 34360
UNIVERSITY OF THE STATE OF NEW YORK

6-AB2-173

SKILLING - HELLE - CHRISTIANSEN - ROBERTSON Structural & Civil Engineers

PROJECT THE WORLD TRADE CENTER | TITLE CONNECTION DETAIL 529 A | DATE 8-14-67

REVISIONS

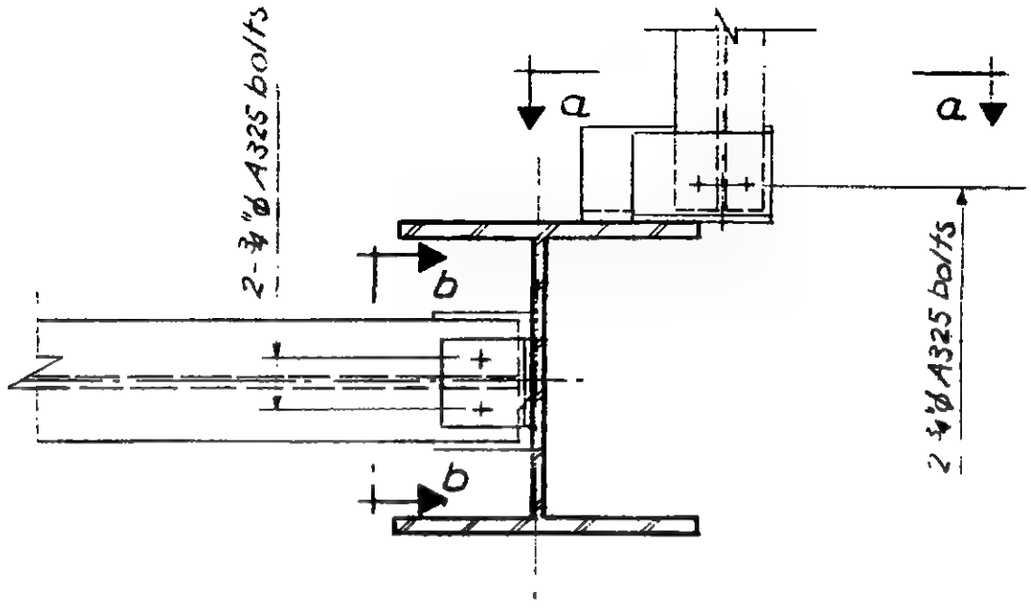

Plan

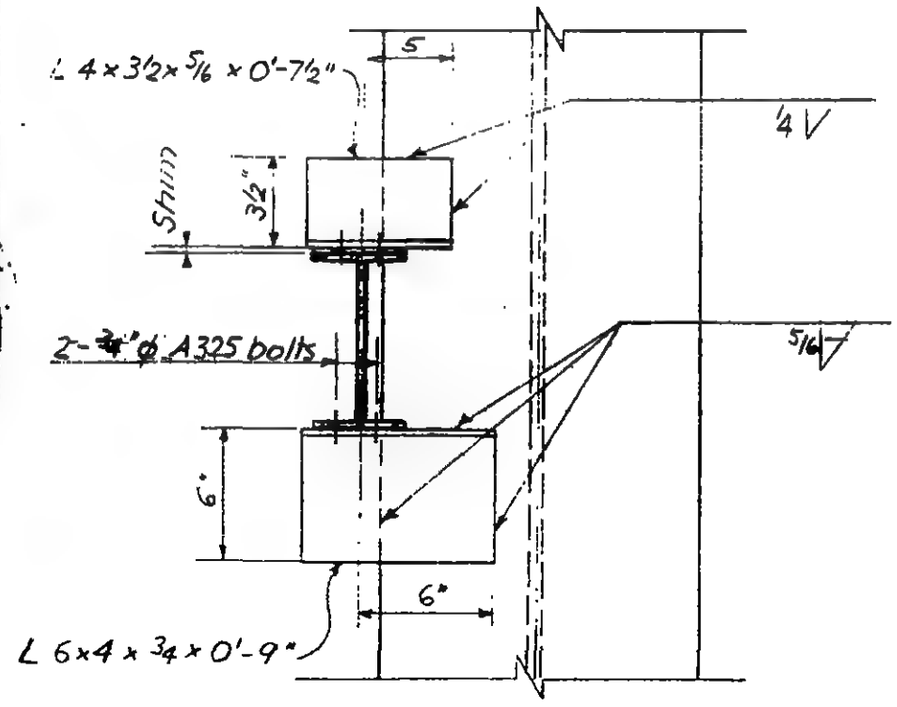

Section a-a

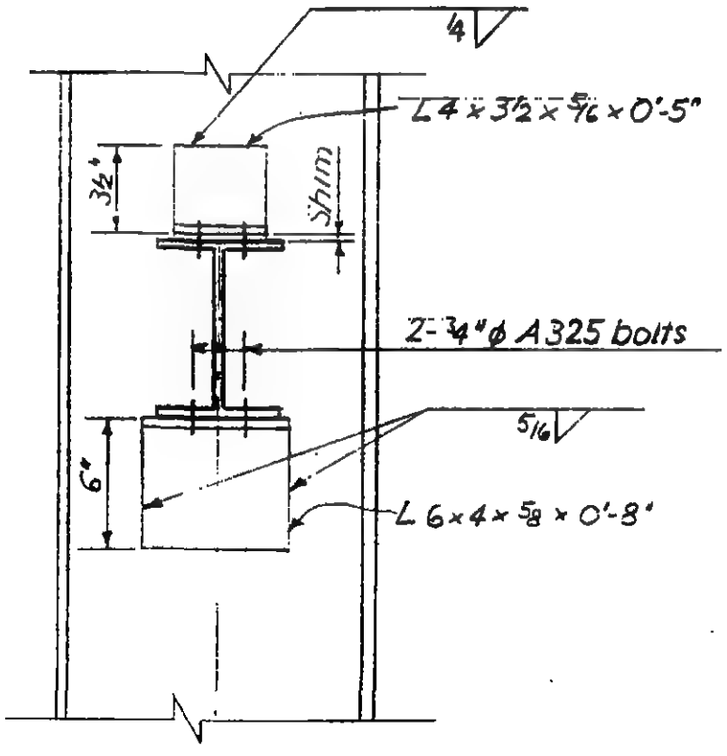

Section b-b

6-AB2-174

SKILLING - HELLE - CHRISTIANSEN - ROBERTSON Structural & Civil Engineers

PROJECT THE WORLD TRADE CENTER | TITLE CONNECTION DETAIL 530 - 533 | DATE 9-29-67

REVISIONS

1-21-68

7-17-68

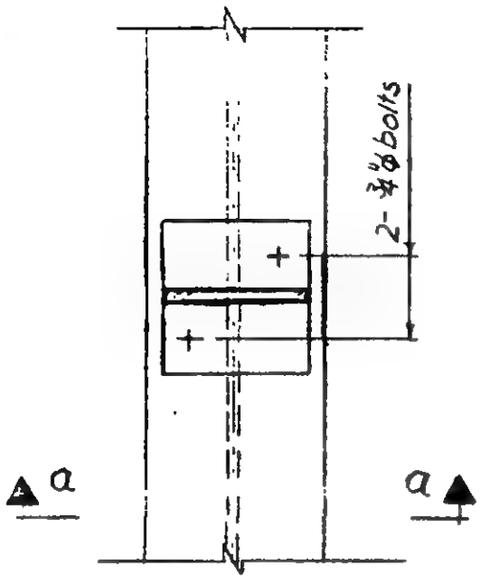

Plan
Detail 530

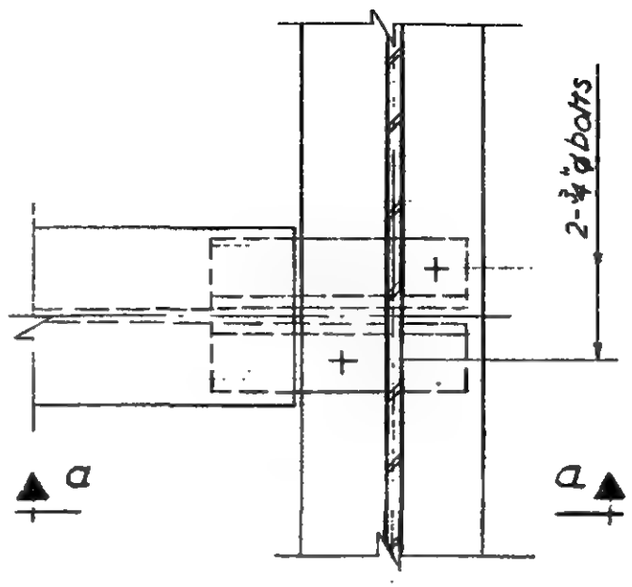

Plan
Detail 531

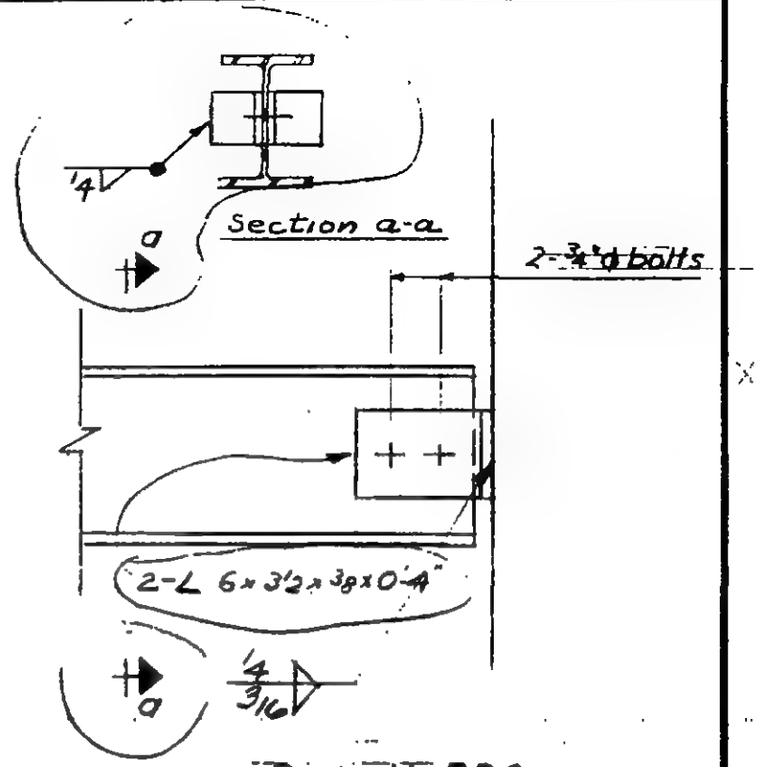

Detail 532

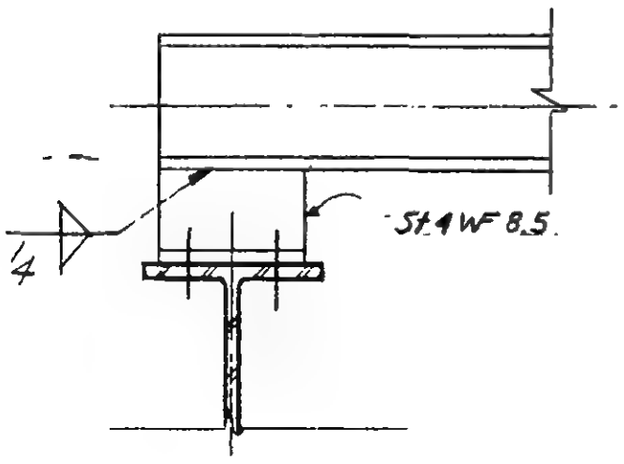

Section a-a

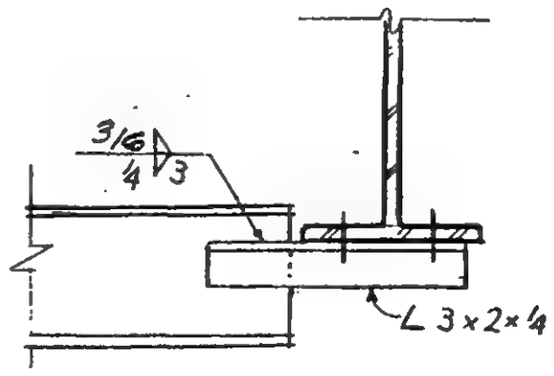

Section a-a

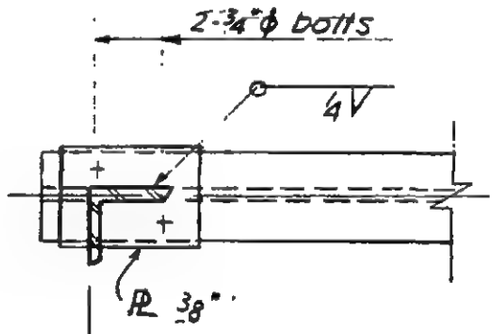

Detail 533

LICENSED PROFESSIONAL ENGINEER
LESLIE E. ROBERTSON
No. 34360
THE STATE OF NEW YORK

6-AB2-175

SKILLING - HELLE - CHRISTIANSEN - ROBERTSON — Structural & Civil Engineers

PROJECT THE WORLD TRADE CENTER | TITLE DETAIL 534, 534A, 534B | DATE 1-24-68

REVISIONS

2-21-68

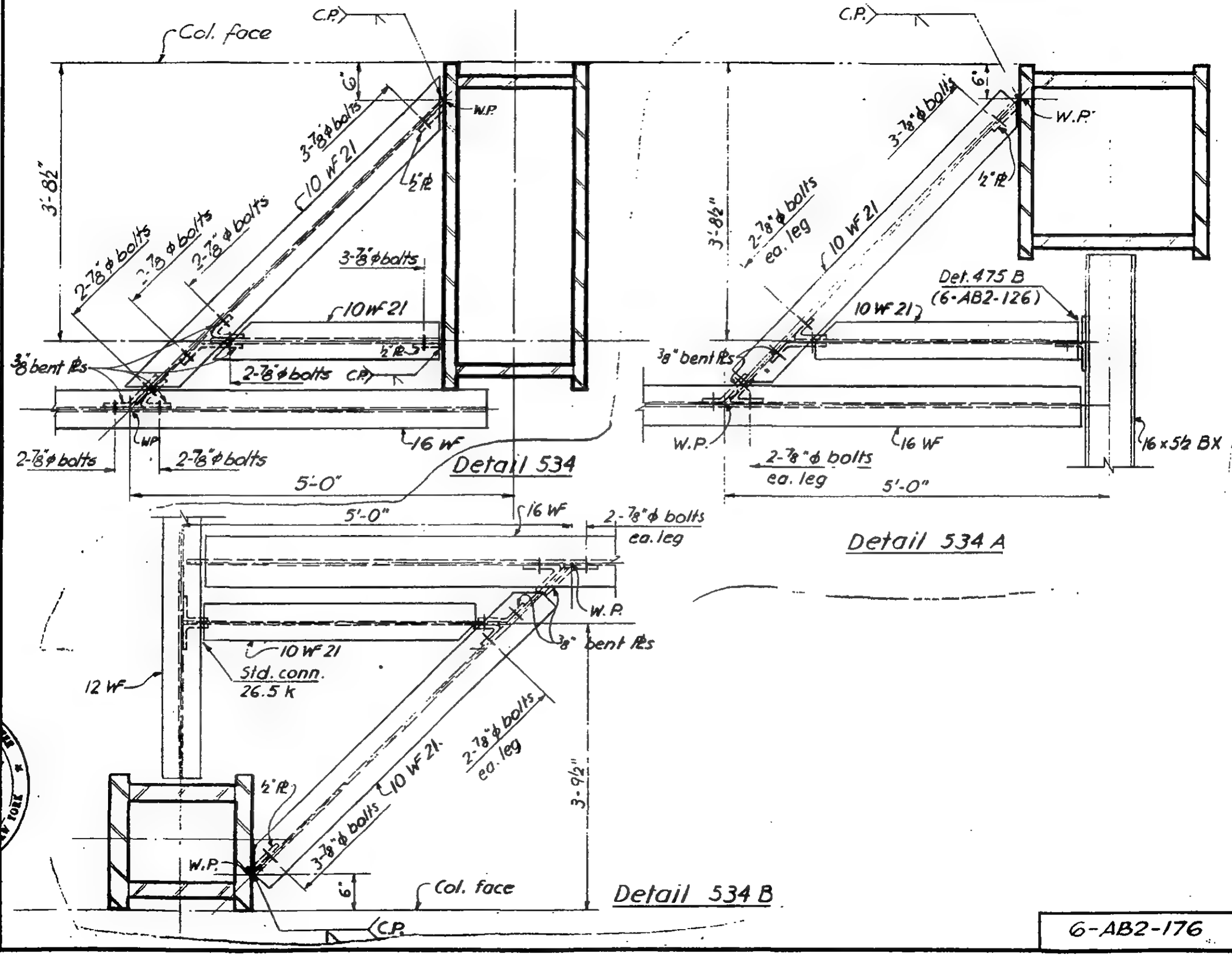

REGISTERED PROFESSIONAL ENGINEER
JAMES E. ROBERTSON
No. 34360
UNIVERSITY OF THE STATE OF NEW YORK

6-AB2-176

SKILLING - HELLE - CHRISTIANSEN - ROBERTSON Structural & Civil Engineers

PROJECT THE WORLD TRADE CENTER | TITLE CONNECTION DETAIL 535 A , 536 A | DATE 2-9-68

REVISIONS

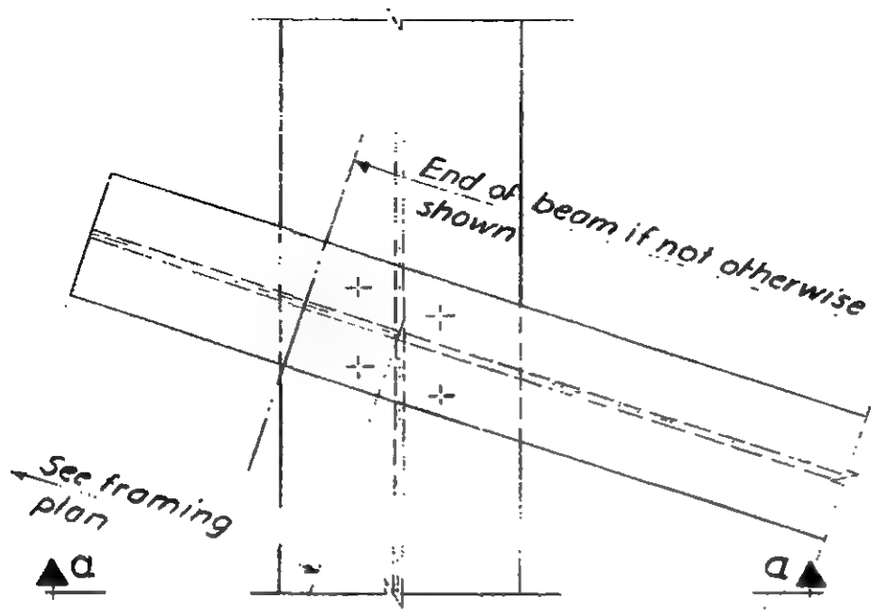

Plan

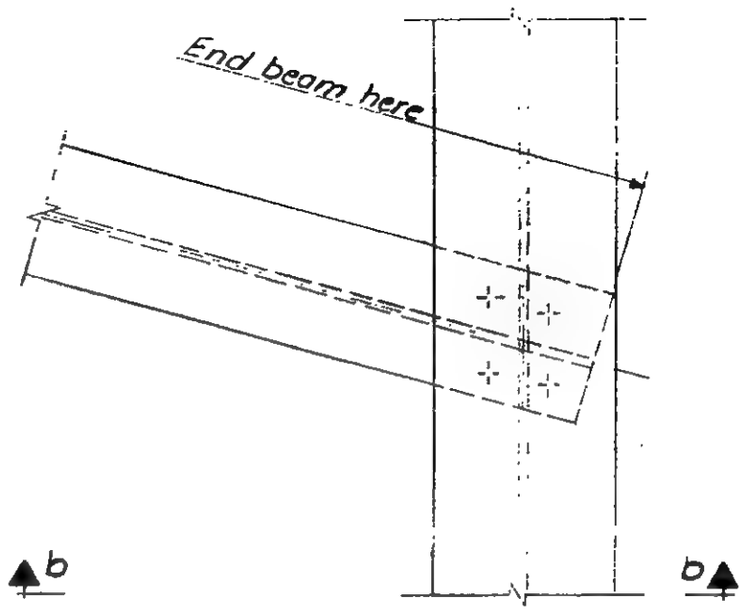

Plan

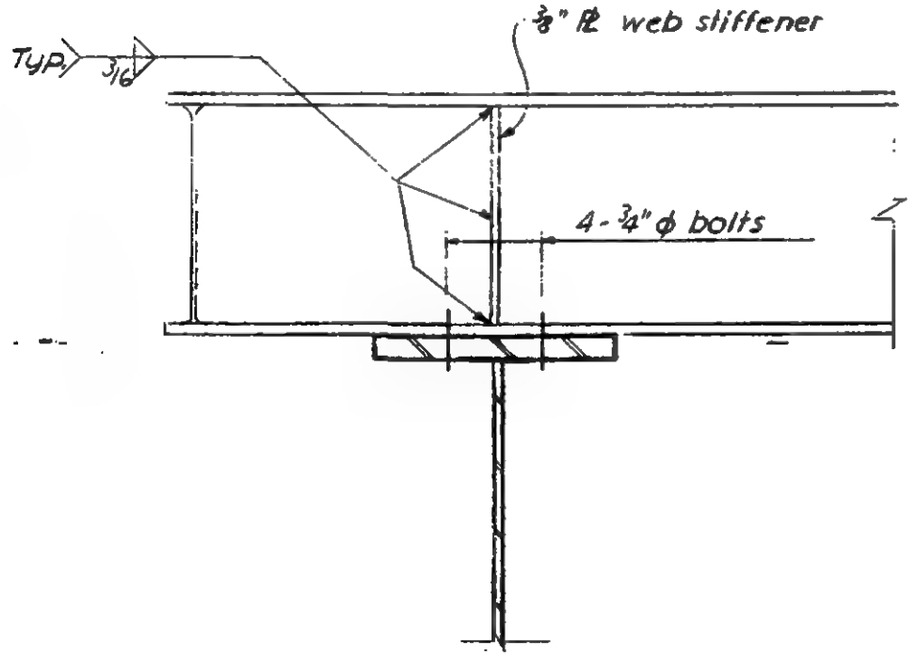

Section a-a

Detail 535 A

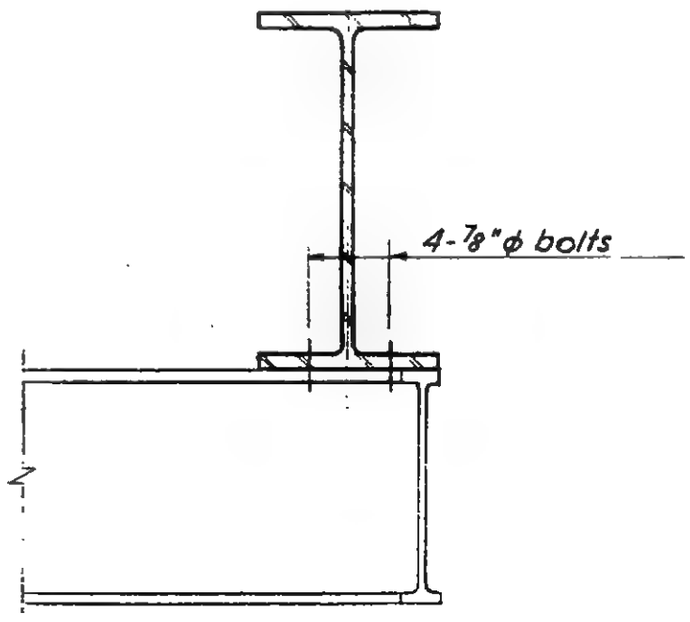

Section b-b

Detail 536 A

LICENSED PROFESSIONAL ENGINEER
LESLIE E. ROBERTSON
No. 34360
UNIVERSITY OF THE STATE OF NEW YORK

6-AB2-177

SKILLING - HELLE - CHRISTIANSEN - ROBERTSON Structural & Civil Engineers

PROJECT THE WORLD TRADE CENTER | TITLE CONNECTION DETAIL 537A | DATE 4-17-68

REVISIONS

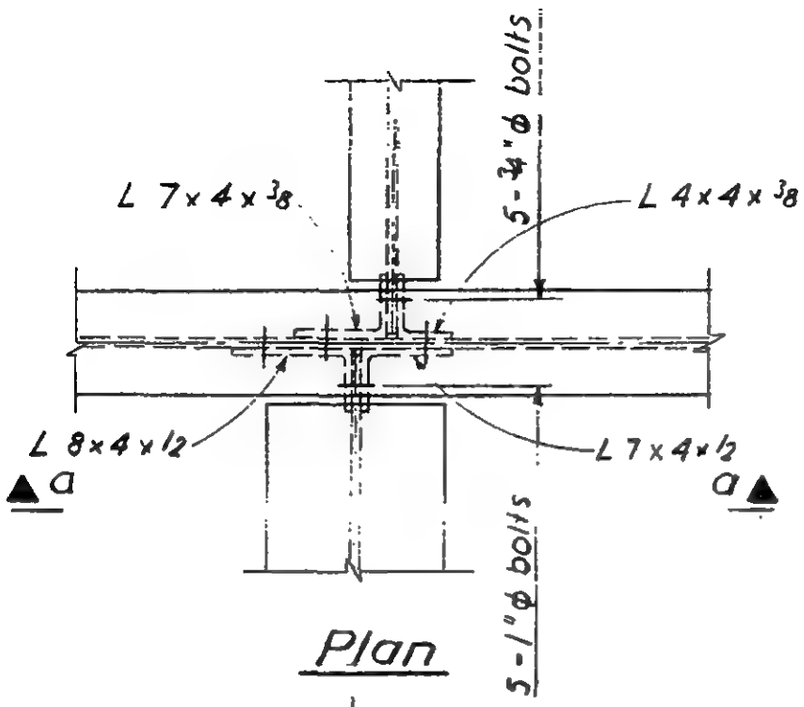

Plan

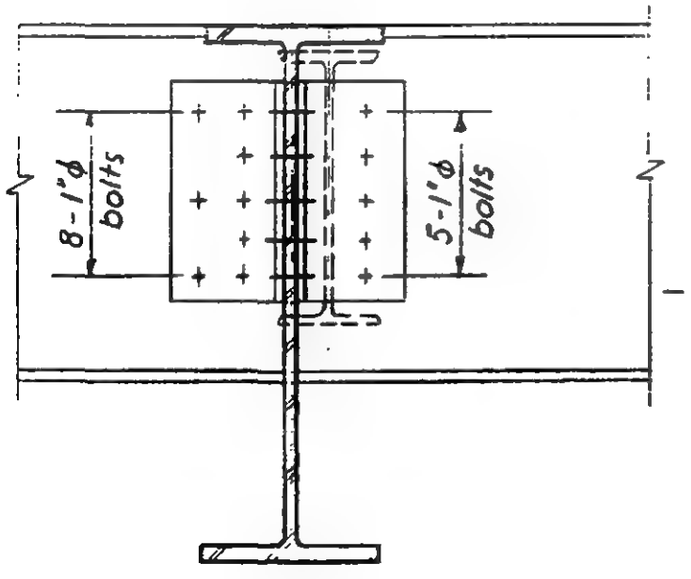

Section a-a

LICENSED PROFESSIONAL ENGINEER
LESLIE E. ROBERTSON
No. 34360
UNIVERSITY OF THE STATE OF NEW YORK

6-AB2-178

SKILLING - HELLE - CHRISTIANSEN - ROBERTSON Structural & Civil Engineers

PROJECT THE WORLD TRADE CENTER | TITLE CONNECTION DETAIL 538 A | DATE 4-17-68

REVISIONS

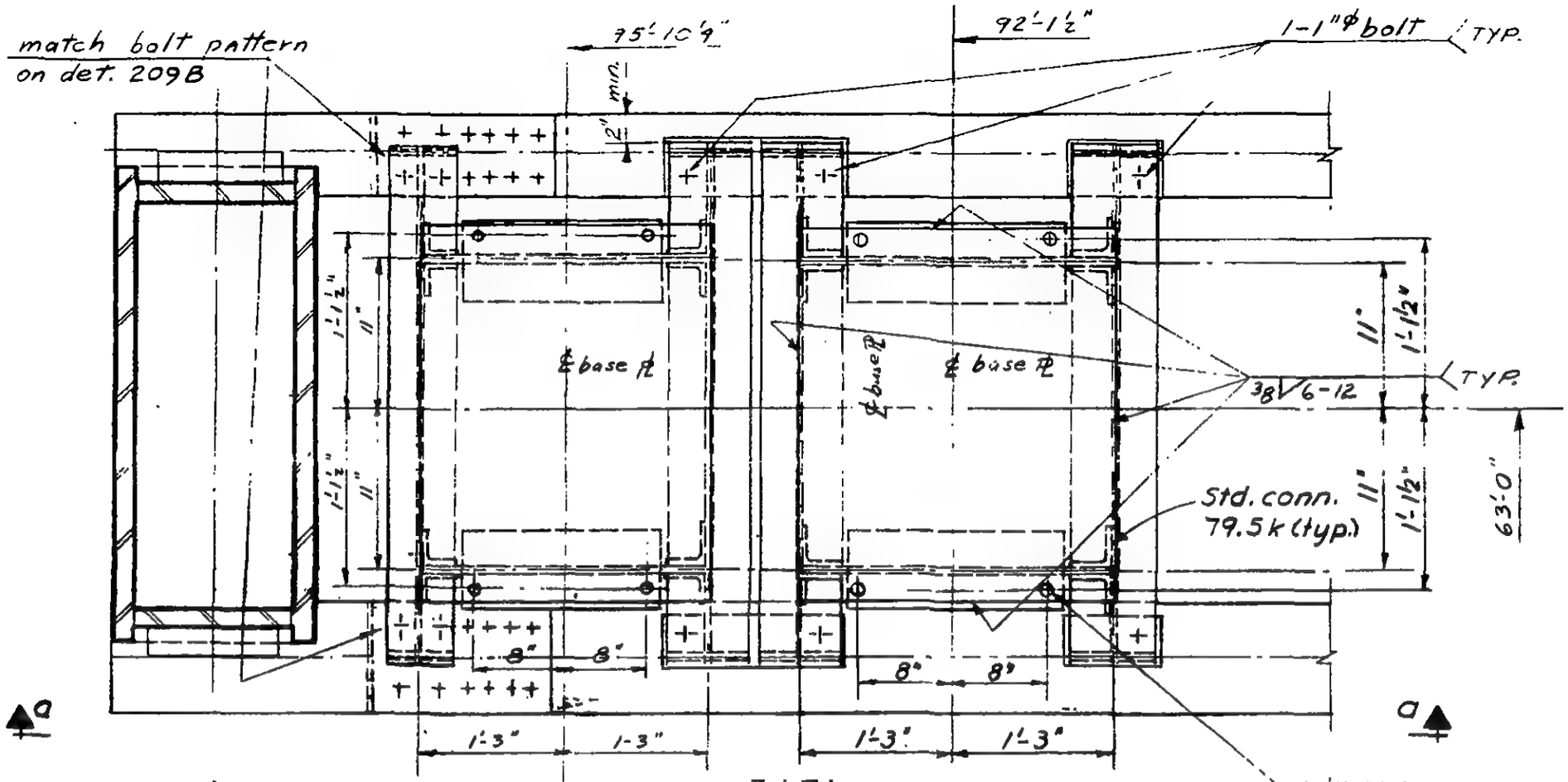

Plan

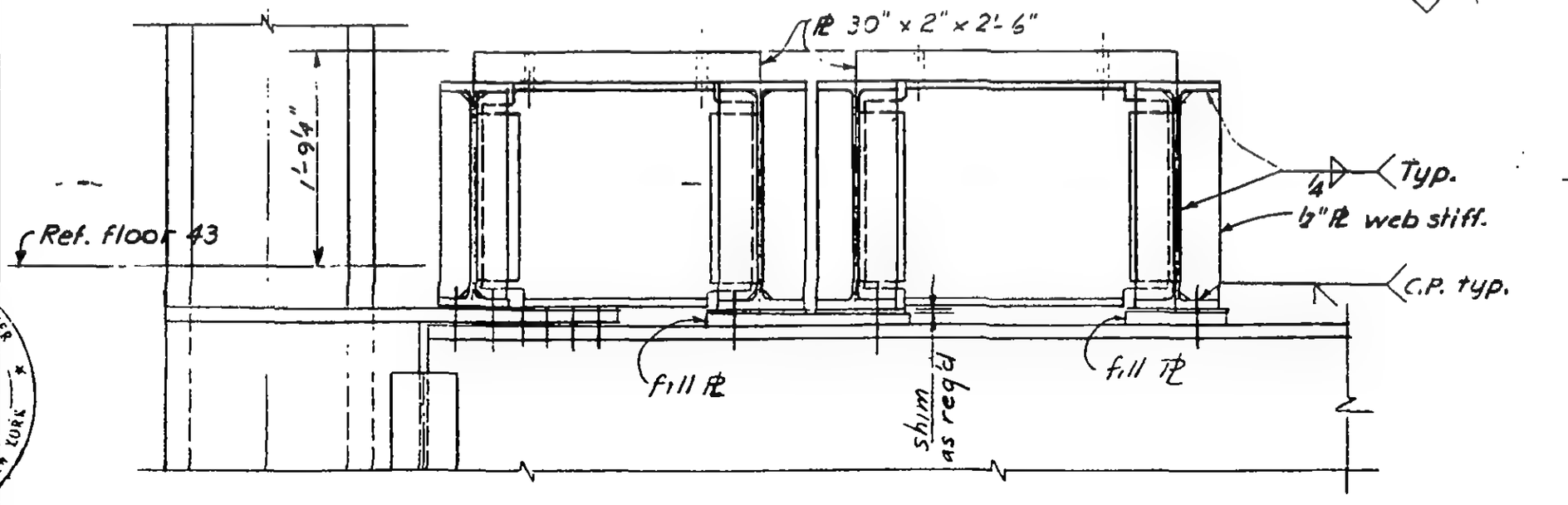

Section a-a

All steel Fy 36.

LICENSED PROFESSIONAL ENGINEER
LESLIE E. ROBERTSON
No. 34360
UNIVERSITY OF THE STATE OF NEW YORK

6-AB2-179

SKILLING, HELLE, CHRISTIANSEN, ROBERTSON — Structural & Civil Engineers

PROJECT THE WORLD TRADE CENTER | TITLE CONNECTION DETAIL 539 | DATE 7-17-68

REVISIONS

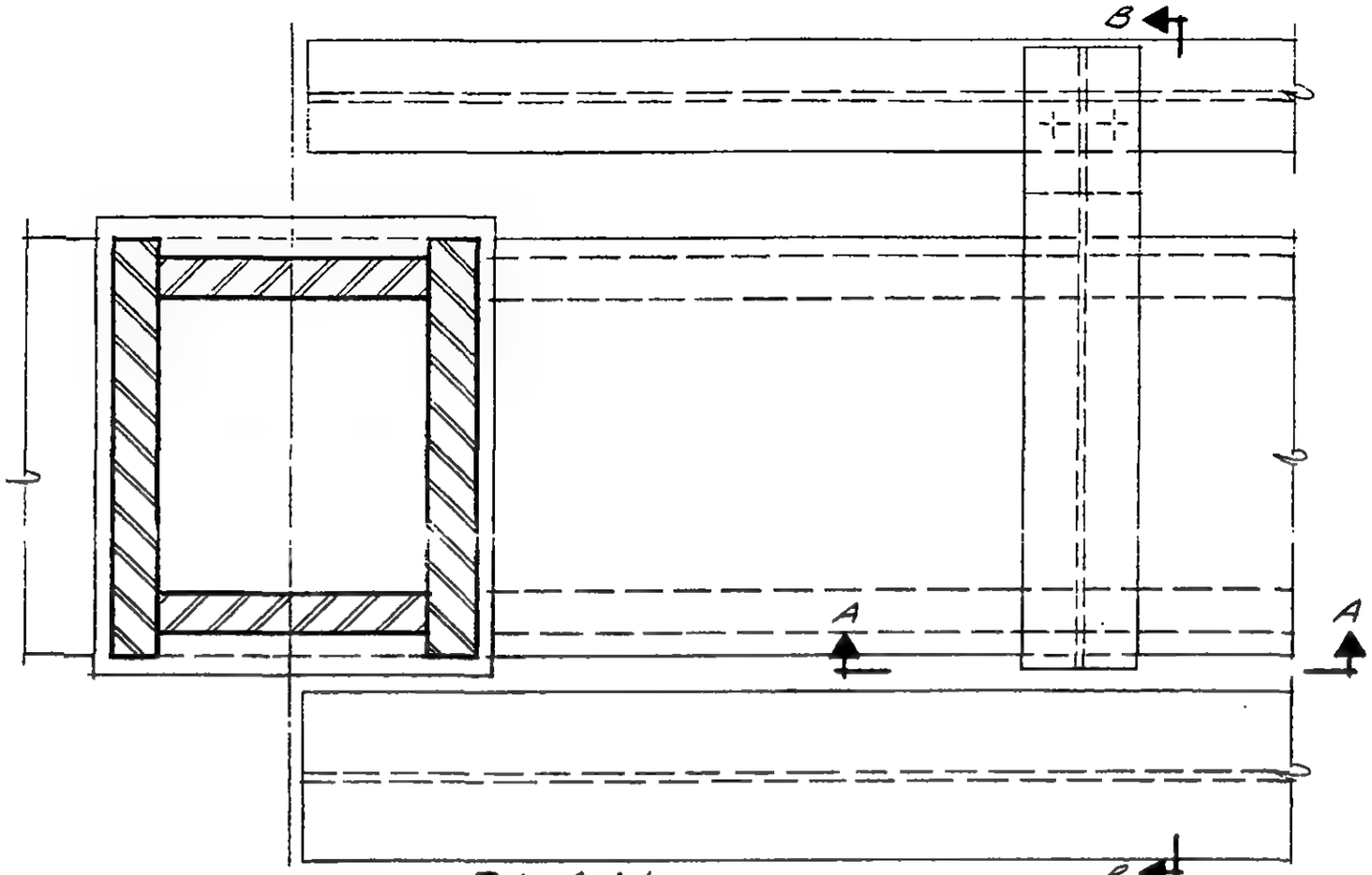

PLAN

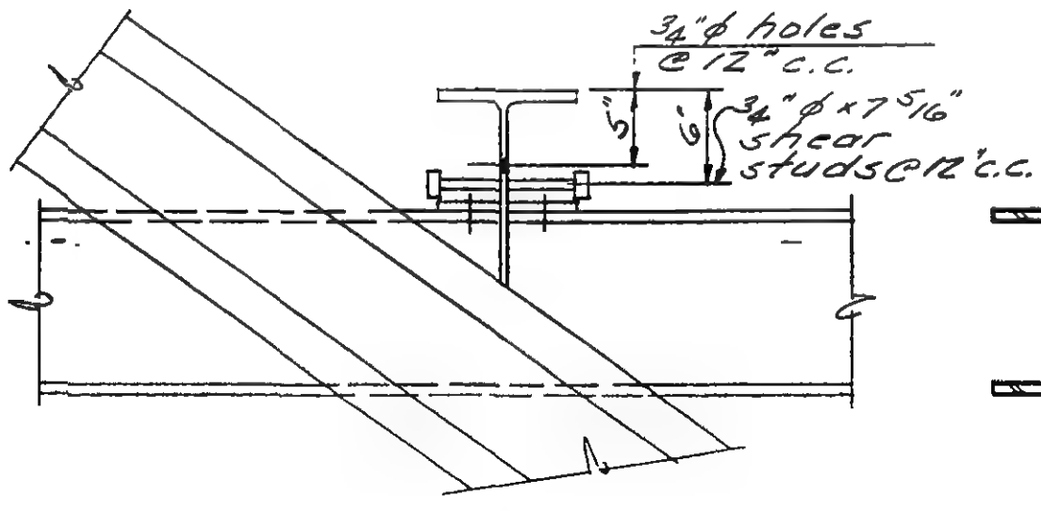

Section a-a

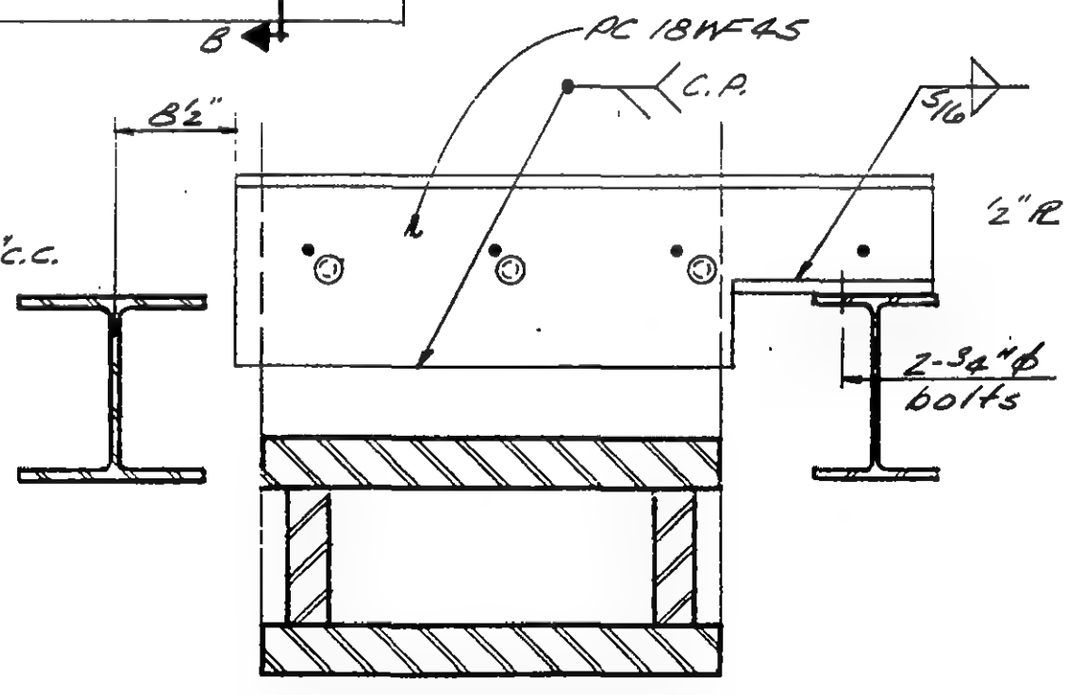

Section b-b

LICENSED PROFESSIONAL ENGINEER — LESLIE E. ROBERTSON — No. 34360 — UNIVERSITY OF THE STATE OF NEW YORK

DESIGNED

DRAWN

REVIEWED

G-A82-180

SKILLING - HELLE - CHRISTIANSEN - ROBERTSON Structural & Civil Engineers

PROJECT THE WORLD TRADE CENTER | TITLE CONNECTION DETAIL 540A, 541A | DATE 1-10-69

REVISIONS

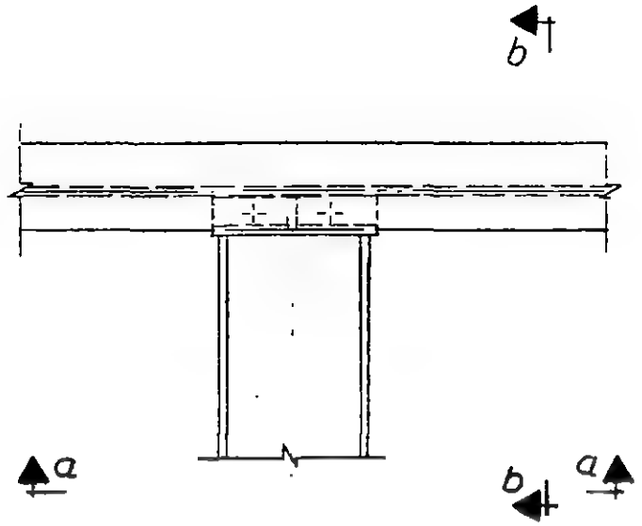

Plan 540A

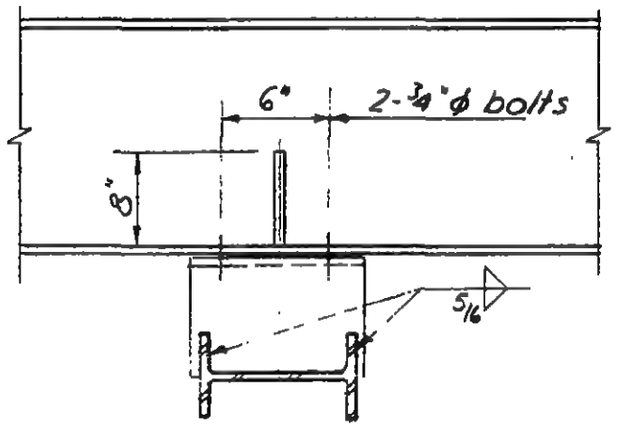

Section a-a

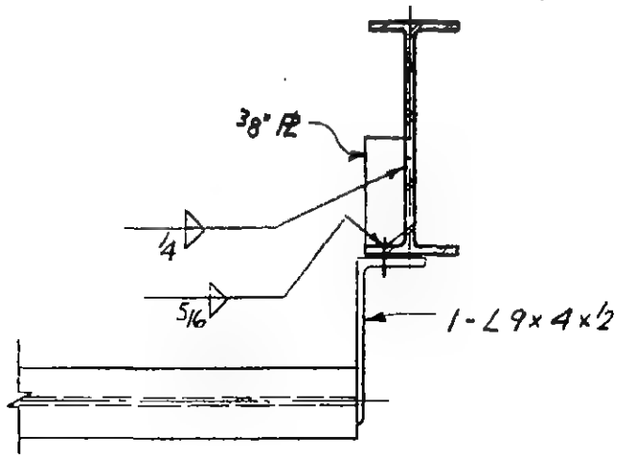

Section b-b

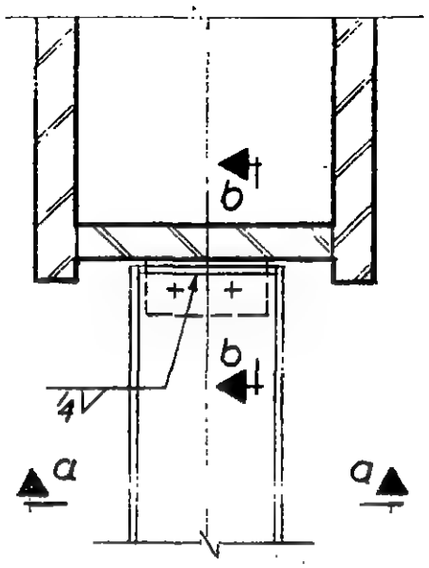

Plan 541A

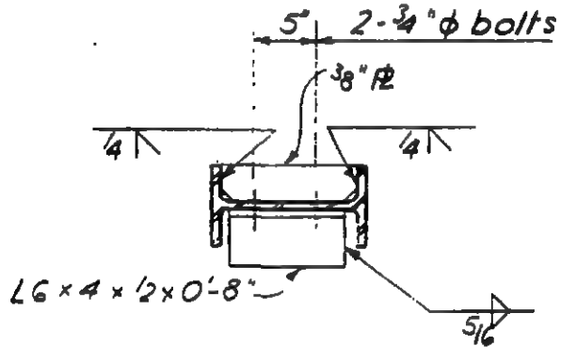

Section a-a

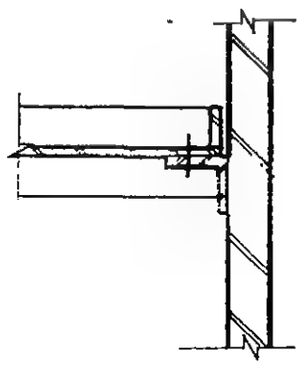

Section b-b

6-AB2-1[illegible]

SKILLING, HELLE, CHRISTIANSEN, ROBERTSON — Structural & Civil Engineers

PROJECT: THE WORLD TRADE CENTER | TITLE: SIDE PLATE ON SPANDREL T206B - DET. 542 | DATE: 7-17-68

REVISIONS

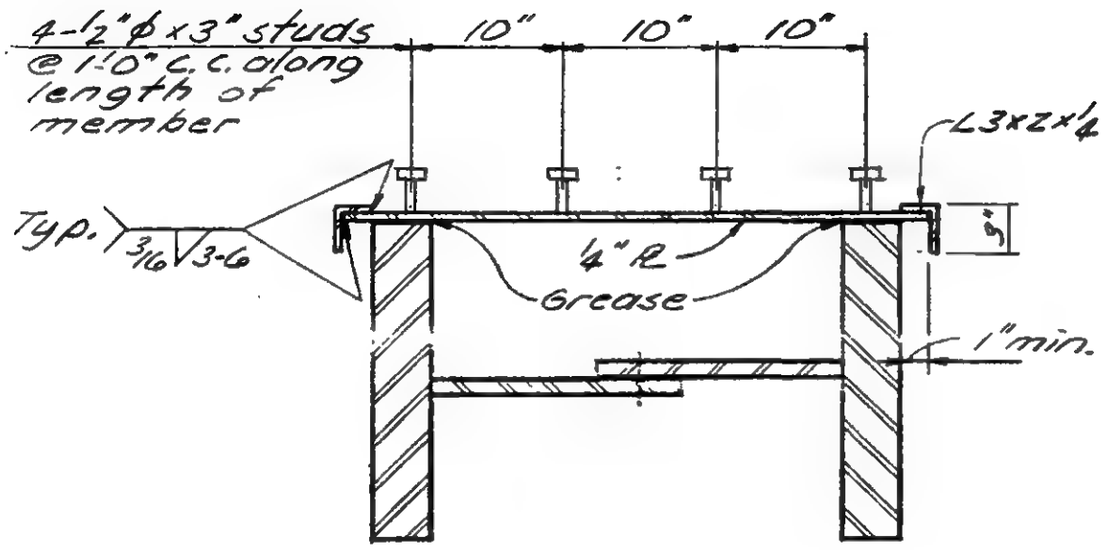

Section a-a

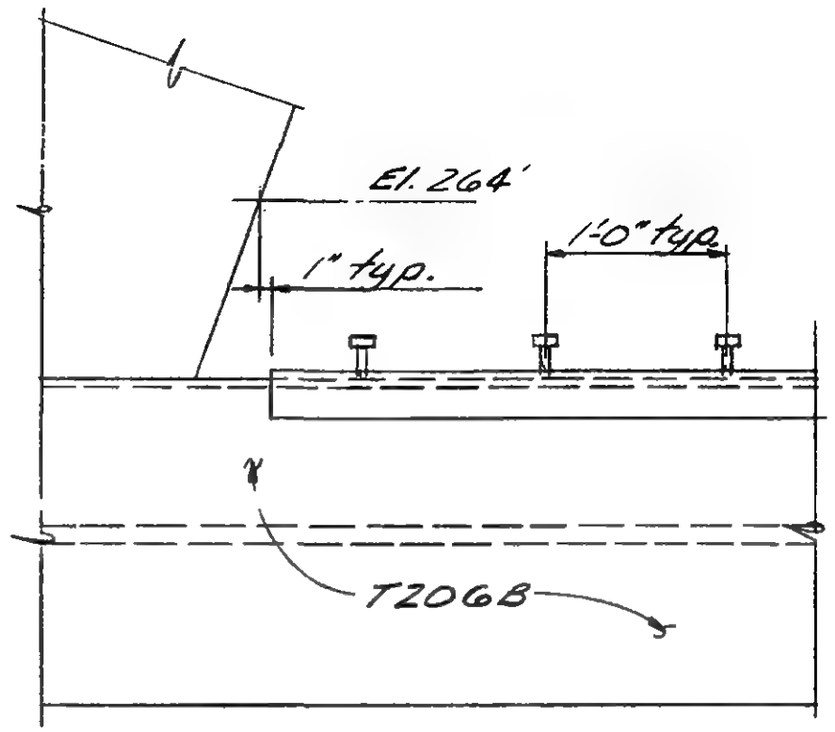

Det. B

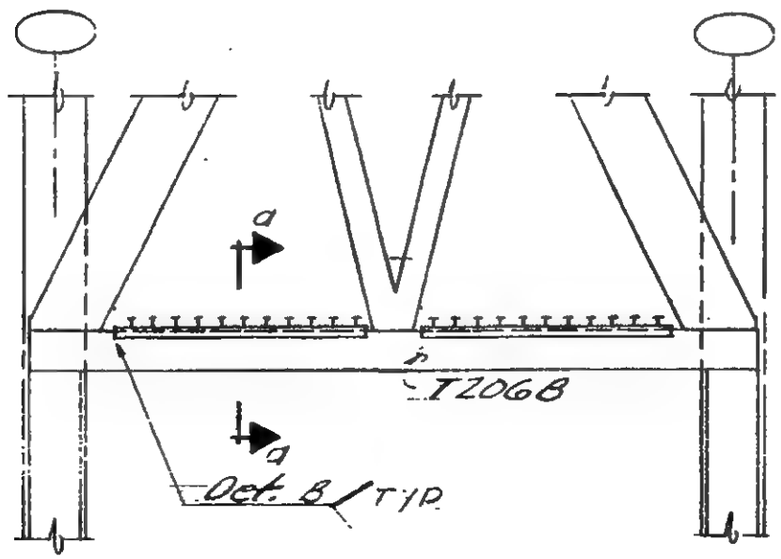

ELEVATION

LICENSED PROFESSIONAL ENGINEER — LESLIE E. ROBERTSON — No. 34360 — UNIVERSITY OF THE STATE OF NEW YORK

DESIGNED

DRAWN

REVIEWED

6-AB2-183

SKILLING, HELLE, CHRISTIANSEN, ROBERTSON — Structural & Civil Engineers

PROJECT THE WORLD TRADE CENTER | TITLE DETAIL 543, 544 | DATE 11-22-68

REVISIONS

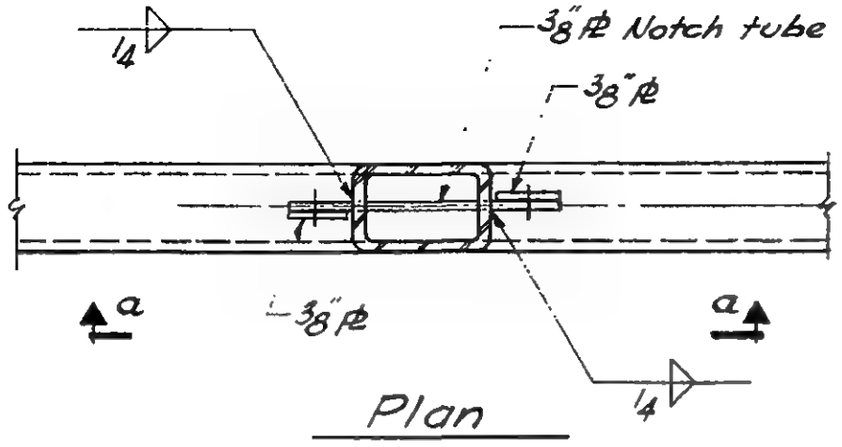

Plan

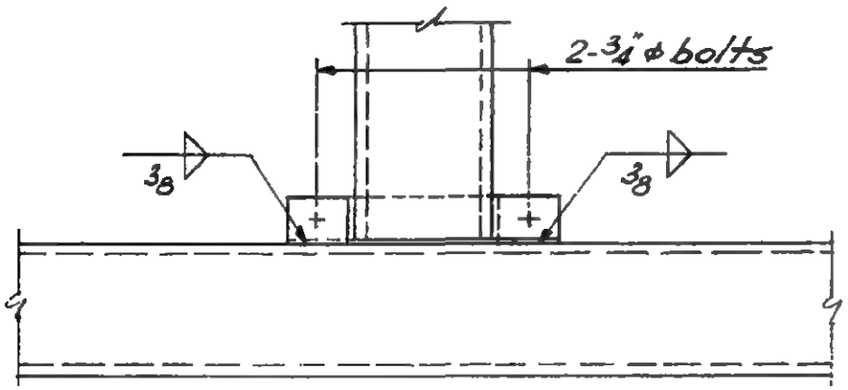

Section a-a

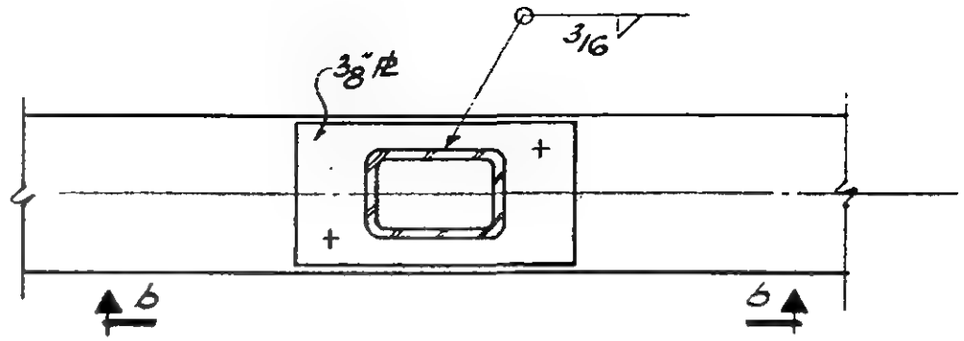

Plan

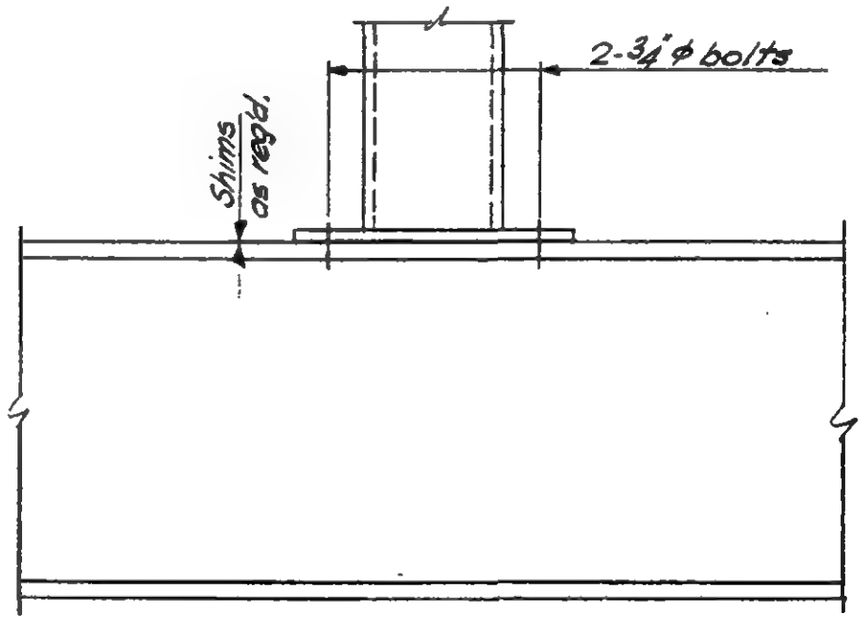

Section b-b

LICENSED PROFESSIONAL ENGINEER
LESLIE E. ROBERTSON
No. 34360
UNIVERSITY OF THE STATE OF NEW YORK

DESIGNED

DRAWN

REVIEWED

DETAIL 543
Connection to tube sections

DETAIL 544
Connection to wf sections

6-AB2-184

WORTHINGTON, SKILLING, HELLE & JACKSON Civil & Structural Engineers

PROJECT THE WORLD TRADE CENTER | TITLE DETAILS 550. 550A, 551, 552 | DATE 8-5-67

REVISIONS

2-9-68

8-29-68

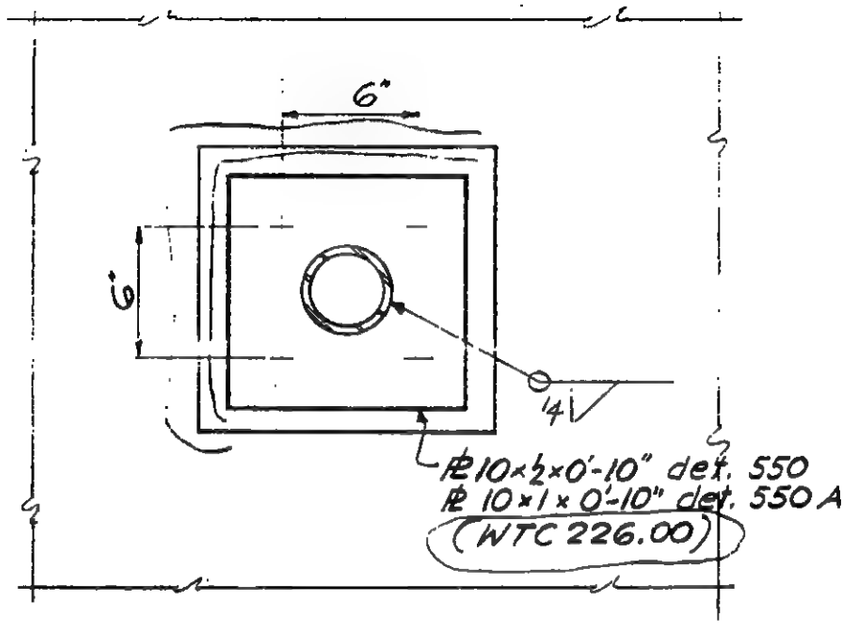

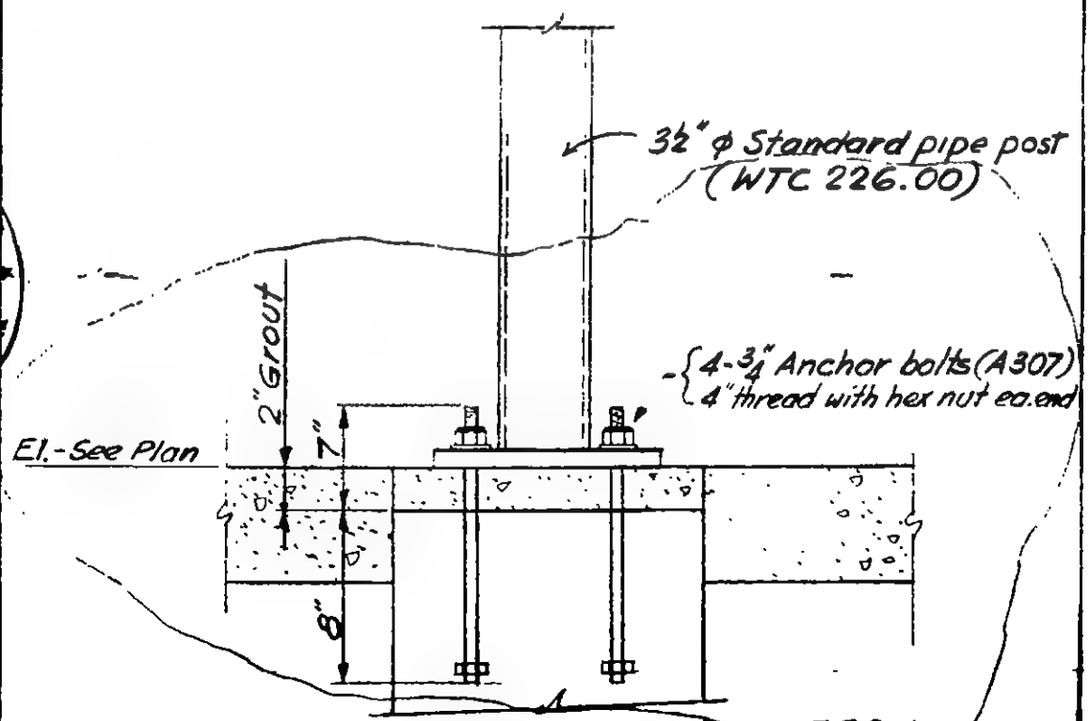

DETAIL 550 & 550A

Note: Detail 552. Deck shelf L to be provided only for posts lying outside of core and @ floors 7, 41, 75 & 108.

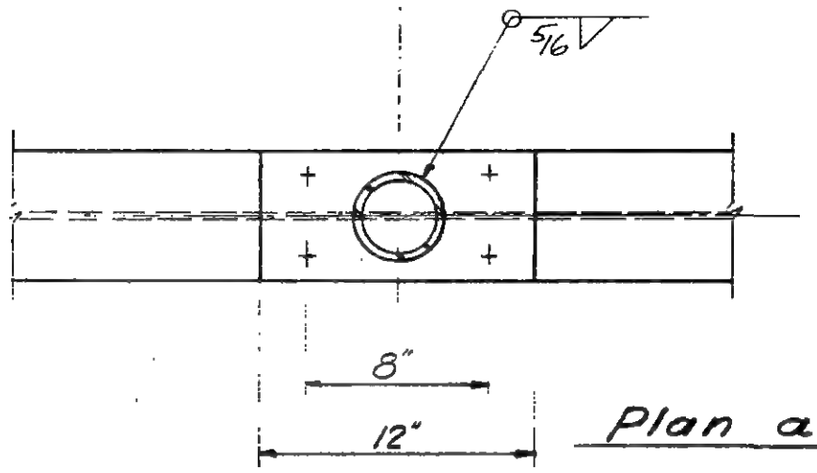

Plan a-a

DETAIL 551 & 552

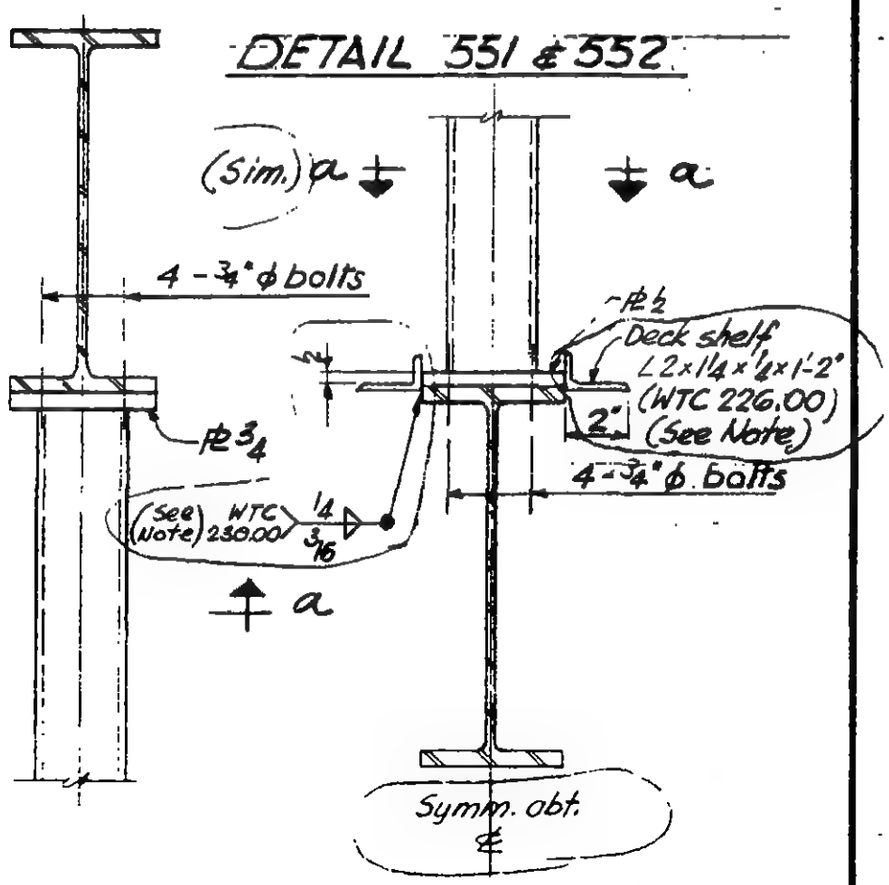

DETAIL 551 (hanger)

DETAIL 552 (Post)

6-AB2-197

SKILLING - HELLE - CHRISTIANSEN - ROBERTSON — Structural & Civil Engineers

PROJECT THE WORLD TRADE CENTER | TITLE CONNECTIONS DETAIL 553, 554, 555 | DATE 10-2-67

REVISIONS

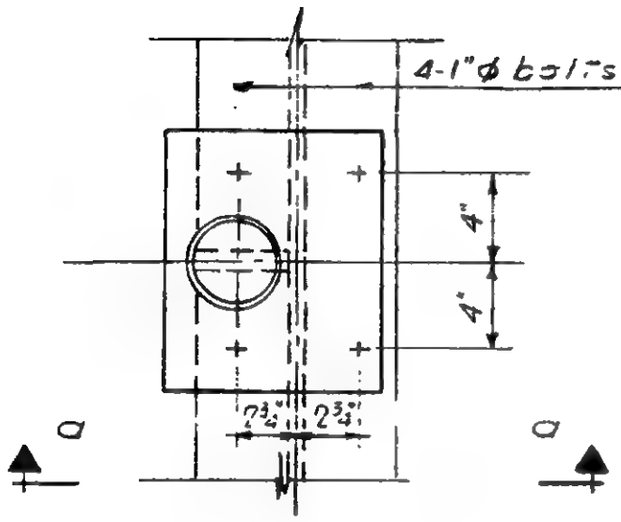

Plan

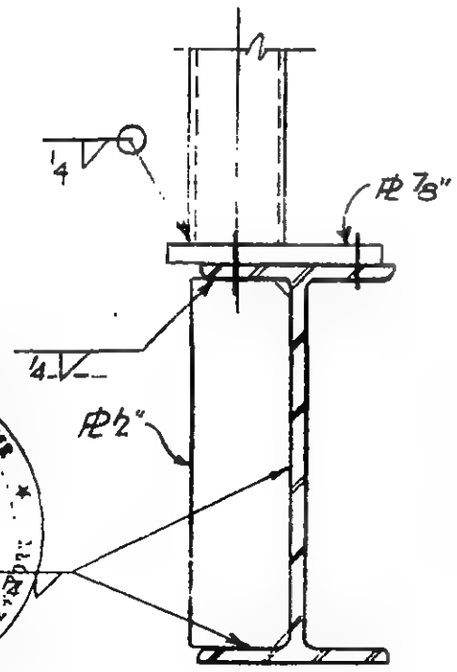

Section a-a

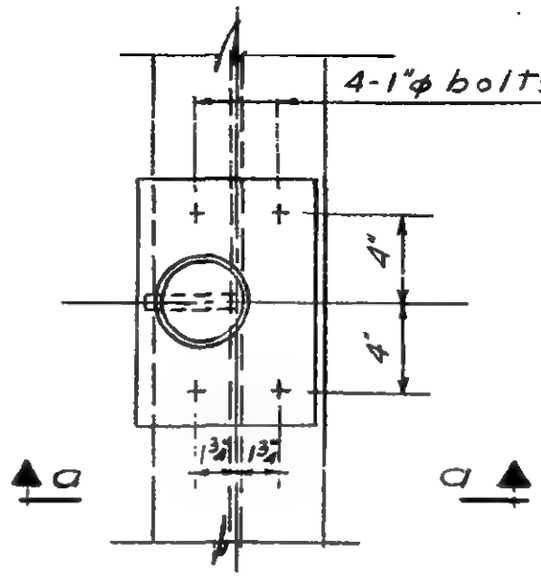

Plan

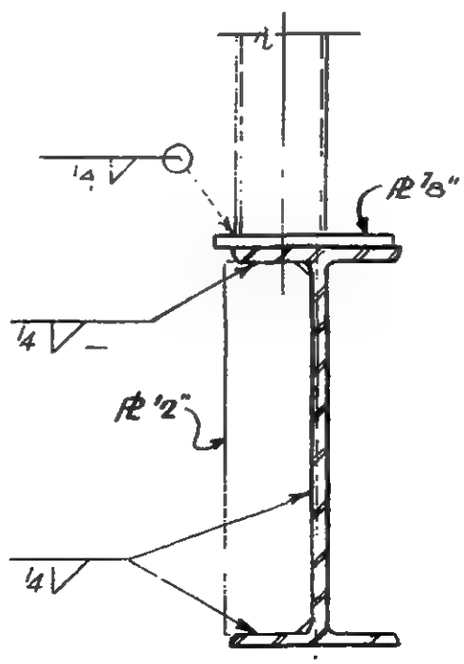

Section a-a

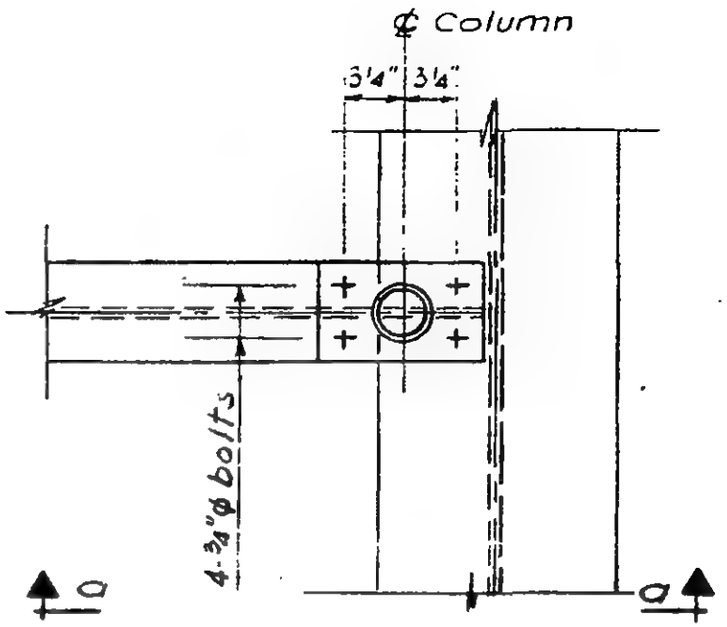

Plan

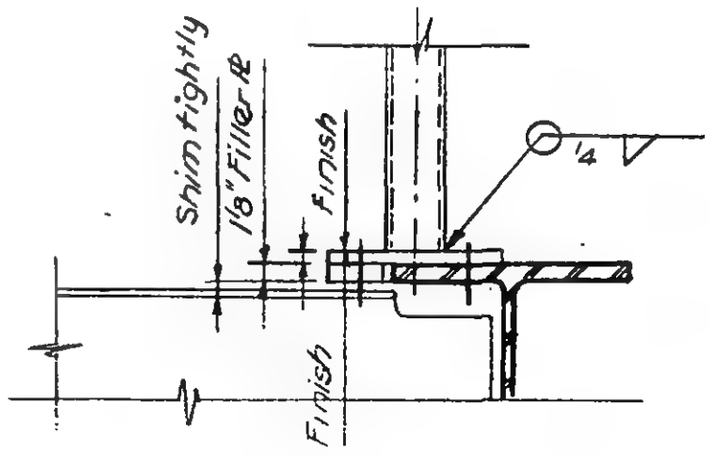

Section a-a

LICENSED PROFESSIONAL ENGINEER
LESLIE E. ROBERTSON
No. 34360
UNIVERSITY OF THE STATE OF NEW YORK

C-AB2-198

SKILLING, HELLE, CHRISTIANSEN, ROBERTSON — Structural & Civil Engineers

PROJECT	TITLE	DATE
THE WORLD TRADE CENTER	HORIZONTAL TRUSSES & BRIDGING - INDEX	4/ 1/69

REVISIONS

nted 5-1-69

6-AB3- 1 GENERAL NOTES & INDEX
6-AB3- 2 HORIZONTAL TRUSSES H1, H2
6-AB3- 3 HORIZONTAL TRUSSES H3, H4
6-AB3- 4 HORIZONTAL TRUSSES H5 - H9, H39, H40
6-AB3- 5 HORIZONTAL TRUSSES H10, H12, H57, H58
6-AB3- 6 HORIZONTAL TRUSSES H14, H15
6-AB3- 7 HORIZONTAL TRUSS DETAILS A & B
6-AB3- 8 HORIZONTAL TRUSS DETAILS C, D & DD
6-AB3- 9 HORIZONTAL TRUSS DETAILS F, G, H, & J
6-AB3-10 HORIZONTAL TRUSS DETAILS K-N, MM & NN
6-AB3-11 HORIZONTAL TRUSS DETAILS P, Q, R, T
6-AB3-11.1 HORIZONTAL TRUSS DETAILS V, W, VV
6-AB3-12 HORIZONTAL TRUSS DETAILS AA, BB, CC,
6-AB3-13 HORIZONTAL TRUSS DETAILS EE, FF
6-AB3-14 HORIZONTAL TRUSSES H20 - H22, H54 - H56
6-AB3-15 HORIZONTAL TRUSSES H23, H24, H52, H53
6-AB3-16 HORIZONTAL TRUSSES H25, H26
6-AB3-17 HORIZONTAL TRUSSES H27, H28, H51
6-AB3-18 HORIZONTAL TRUSSES H30, H34 - H37
6-AB3-19 HORIZONTAL TRUSSES H32, H33
6-AB3-20 HORIZONTAL TRUSSES H38
6-AB3-20.1 HORIZONTAL TRUSSES H31
6-AB3-21 HORIZONTAL TRUSS DETAILS HH, JJ, KK, LL, KKK, LLL
6-AB3-22 HORIZONTAL TRUSS DETAILS PP, QQ
6-AB3-23 HORIZONTAL TRUSS DETAILS RR, SS
6-AB3-24 HORIZONTAL TRUSS DETAILS TT
6-AB3-25 HORIZONTAL TRUSS DETAILS UU, WW
6-AB3-30 BRIDGING TYPE B1 THRU B4
6-AB3-31 BRIDGING TYPE B5 THRU B8
6-AB3-32 BRIDGING TYPE B9 THRU B12
6-AB3-33 BRIDGING DETAILS X, Y, Z, YY
6-AB3-34 HORIZONTAL TRUSSES H11, H13
6-AB3-35 HORIZONTAL TRUSSES H16, H17
6-AB3-36 HORIZONTAL TRUSSES H18, H19
6-AB3-37 HORIZONTAL TRUSSES H40, H41
6-AB3-38 HORIZONTAL TRUSS DETAILS A1, B1, C1

GENERAL NOTES.

1. ALL MATERIAL AND LABOR CONTRACT WTC 226.00 EXCEPT AS NOTED.
2. FOR EXTERIOR WALL COLUMNS, SPANDRELS AND SEATS SEE DRAWING BOOK 2 (FLOORS 7 & 9) WTC 213.00 AND DRAWING BOOK 4 (FLOORS 10 TO 110) WTC 214.00.

85

WORTHINGTON, SKILLING, HELLE & JACKSON — Civil & Structural Engineers

PROJECT: THE WORLD TRADE CENTER | TITLE: HORIZONTAL TRUSSES H1 & H2 | DATE: 12-20-67

REVISIONS

8-29-68

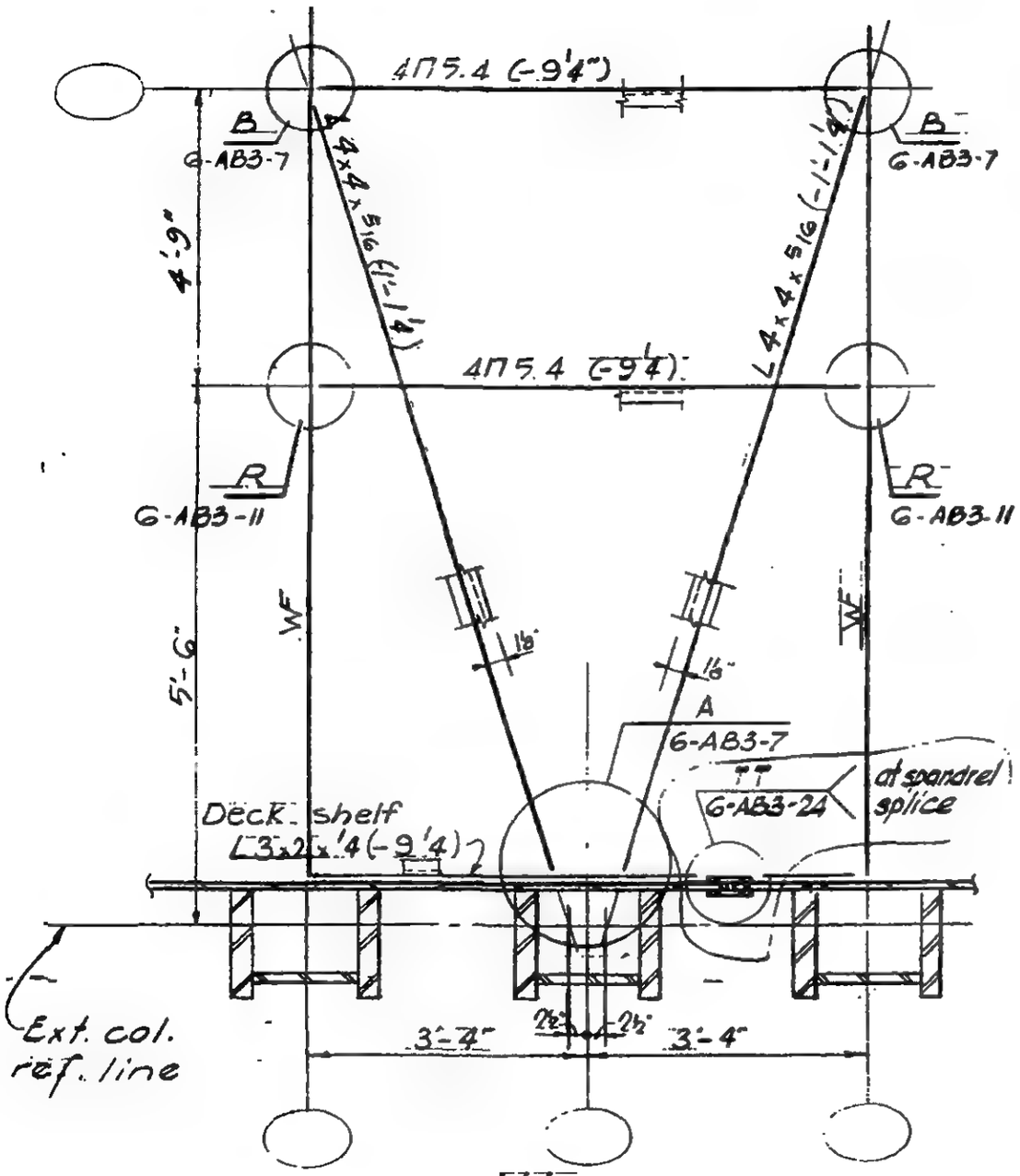

H1

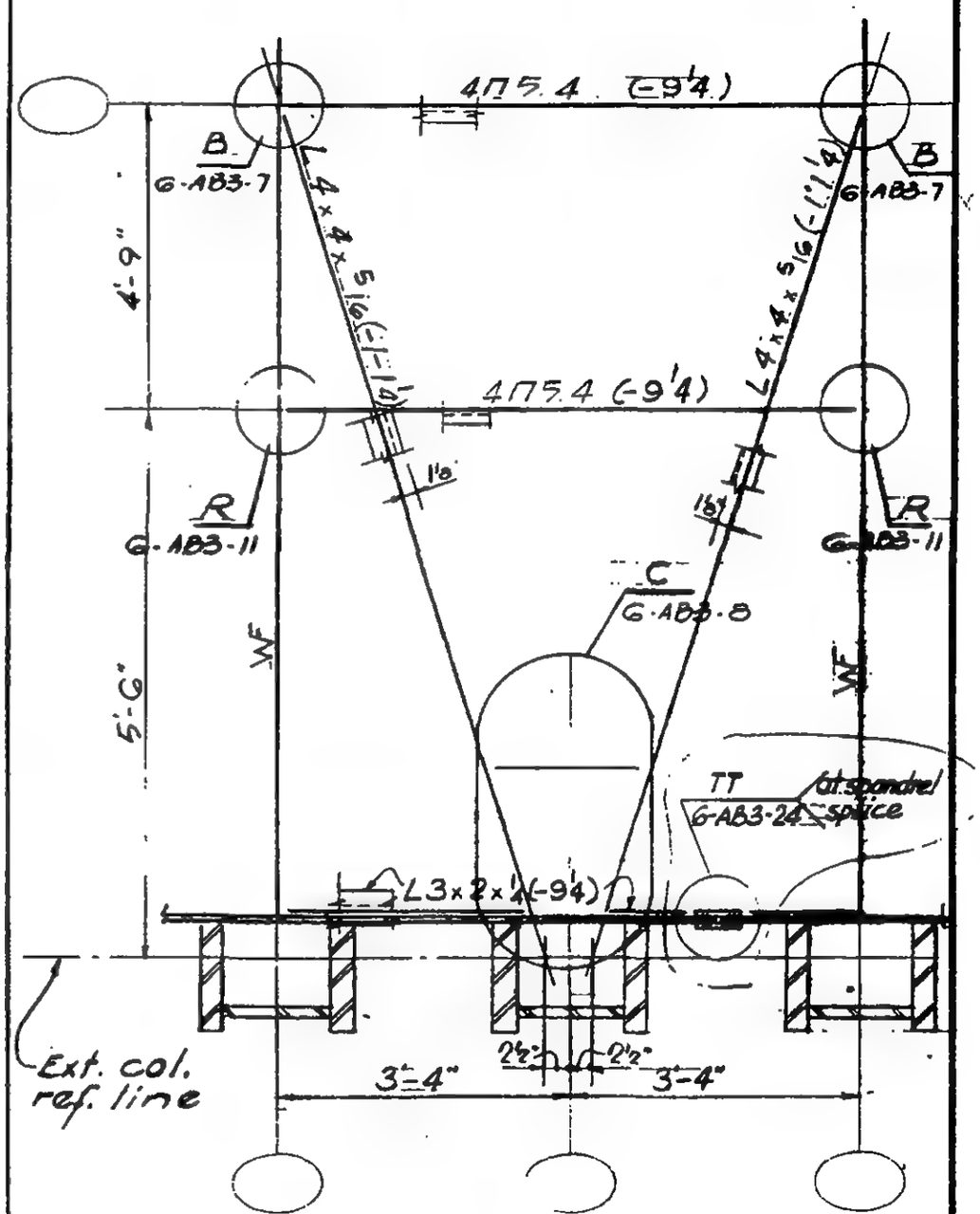

H2

LICENSED PROFESSIONAL ENGINEER
LESLIE E. ROBERTSON
No. 34360
THE STATE OF NEW YORK

6-AB3-2

SKILLING - HELLE - CHRISTIANSEN - ROBERTSON Structural & Civil Engineers

PROJECT THE WORLD TRADE CENTER | TITLE HORIZONTAL TRUSSES H3 & H4 | DATE 12-20-67

REVISIONS

8-29-68

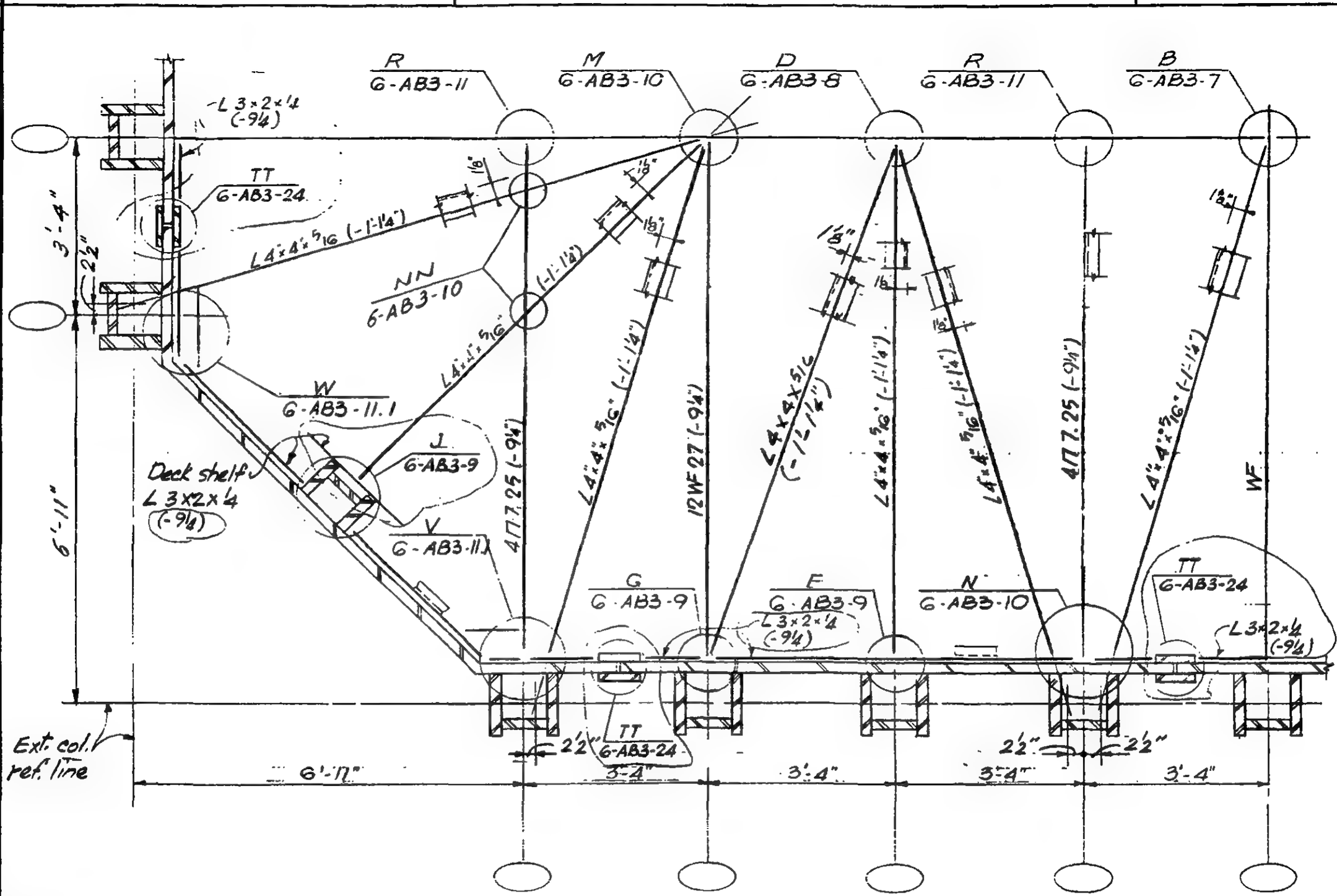

H3

H4 opp. hand

LICENSED PROFESSIONAL ENGINEER
LESLIE E. ROBERTSON
ENG. 34360
STATE OF NEW YORK

6-AB3-3

WORTHINGTON, SKILLING, HELLE & JACKSON — Civil & Structural Engineers

PROJECT: THE WORLD TRADE CENTER | TITLE: HORIZONTAL TRUSSES H5 TO H9, H39 & H40 | DATE: 12-20-67

REVISIONS

1-24-68
8-29-68

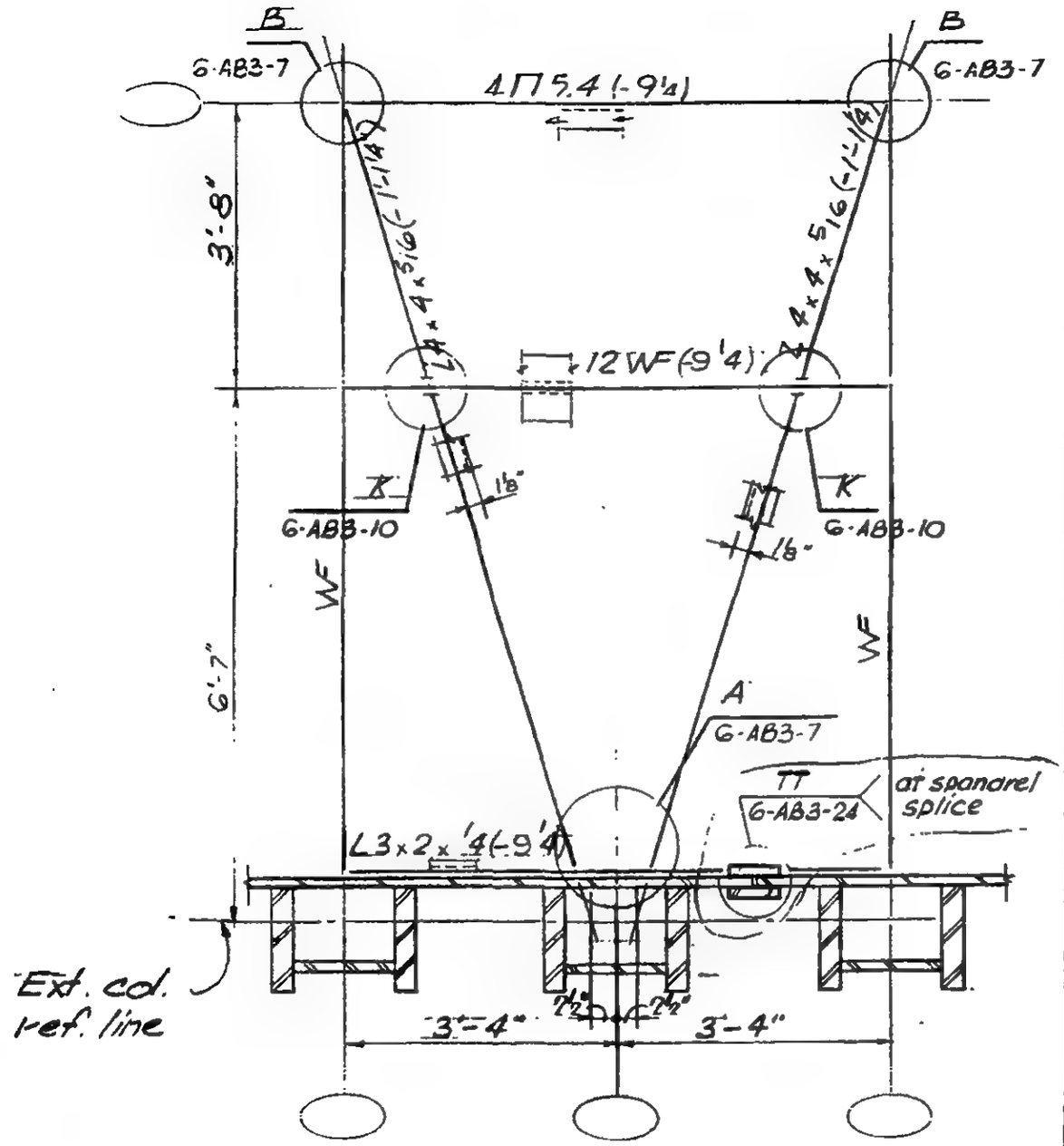

H5

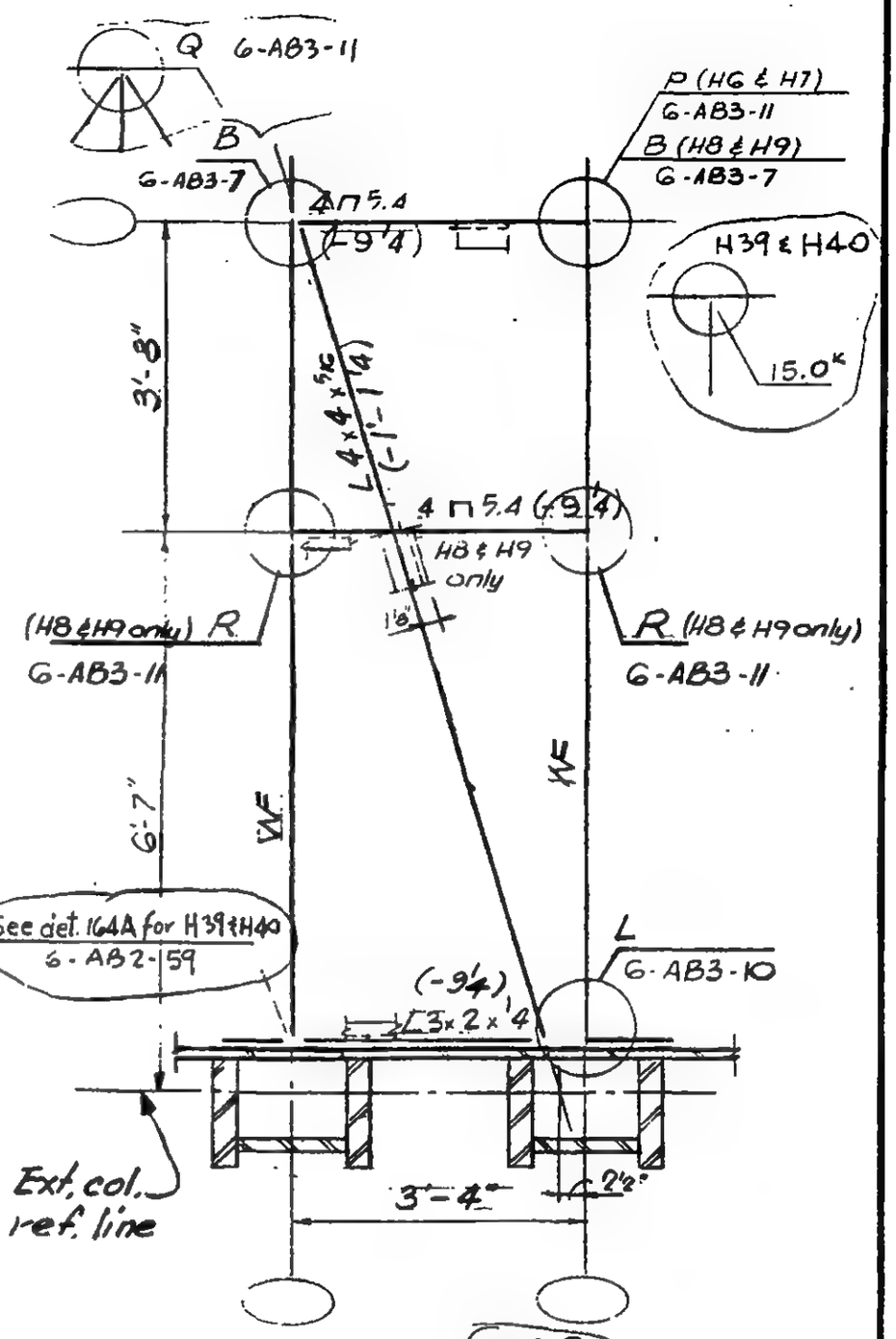

H6, H8, H39
H7, H9, H40 Opp. hand

LICENSED PROFESSIONAL ENGINEER — LESLIE E. ROBERTSON — No. 34960 — UNIVERSITY OF THE STATE OF NEW YORK

G-AB3-4

WORTHINGTON, SKILLING, HELLE & JACKSON — Civil & Structural Engineers

PROJECT: THE WORLD TRADE CENTER | TITLE: HORIZONTAL TRUSSES H10, H12, H57, H58 | DATE: 12-20-67

REVISIONS

1-24-68

8-29-68

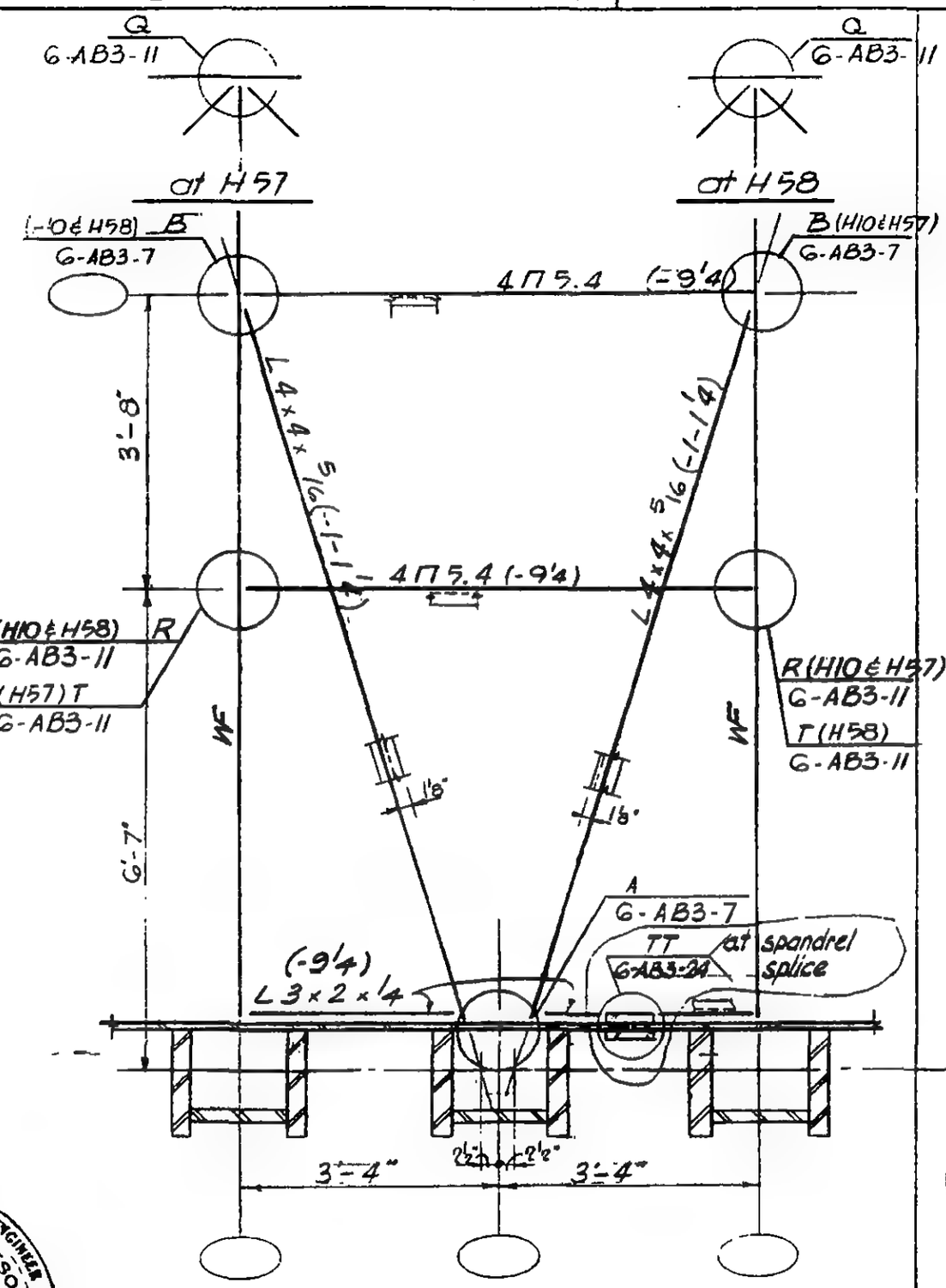

H10

H57 as noted

H58 as noted

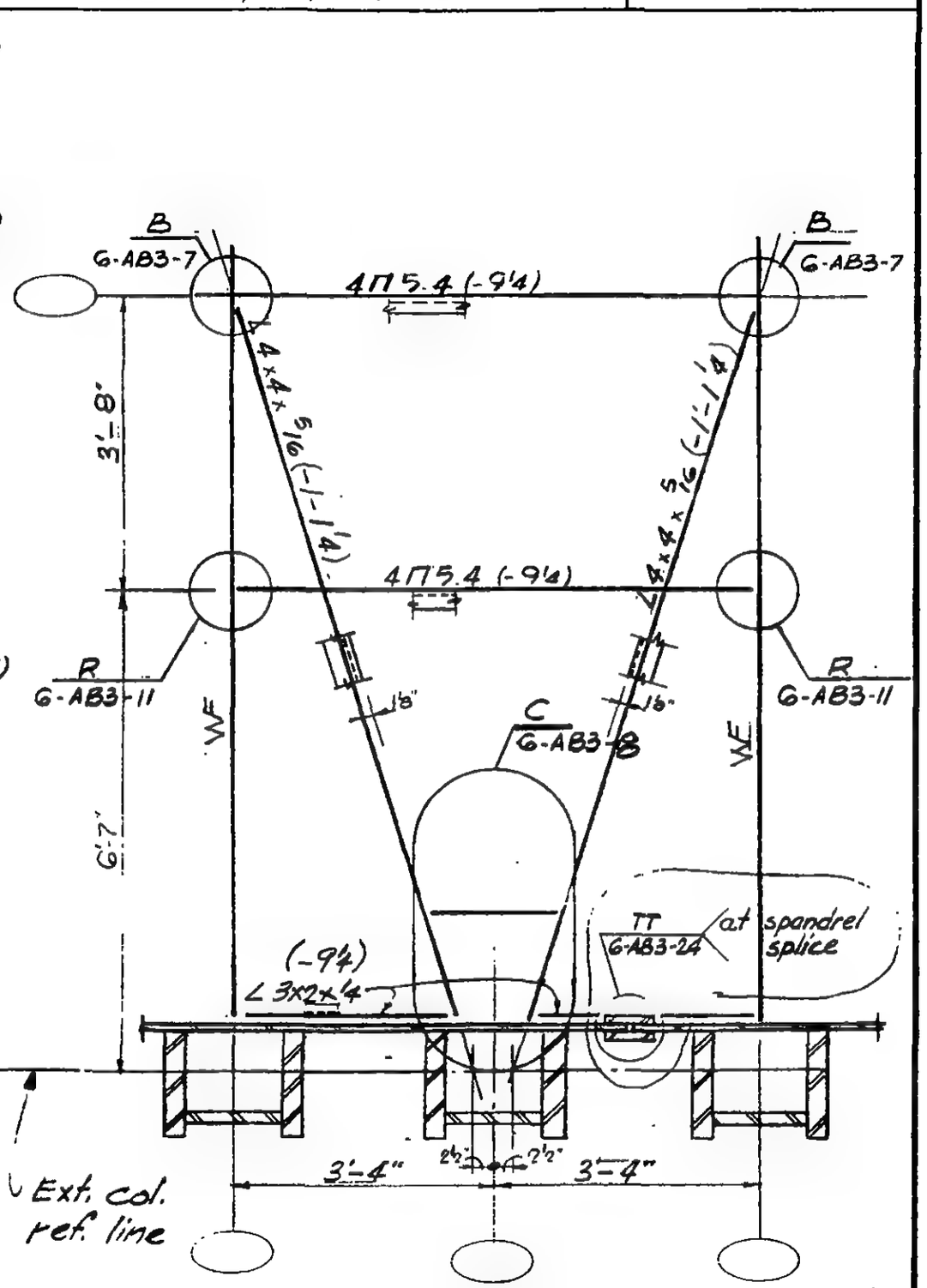

H12

LICENSED PROFESSIONAL ENGINEER
LESLIE E. ROBERTSON
No. 34360
UNIVERSITY OF THE STATE OF NEW YORK

SKILLING - HELLE - CHRISTIANSEN - ROBERTSON Structural & Civil Engineers

PROJECT THE WORLD TRADE CENTER | TITLE HORIZONTAL TRUSSES H14 & H15 | DATE 12-20-67

REVISIONS

8-29-68

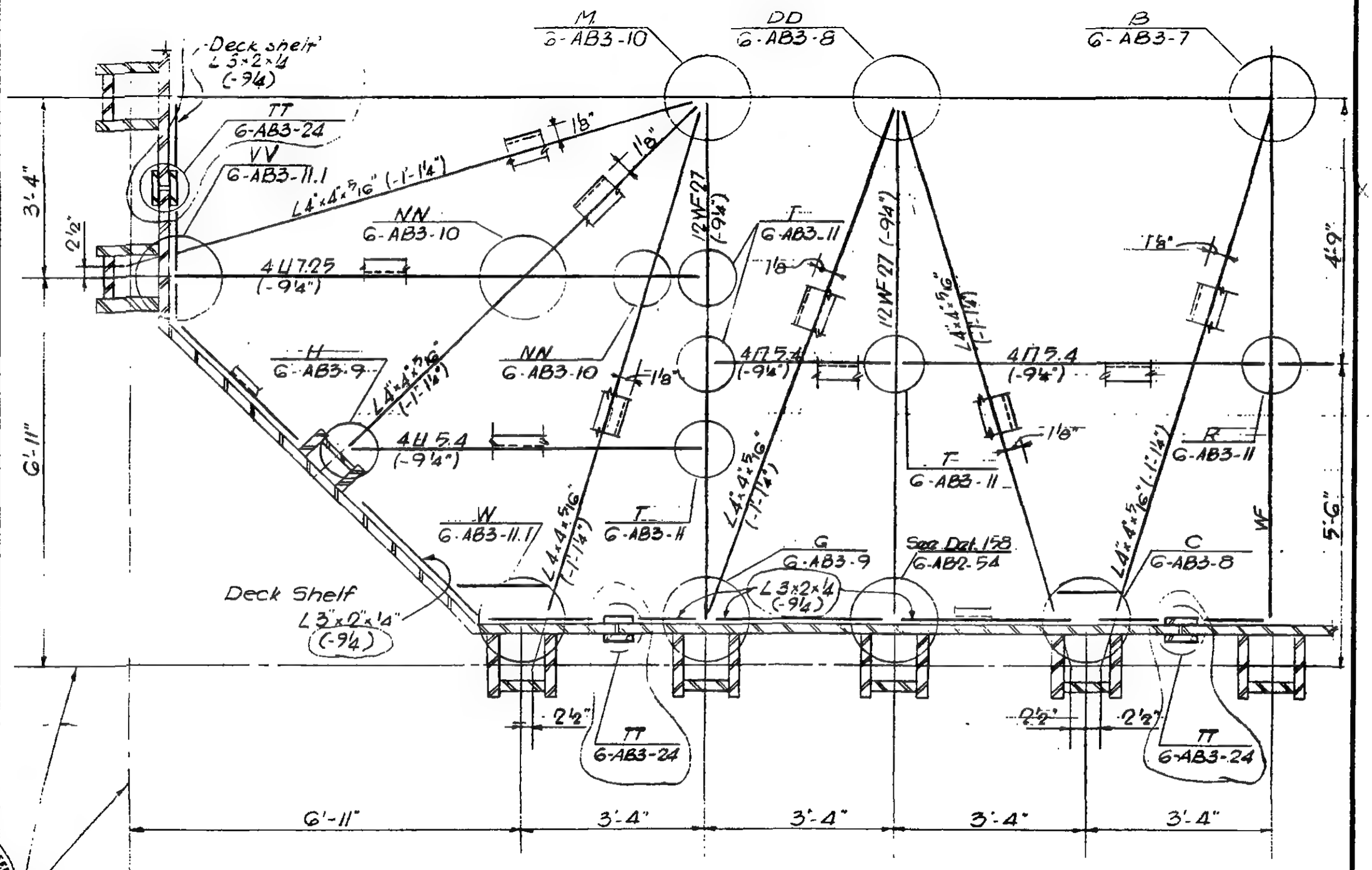

H14
H15 opp. hand

6-AB3-6

WORTHINGTON, SKILLING, HELLE & JACKSON — Civil & Structural Engineers

PROJECT: THE WORLD TRADE CENTER | TITLE: HORIZONTAL TRUSS - DETAILS A & B | DATE: 12-20-67

REVISIONS

Note 1: See approved steel deck shop drawings for locations where this dim. is 7 3/4".

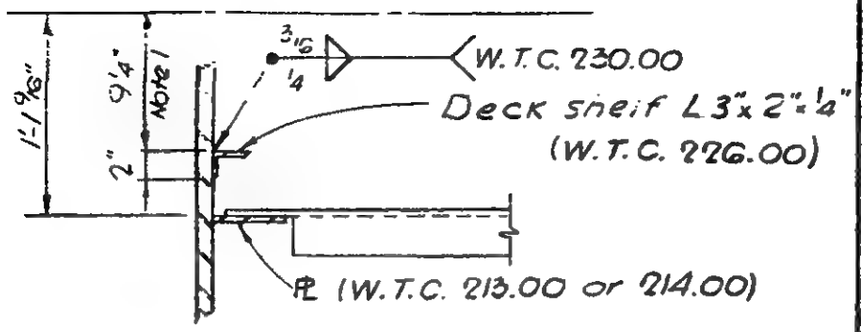

SECTION a-a

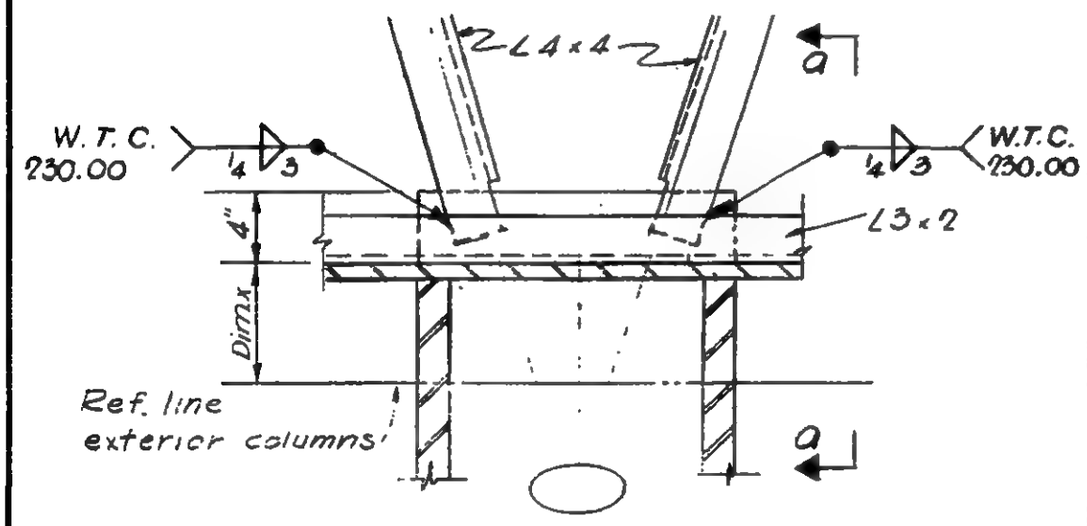

Detail A

Floor	Dim. X
9	7 7/8"
41 & 43	7 7/16"
75 & 77	7 1/16"
107	6 7/8"

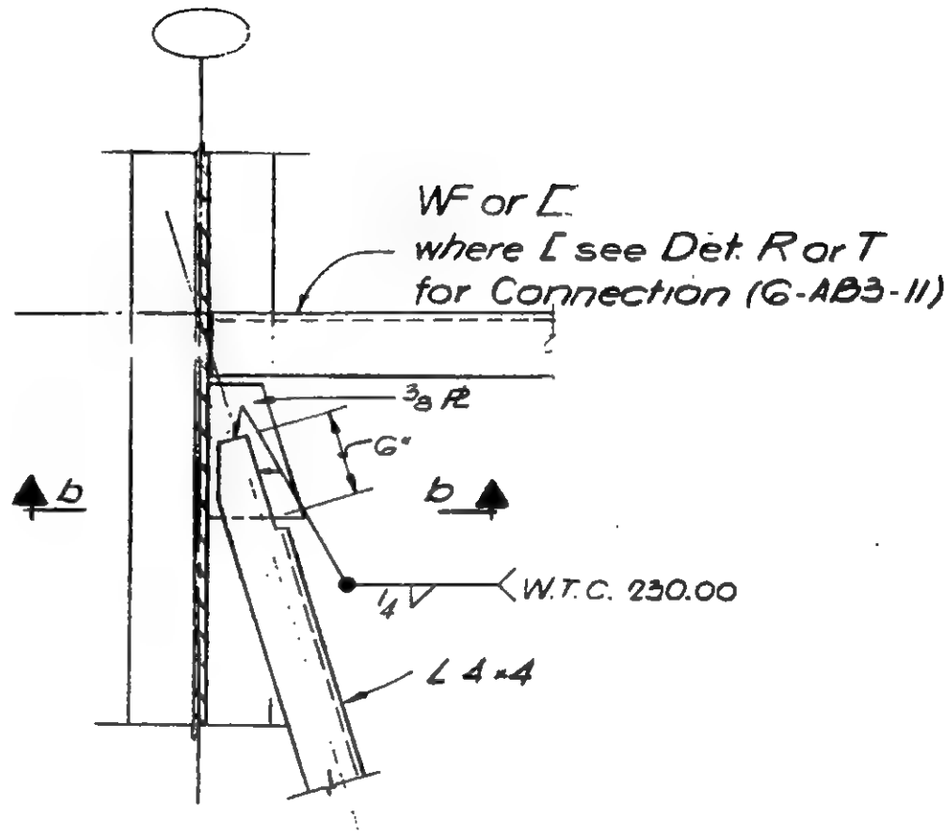

Detail B

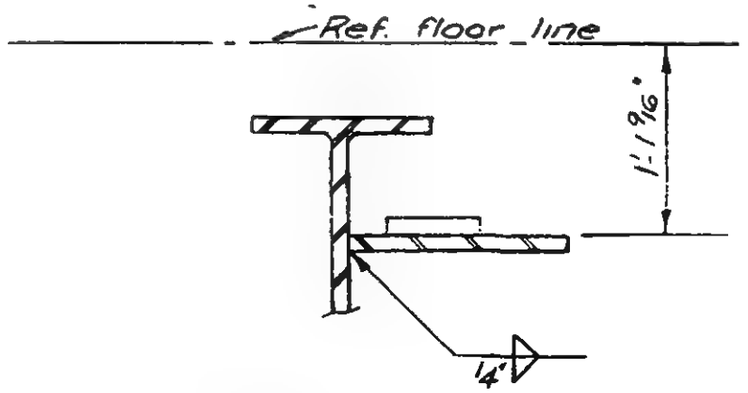

Section b-b

6-AB3-7

LICENSED PROFESSIONAL ENGINEER LESLIE E. ROBERTSON No. 31650 STATE OF NEW YORK

SKILLING - HELLE - CHRISTIANSEN - ROBERTSON Structural & Civil Engineers

PROJECT THE WORLD TRADE CENTER | TITLE HORIZONTAL TRUSS - DETAILS C, D & DD | DATE 12-20-67

REVISIONS

8-29-68

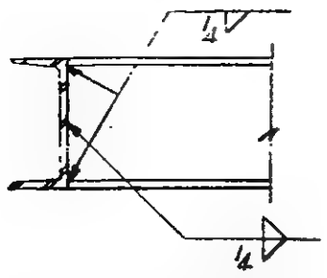

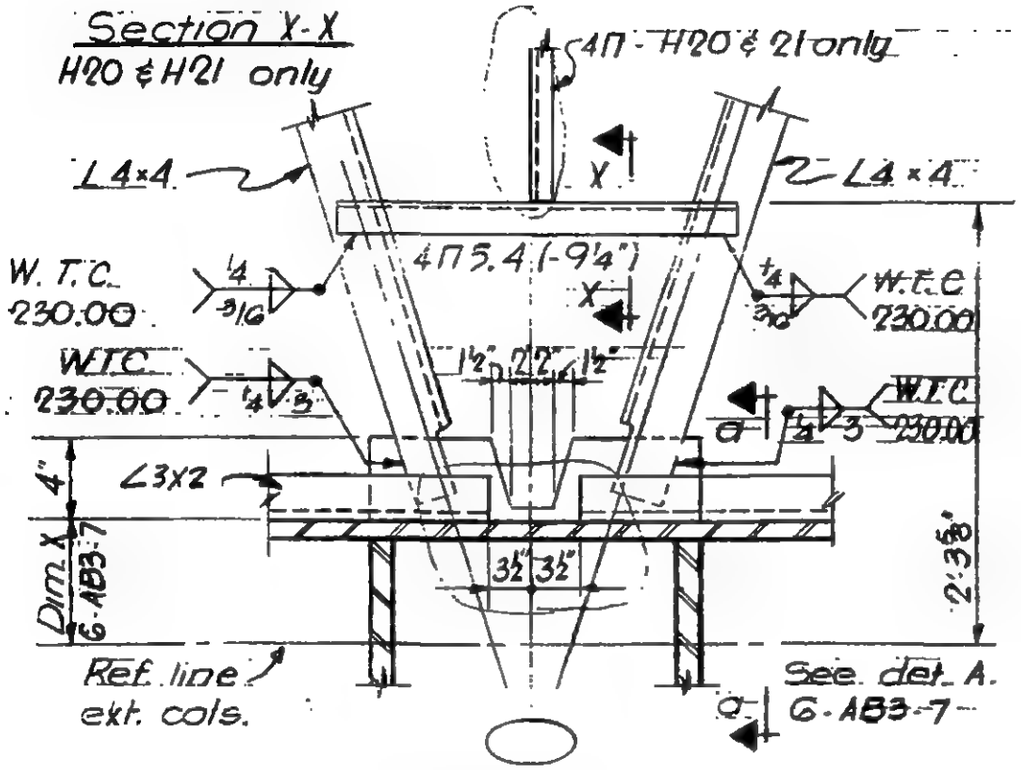

Detail C

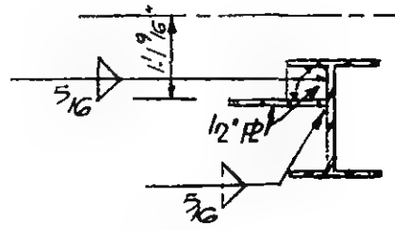

Section y-y

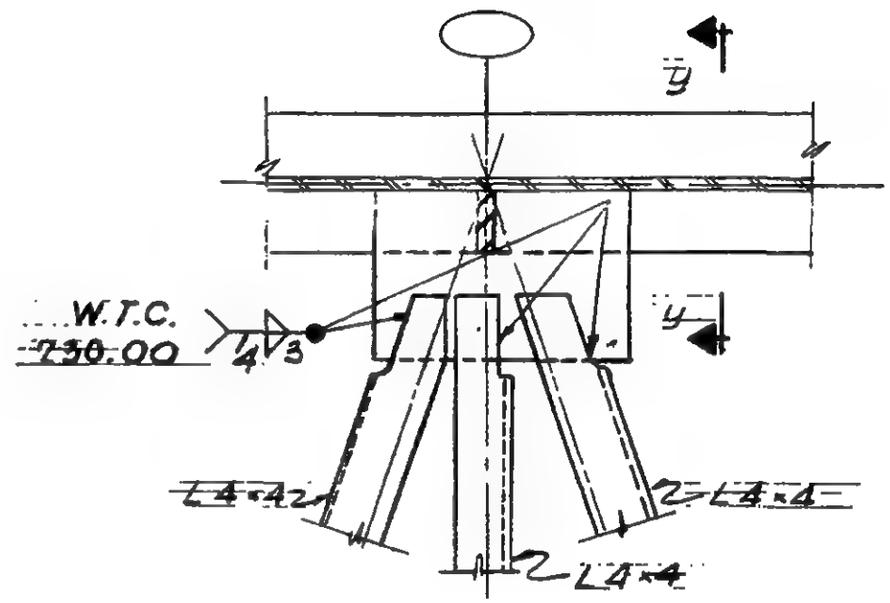

Detail D

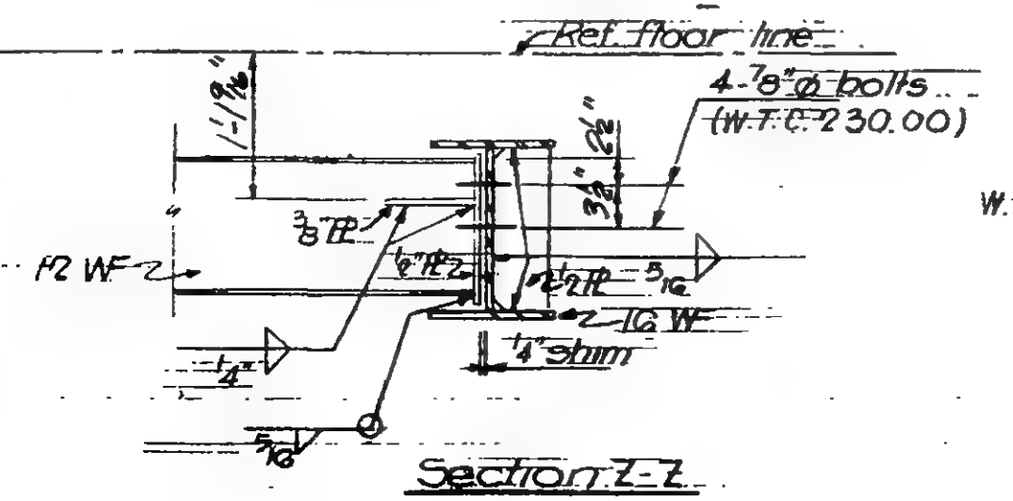

Section Z-Z

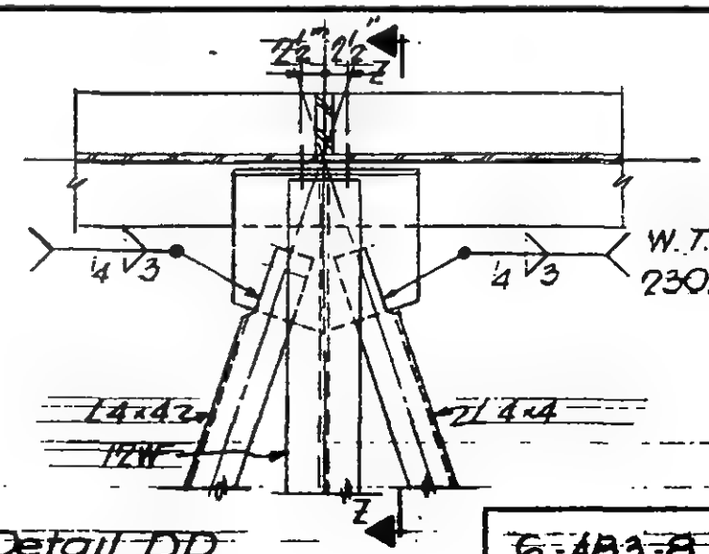

Detail DD

6-AB3-8

LICENSED PROFESSIONAL ENGINEER LESLIE E. ROBERTSON No. 34260 STATE OF NEW YORK

WORTHINGTON, SKILLING, HELLE & JACKSON — Civil & Structural Engineers

PROJECT: THE WORLD TRADE CENTER | TITLE: HORIZONTAL TRUSS - DETAILS F, G, H & J | DATE: 12-20-67

REVISIONS

8-29-68

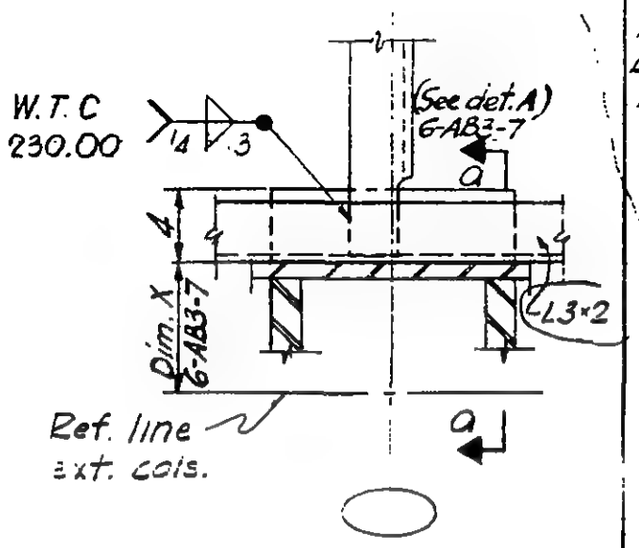

Detail F

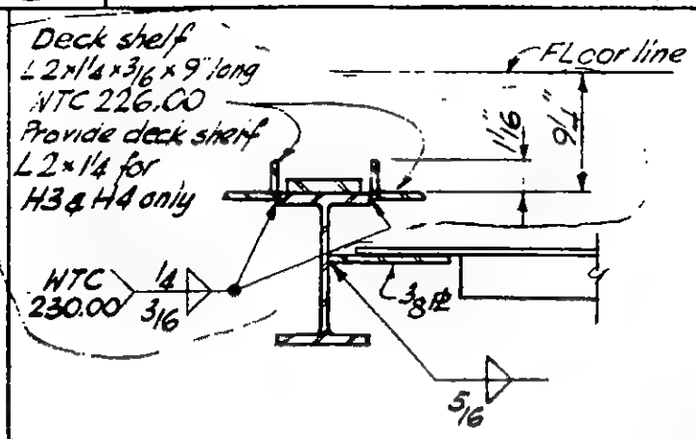

Section 6-6

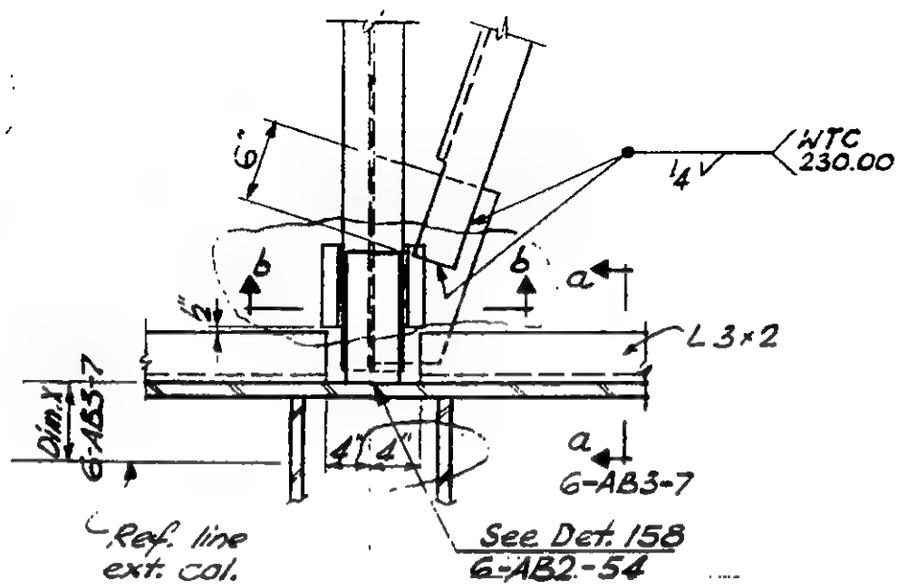

Detail G

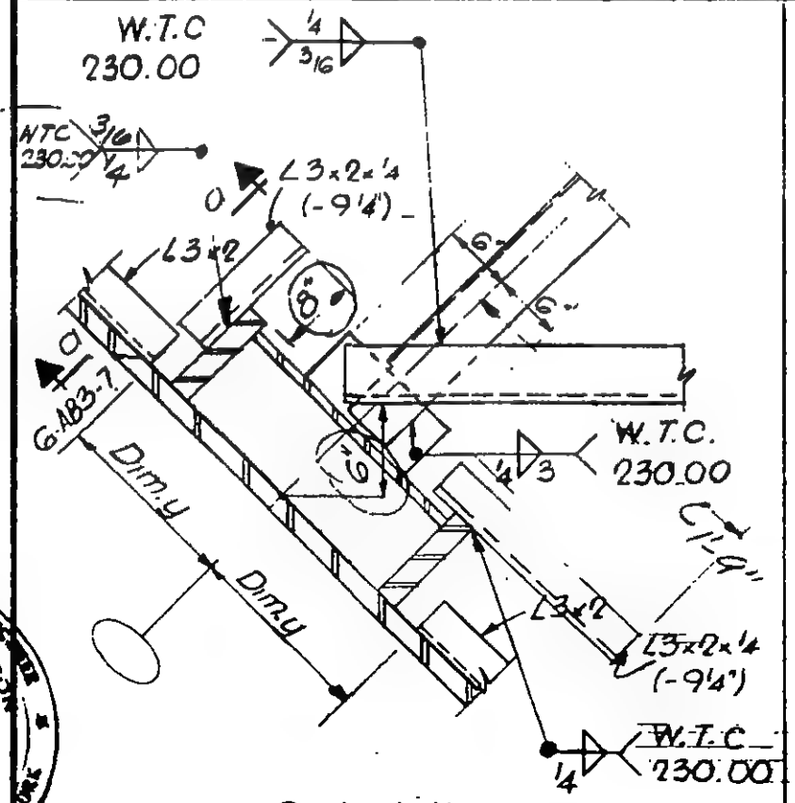

Detail H

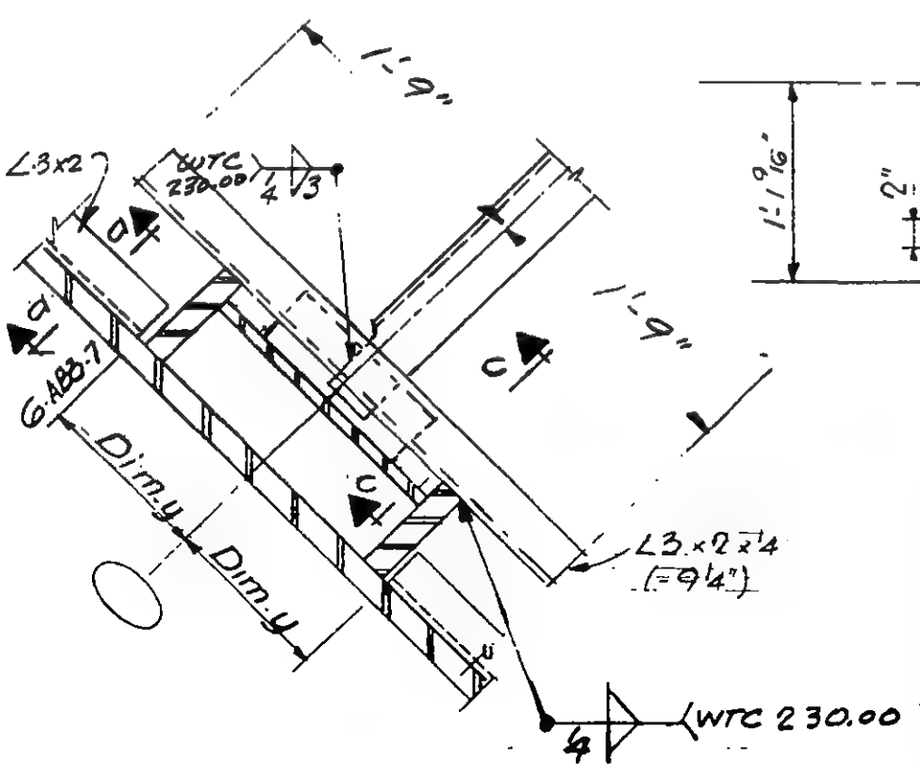

Detail J

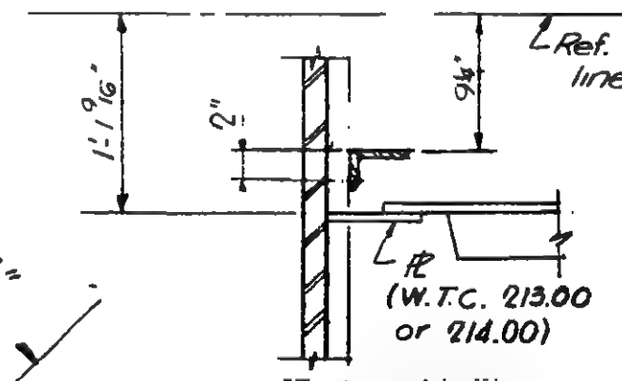

Section C-C

Dim. y		
Floor \ Col. No.	100 & 300	200 & 400
77, 75 & 9	11"	8"
41 & 43	8"	11"

G-AB3-9

LICENSED PROFESSIONAL ENGINEER LESLIE E. ROBERTSON No. 34360 STATE OF NEW YORK

WORTHINGTON, SKILLING, HELLE & JACKSON Civil & Structural Engineers

PROJECT	TITLE	DATE
THE WORLD TRADE CENTER	HORIZONTAL TRUSS - DETAILS K, L, M, N, MM, & NN	12-20-67

REVISIONS

8-29-68

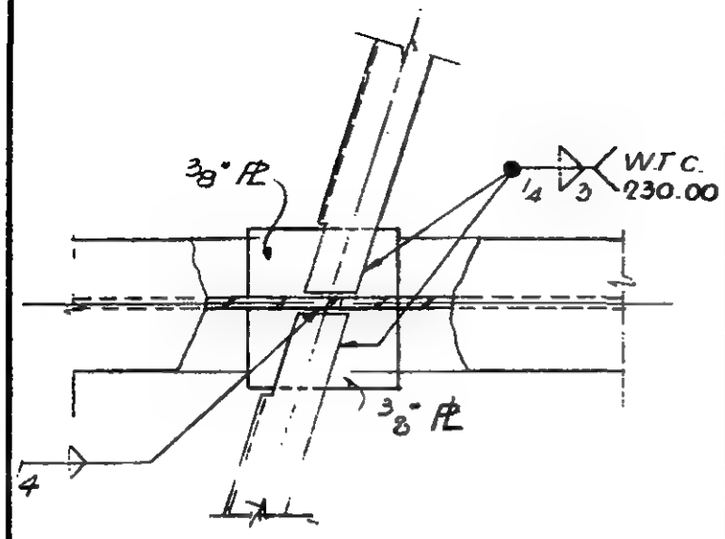

Detail K

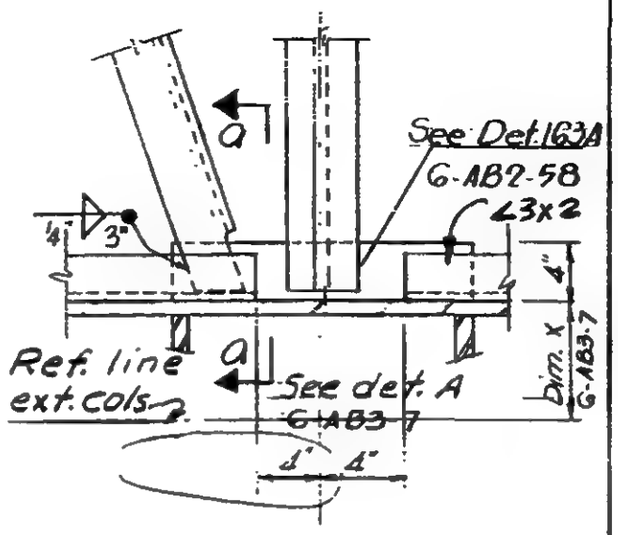

Detail L

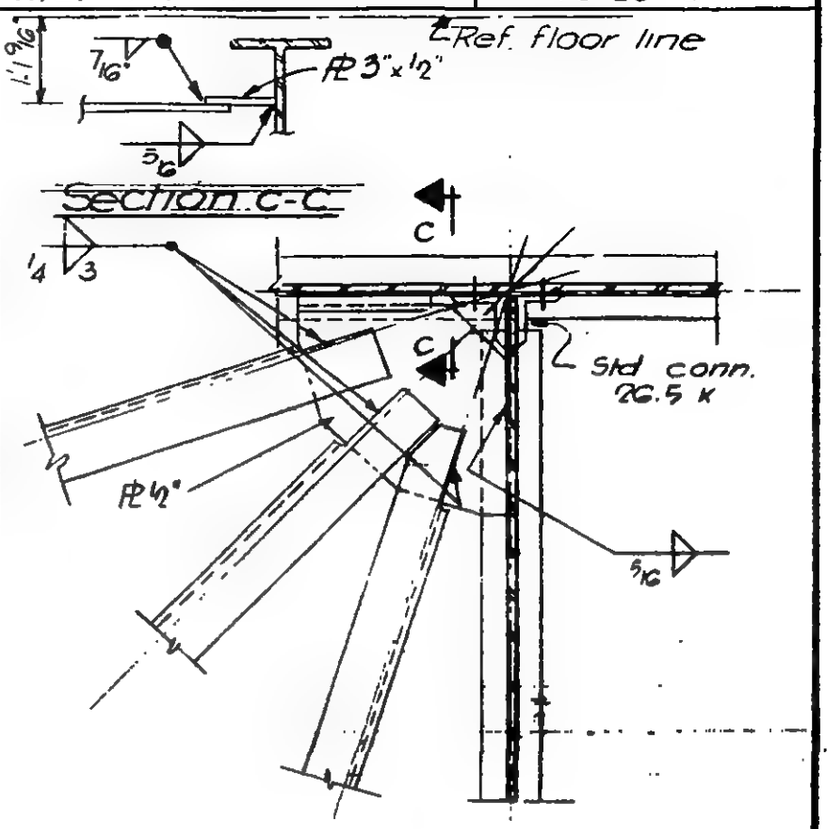

Detail M

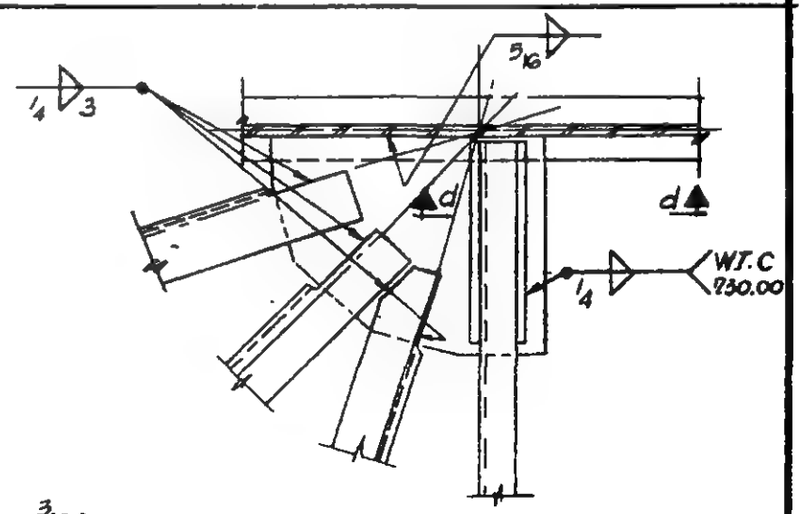

Detail MM

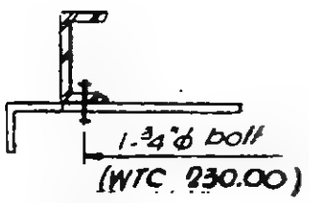

Detail NN

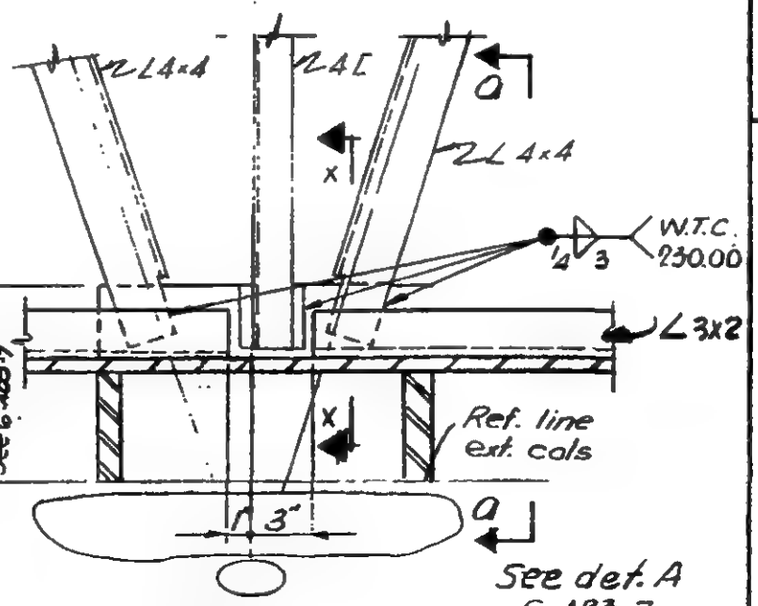

Detail N

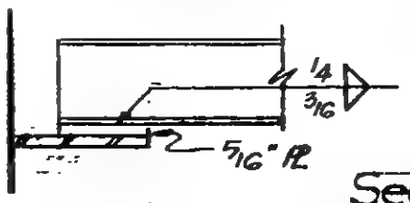

Section X-X

Section d-d

G-AB3-10

LICENSED PROFESSIONAL ENGINEER
LESLIE E. ROBERTSON
No. 34360
STATE OF NEW YORK

SKILLING - HELLE - CHRISTIANSEN - ROBERTSON Structural & Civil Engineers

PROJECT THE WORLD TRADE CENTER | TITLE HORIZONTAL TRUSS - DETAILS P, Q, R & T | DATE 12-20-67

REVISIONS

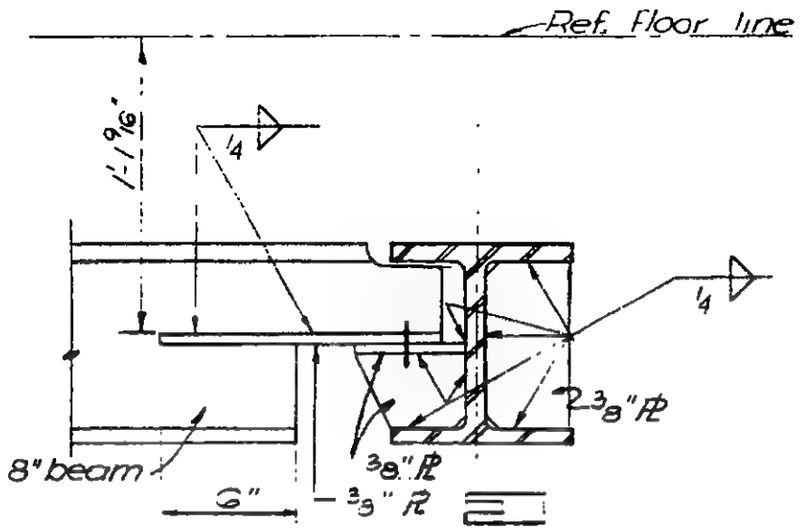

Section a-a

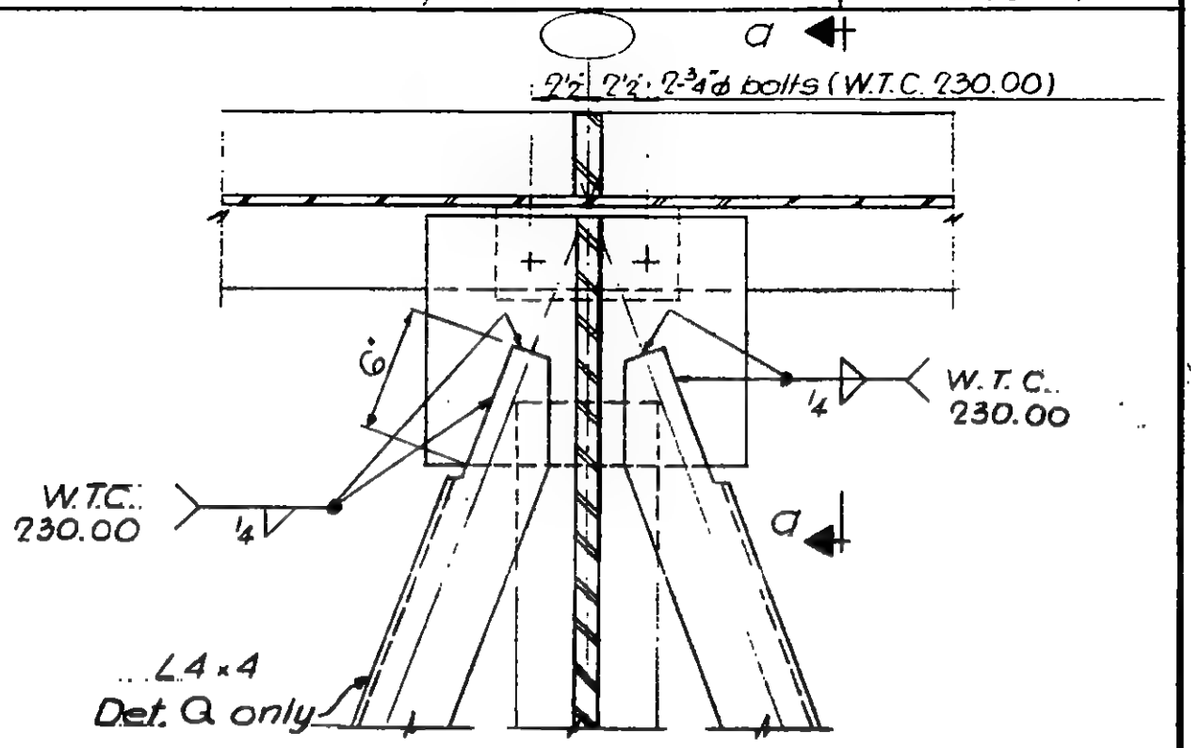

Plan

Detail P
Detail Q as noted

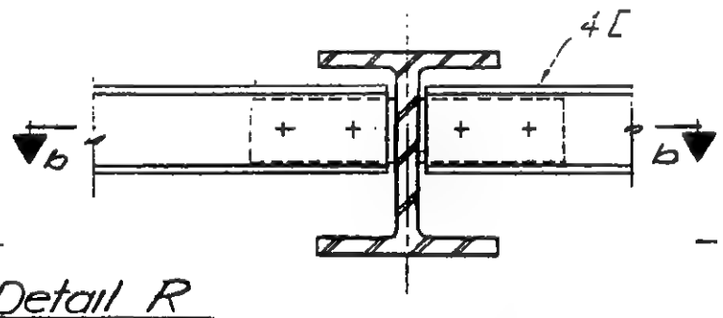

Detail R

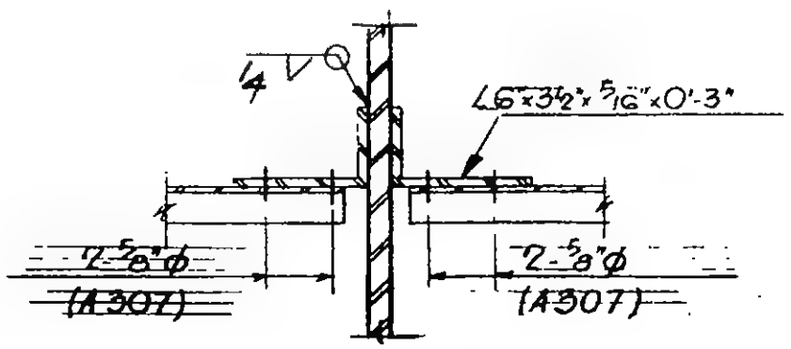

Section b-b

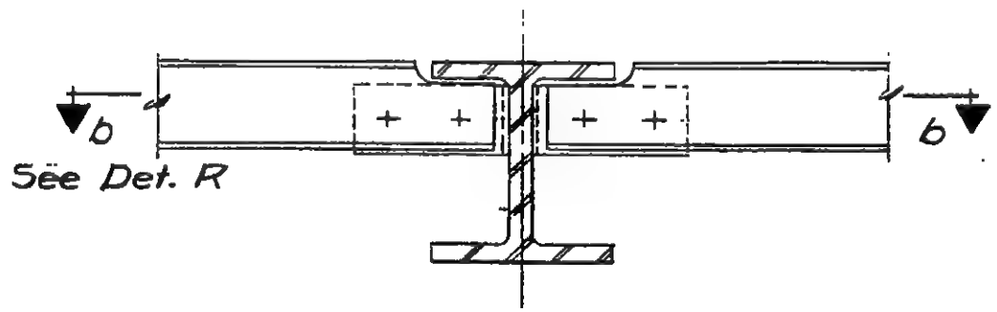

Detail T

LICENSED PROFESSIONAL ENGINEER
LESLIE E. ROBERTSON
No. 34360
STATE OF NEW YORK

6-AB3-11

SKILLING - HELLE - CHRISTIANSEN - ROBERTSON — Structural & Civil Engineers

PROJECT THE WORLD TRADE CENTER | TITLE HORIZONTAL TRUSS - DETAILS V, W & YY | DATE 12-20-67

REVISIONS

8-29-68

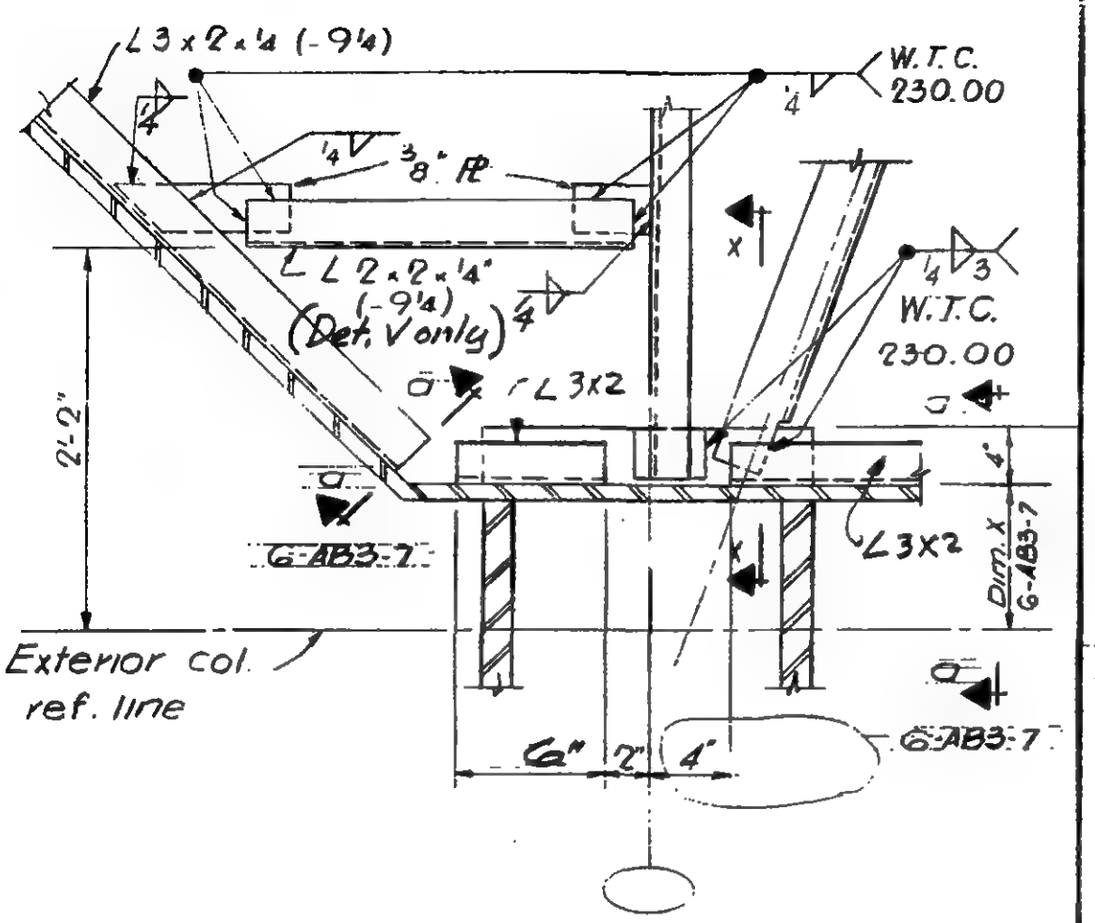

Plan

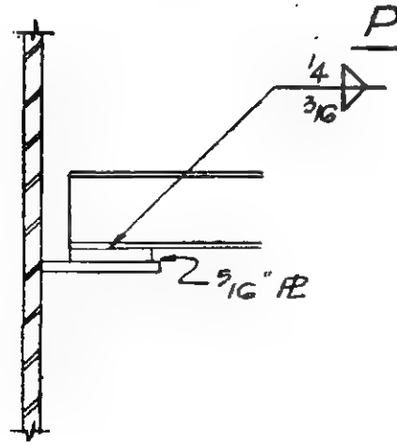

Section X-X

Detail V
Detail VV as noted

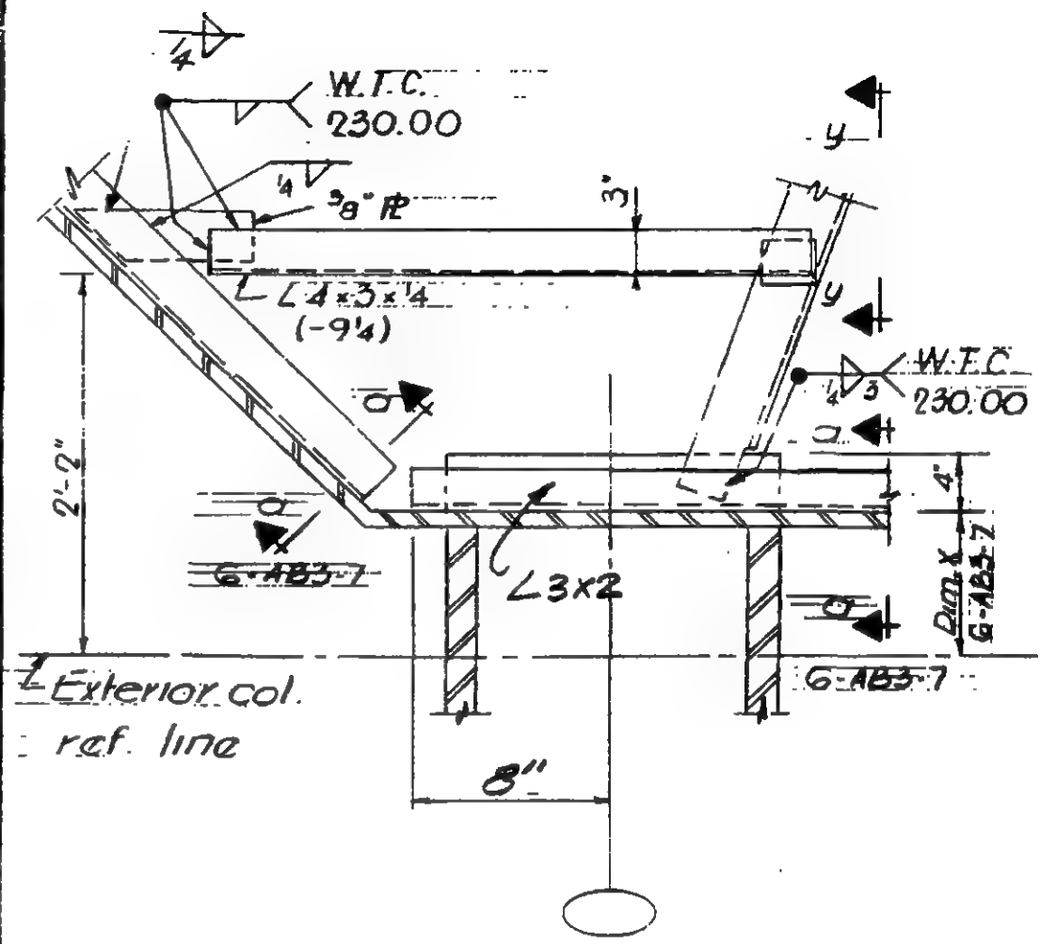

Plan

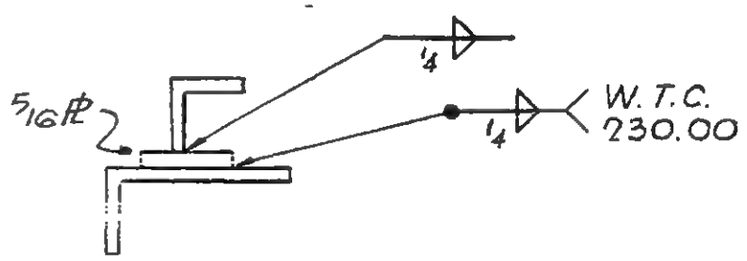

Section y-y

Detail W

G-AB3-11.1

LICENSED PROFESSIONAL ENGINEER LESLIE E. ROBERTSON No. 34360 UNIVERSITY OF THE STATE OF NEW YORK

WORTHINGTON, SKILLING, HELLE & JACKSON — Civil & Structural Engineers

PROJECT THE WORLD TRADE CENTER | TITLE HORIZONTAL TRUSS DETAILS AA, BB, CC | DATE 12-20-67

REVISIONS

8-29-68

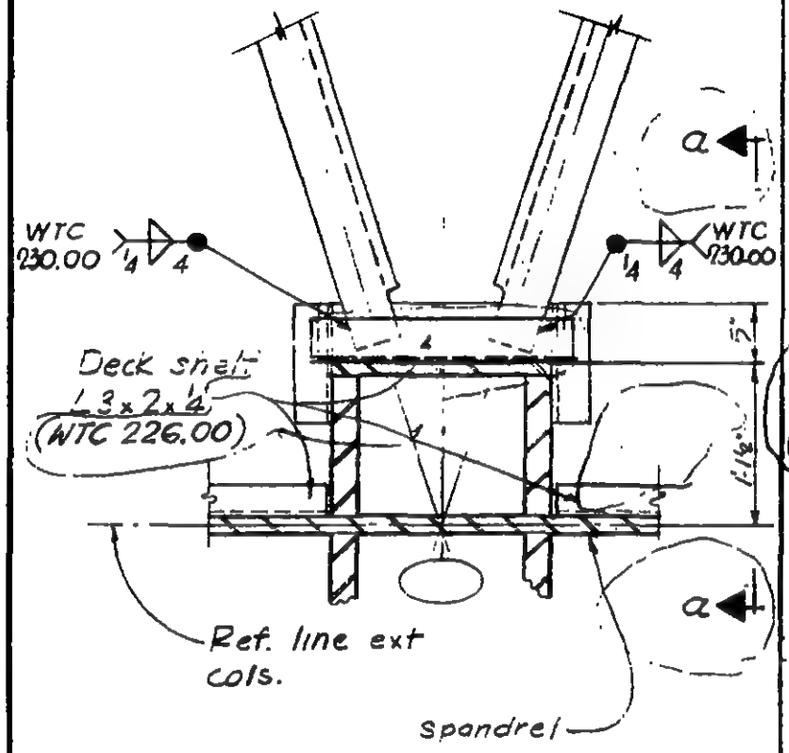

Detail AA

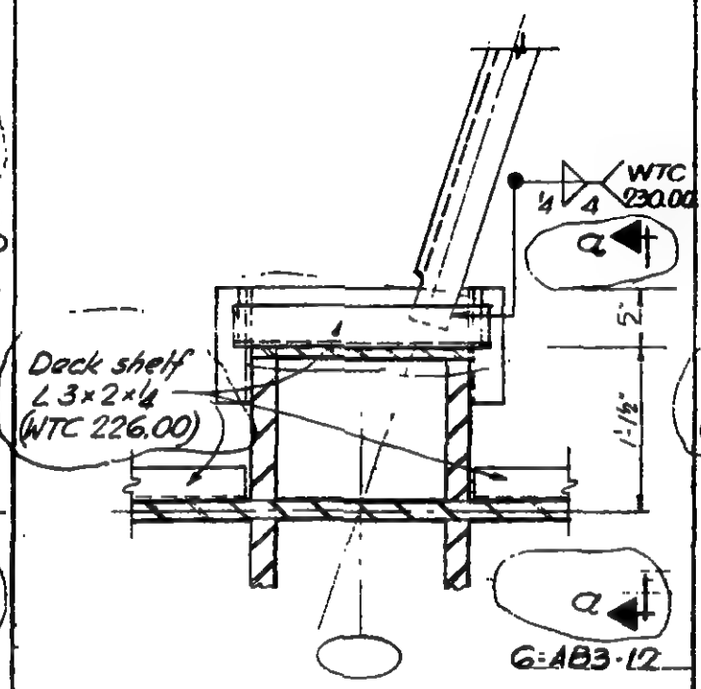

Detail BB

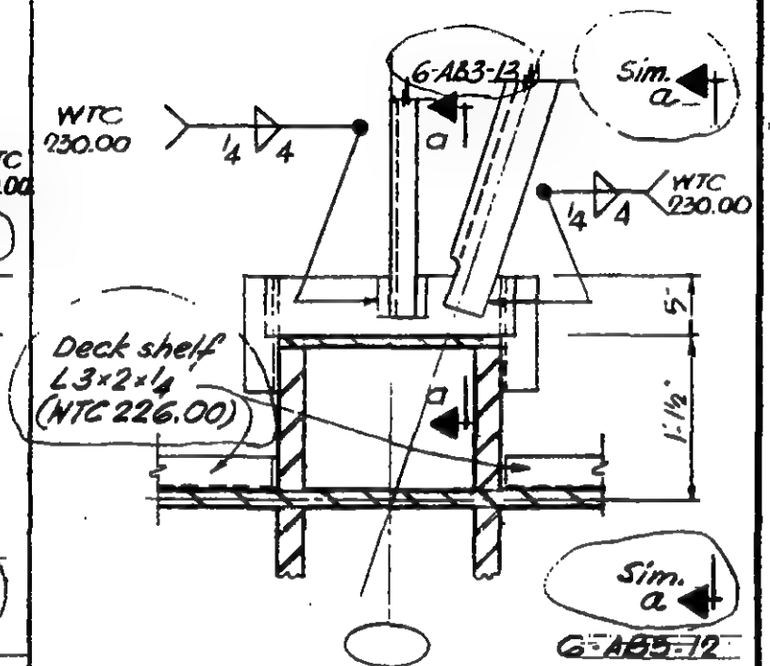

Detail CC

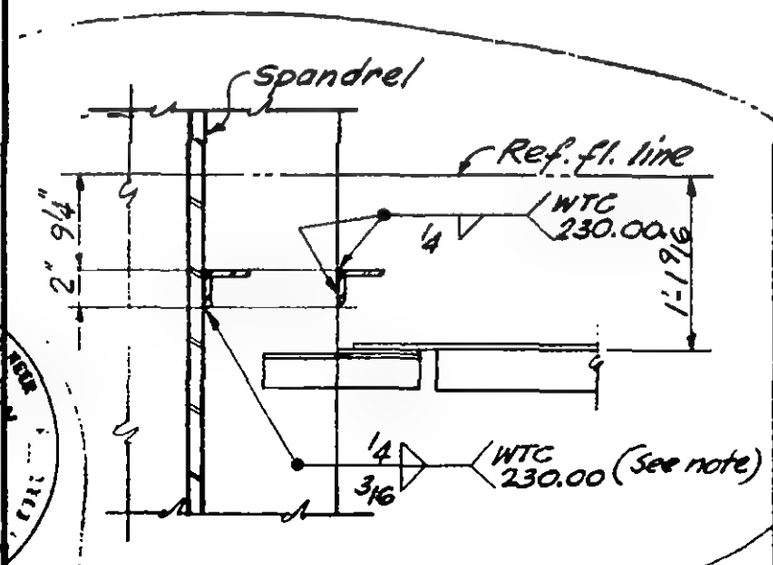

Section a-a

Notes:
1) At spandrel splice for position and weld requirement of deck shelf angle, see Det. UU G-AB3-25

LICENSED PROFESSIONAL ENGINEER
LESLIE E. ROBERTSON
No. 34360
STATE OF NEW YORK

G-AB3-12

WORTHINGTON, SKILLING, HELLE & JACKSON — Civil & Structural Engineers

PROJECT: THE WORLD TRADE CENTER | TITLE: HORIZONTAL TRUSS - DETAILS EE & FF | DATE: 12-20-67

REVISIONS

8-29-68

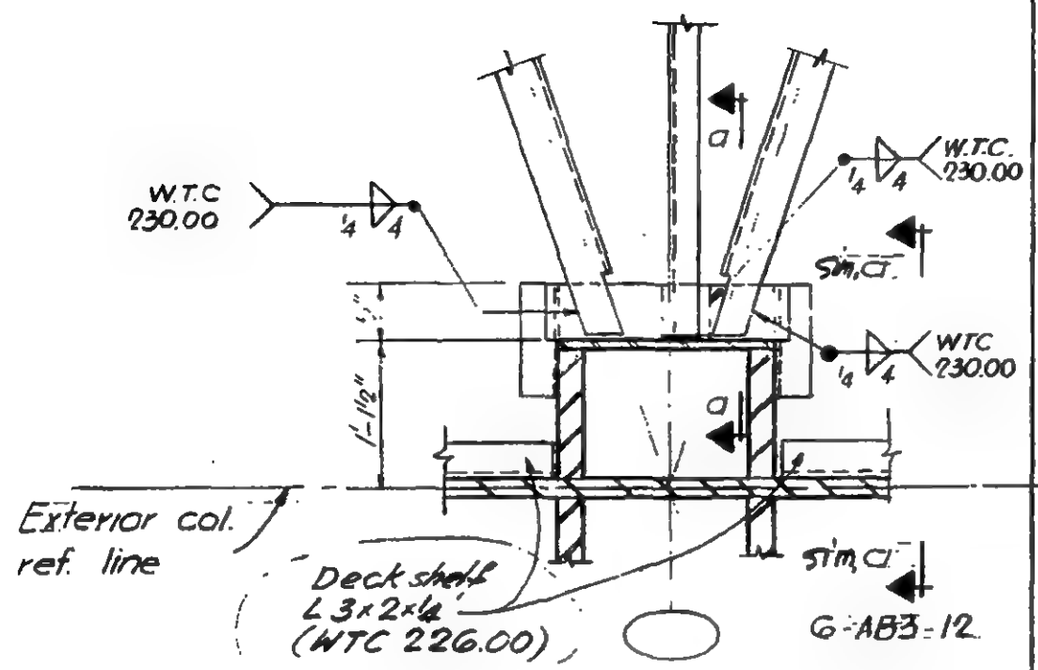

Detail FF

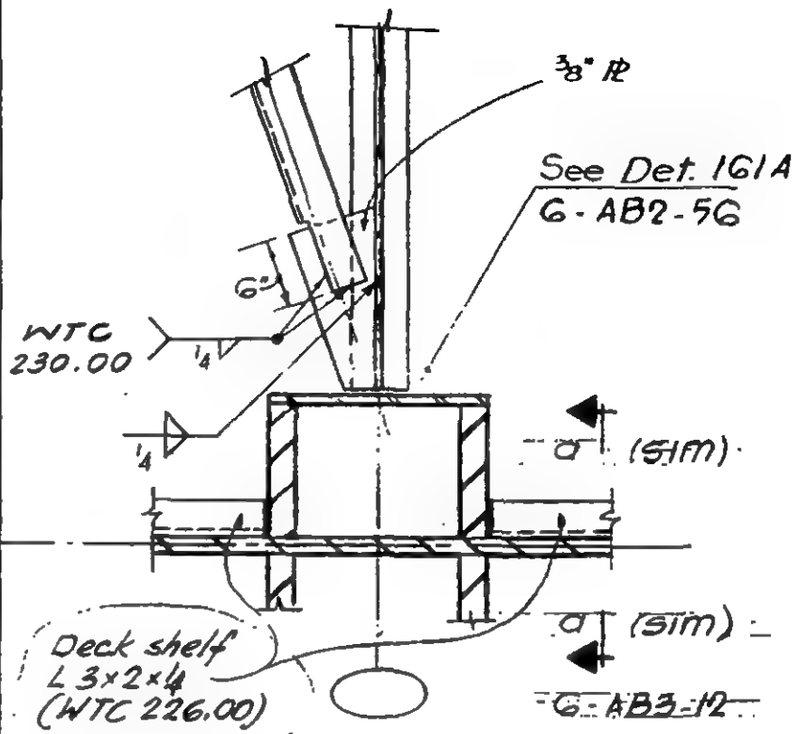

Detail EE

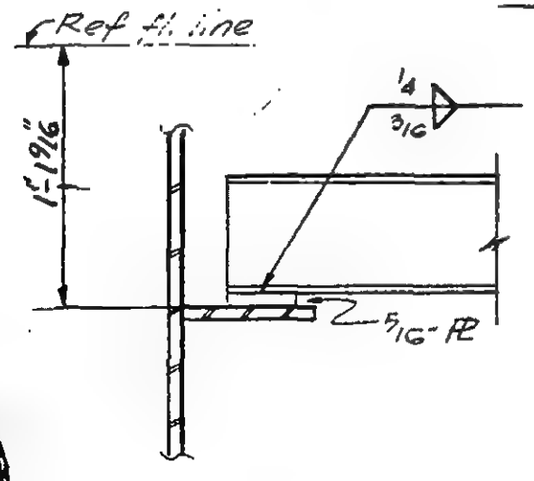

Section a-a

LICENSED PROFESSIONAL ENGINEER
LESLIE E. ROBERTSON
No. 34360
STATE OF NEW YORK

G-AB3-13

WORTHINGTON, SKILLING, HELLE & JACKSON — Civil & Structural Engineers

PROJECT: THE WORLD TRADE CENTER | TITLE: HORIZONTAL TRUSSES H20, H21, H22 H54, H55, H56 | DATE: 12-20-67

REVISIONS

8-29-68

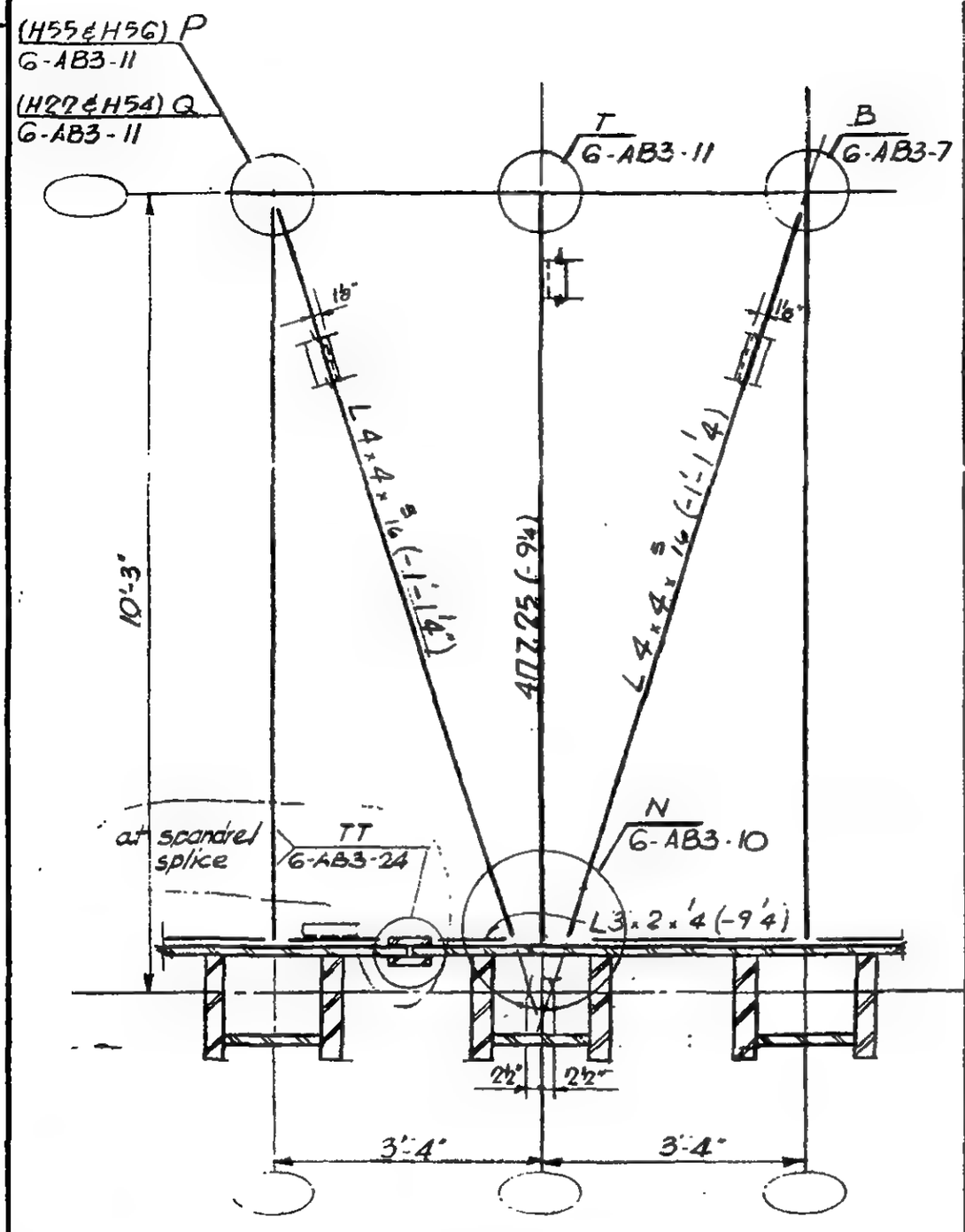

H22
H54 opp. hand
H55 as noted
H56 opp. hand as noted

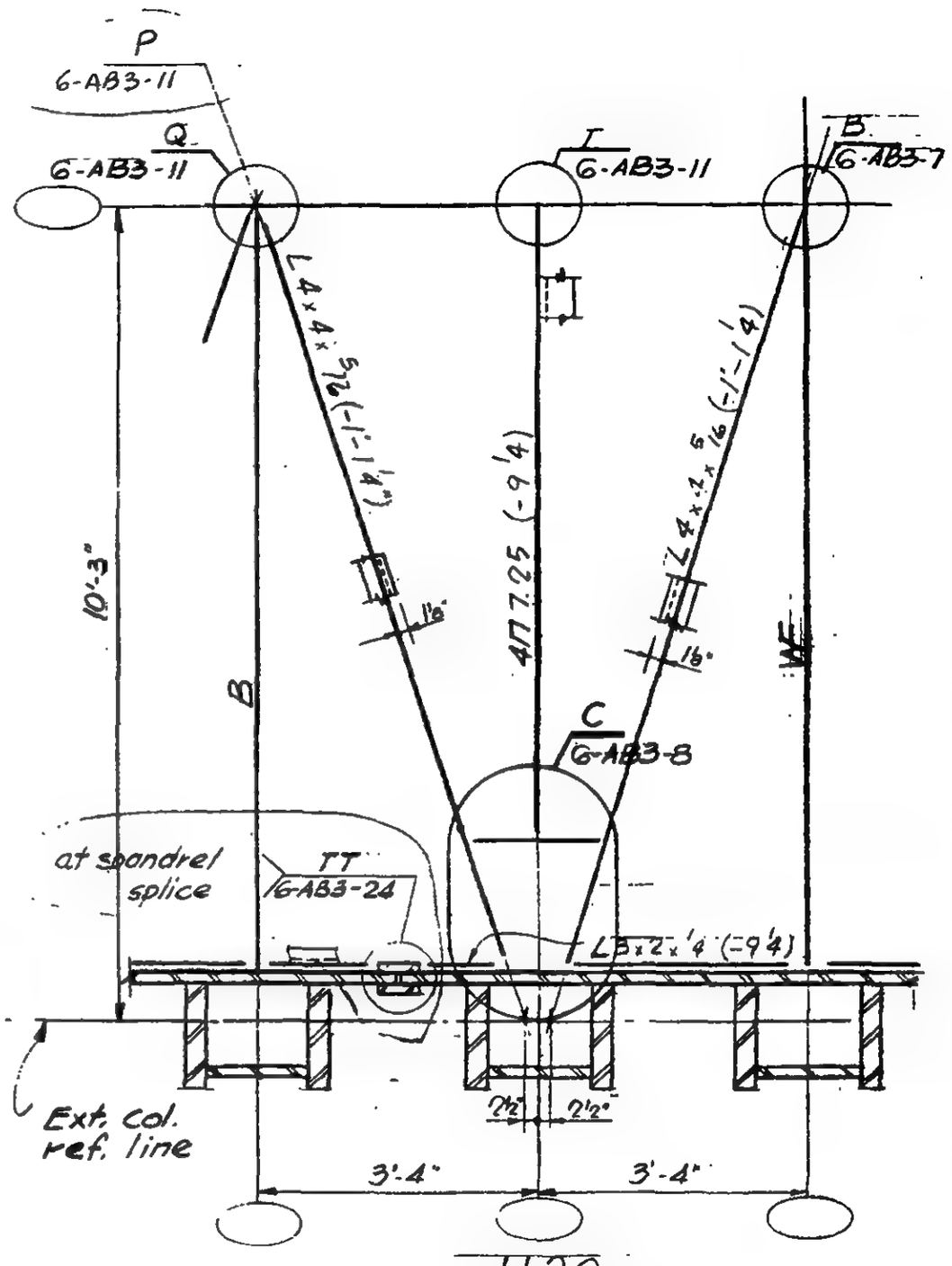

H20
H21 Opp hand

LICENSED PROFESSIONAL ENGINEER
LESLIE E. ROBERTSON
No. 34360
STATE OF THE STATE OF NY

G-AB3-14

SKILLING - HELLE - CHRISTIANSEN - ROBERTSON Structural & Civil Engineers

PROJECT THE WORLD TRADE CENTER | TITLE HORIZONTAL TRUSSES H23. H24. H52 & H53 | DATE 12-20-67

REVISIONS

1-24-68

8-29-68

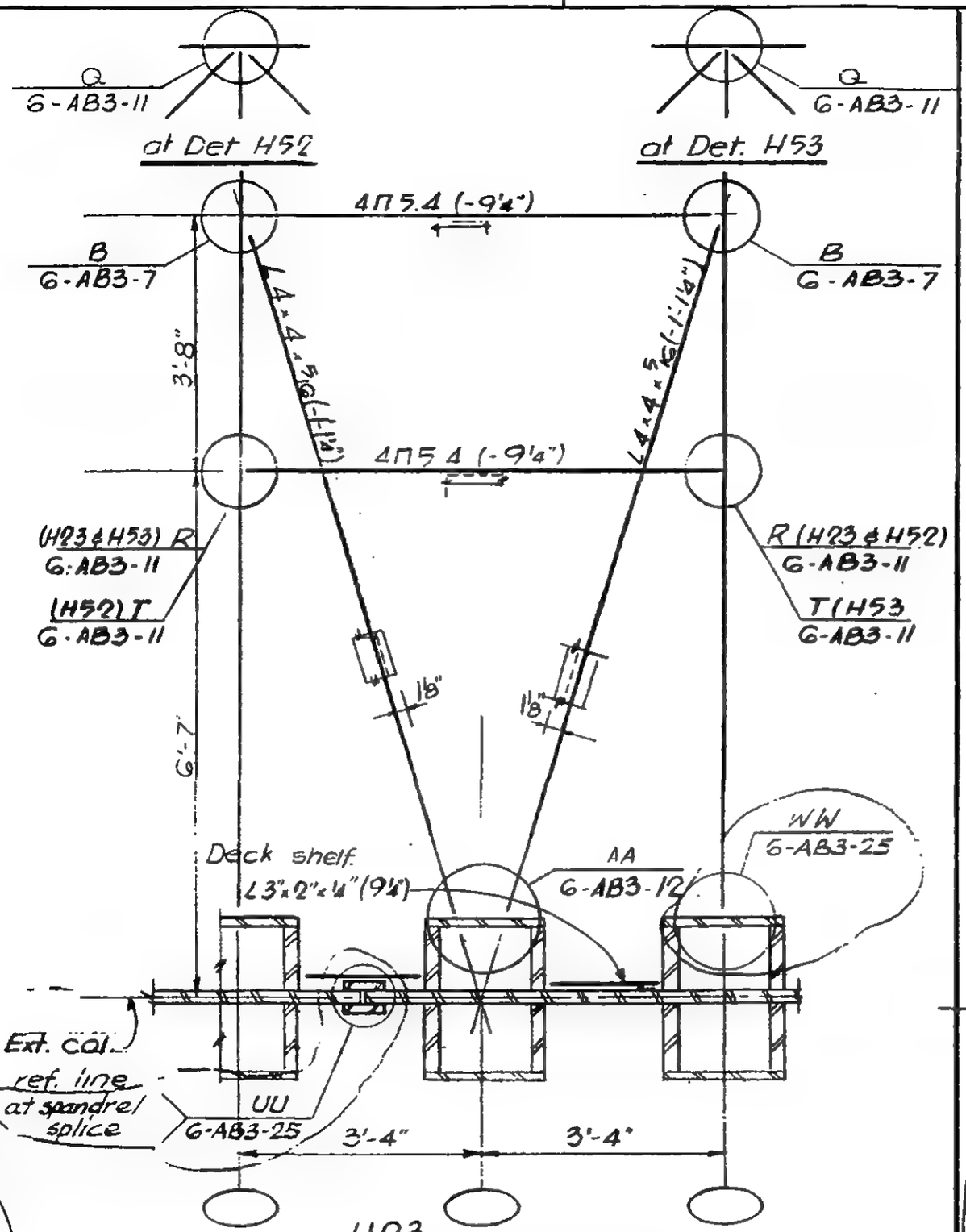

H23

H52 as noted

H53 as noted

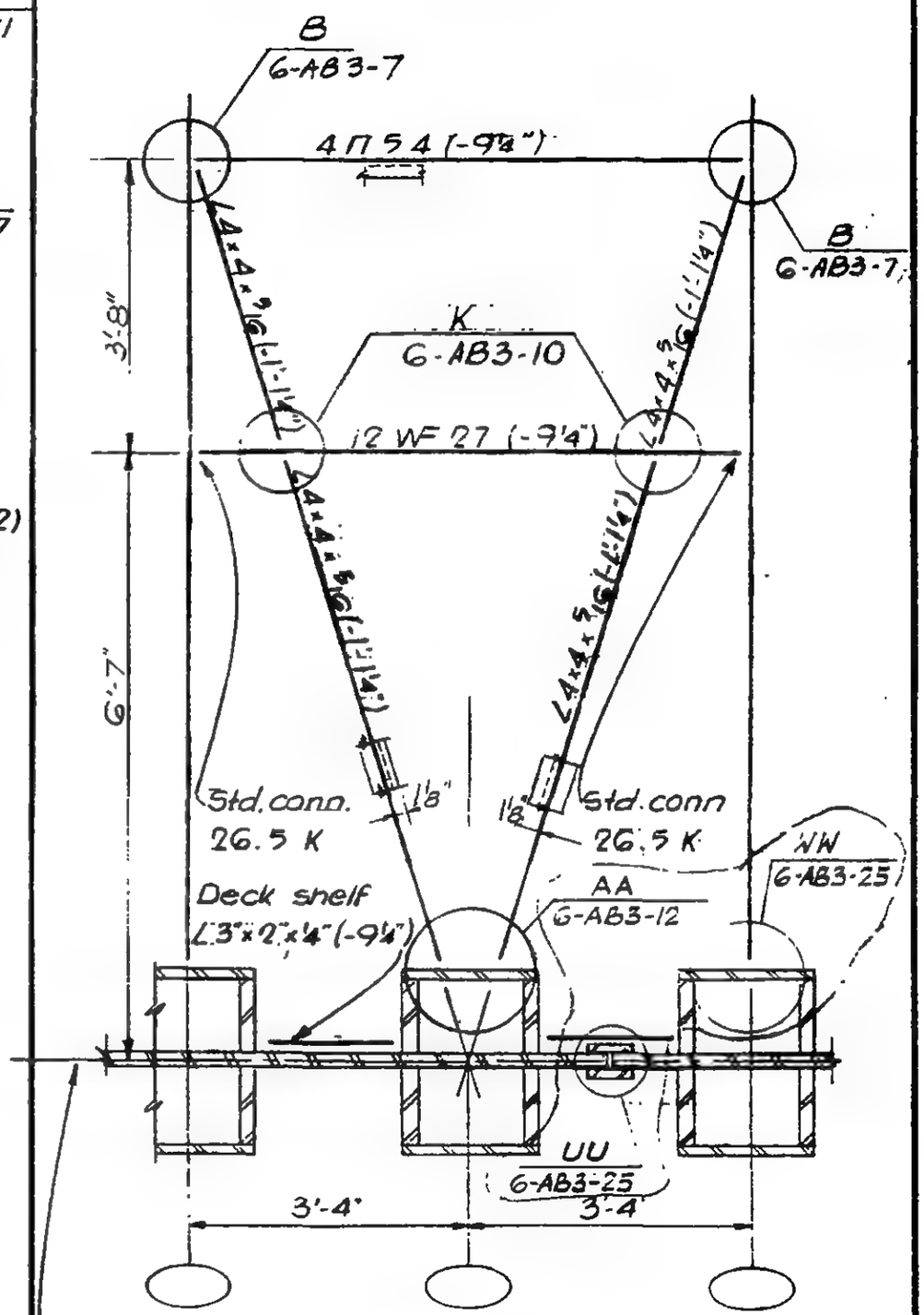

Ext. col. ref. line

H24

G-AB3-15

LICENSED PROFESSIONAL ENGINEER
LESLIE E. ROBERTSON
No. 34360
THE STATE OF NEW YORK

SKILLING - HELLE - CHRISTIANSEN - ROBERTSON Structural & Civil Engineers

PROJECT THE WORLD TRADE CENTER | TITLE HORIZONTAL TRUSSES H25 & H26 | DATE 12-20-67

REVISIONS

12/21/67

8-29-68

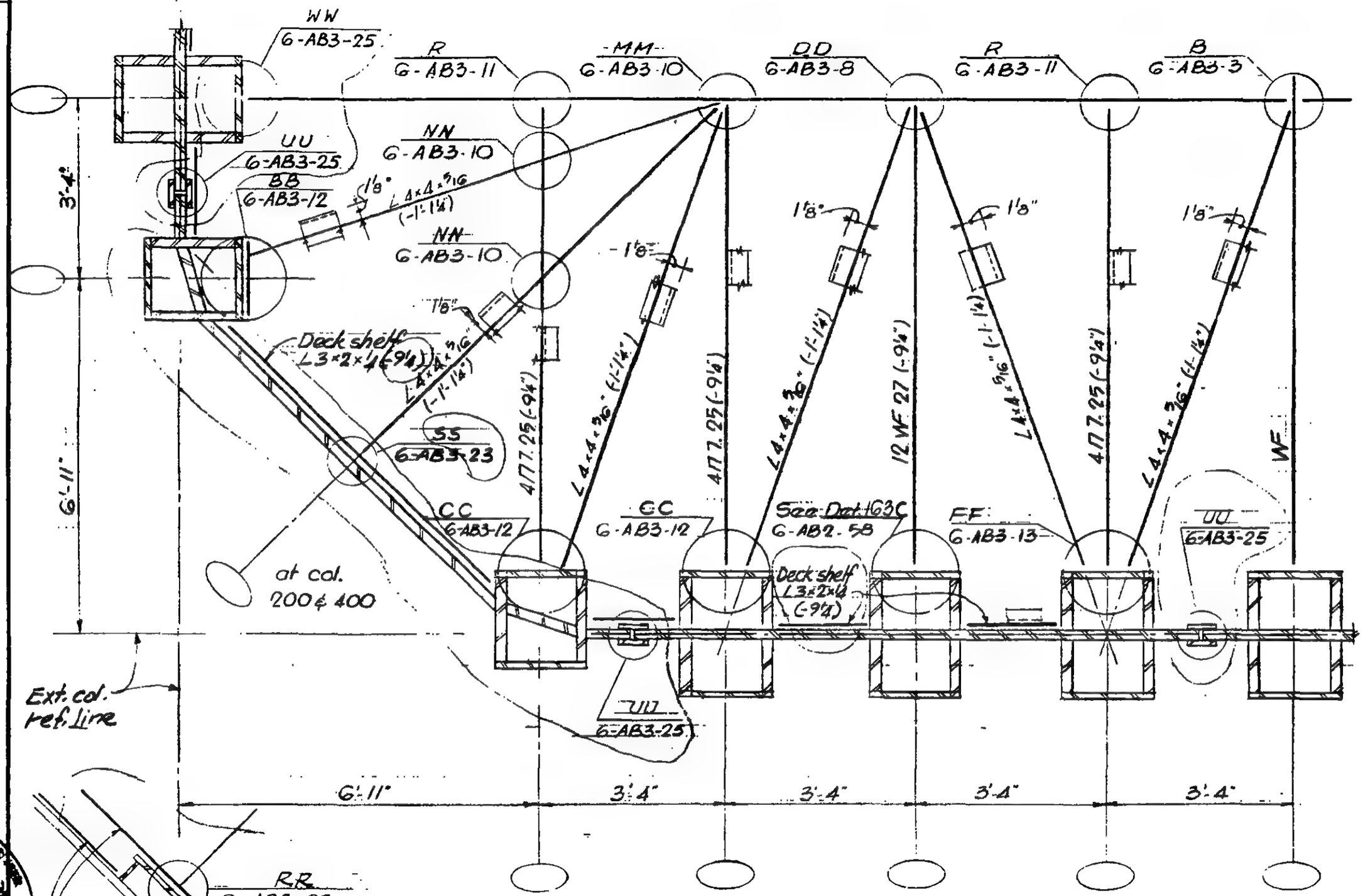

H25

H26 opp. hand

G-AB3-16

LICENSED PROFESSIONAL ENGINEER LESLIE E. ROBERTSON NO. 24260 STATE OF NEW YORK

SKILLING - HELLE - CHRISTIANSEN - ROBERTSON Structural & Civil Engineers

PROJECT THE WORLD TRADE CENTER | TITLE HORIZONTAL TRUSSES H27, H28 & H51 | DATE 12-20-67

REVISIONS

1-24-68

8-29-68

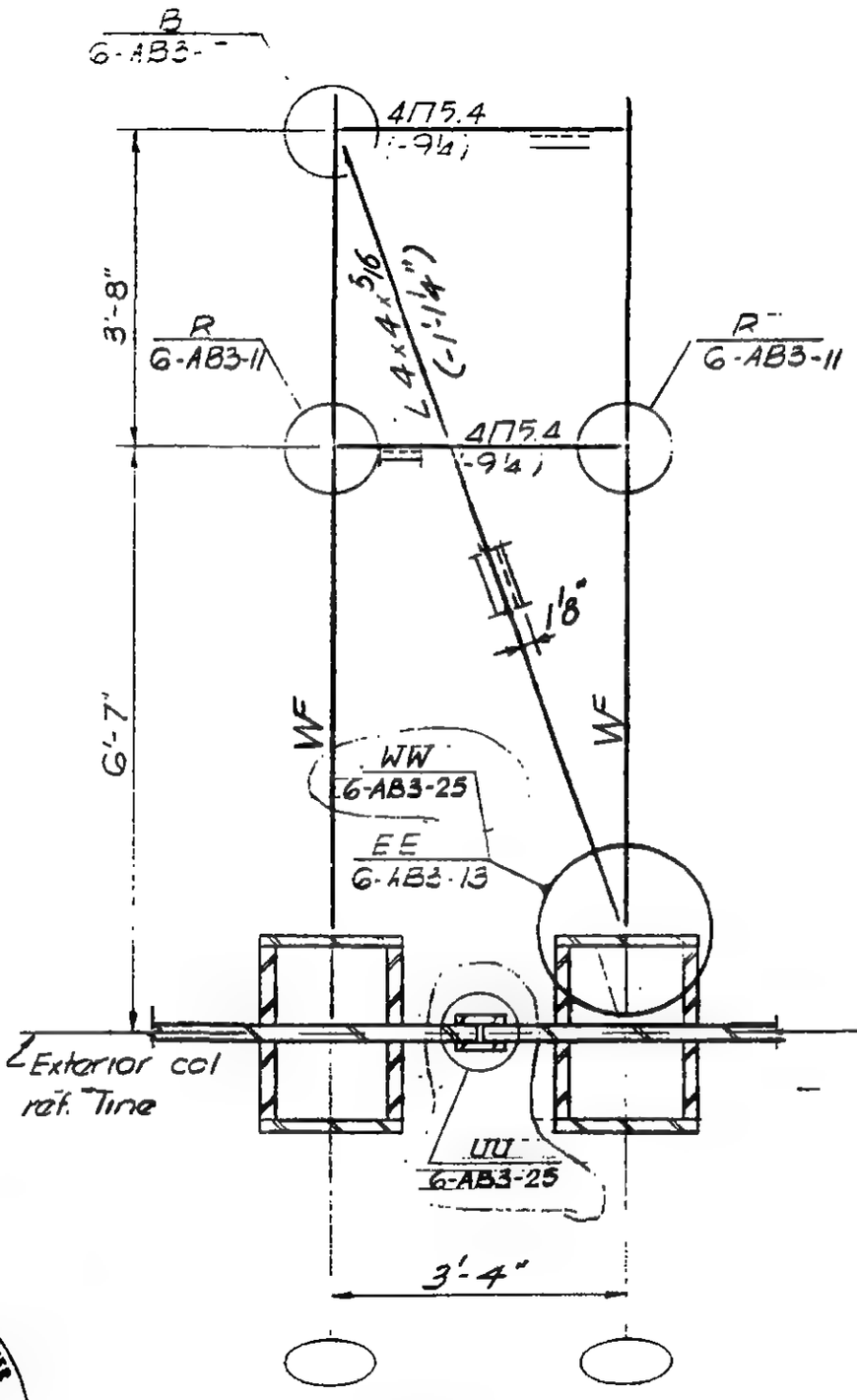

H27

H28 opp hand

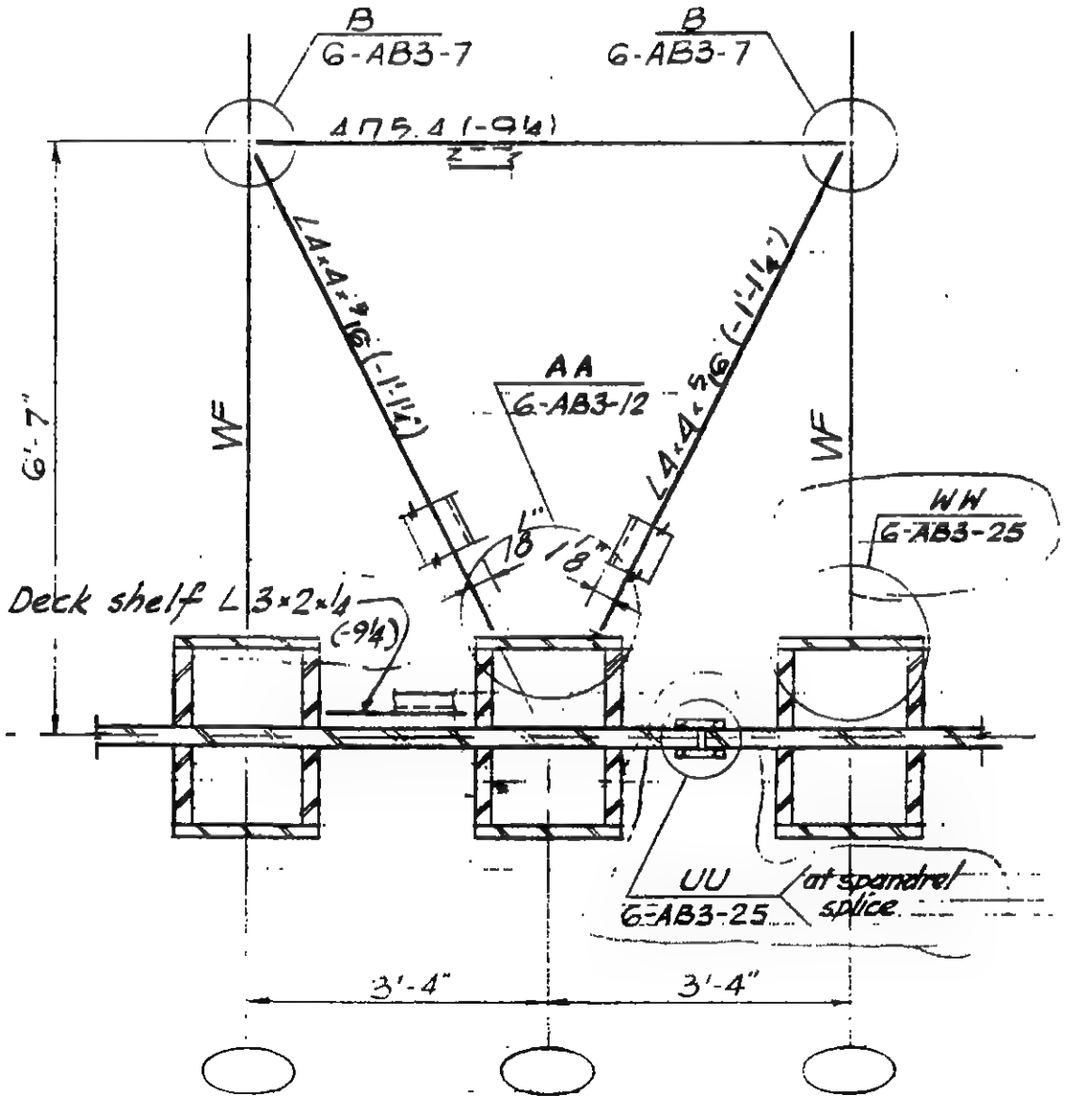

H51

G-AB3-17

LICENSED PROFESSIONAL ENGINEER
LESLIE E. ROBERTSON
No. 34360
STATE OF NEW YORK

SKILLING - HELLE - CHRISTIANSEN - ROBERTSON Structural & Civil Engineers

PROJECT THE WORLD TRADE CENTER | TITLE HORIZONTAL TRUSSES H30; H34, H35, H36 & H37 | DATE 12-20-67

REVISIONS

8-29-68

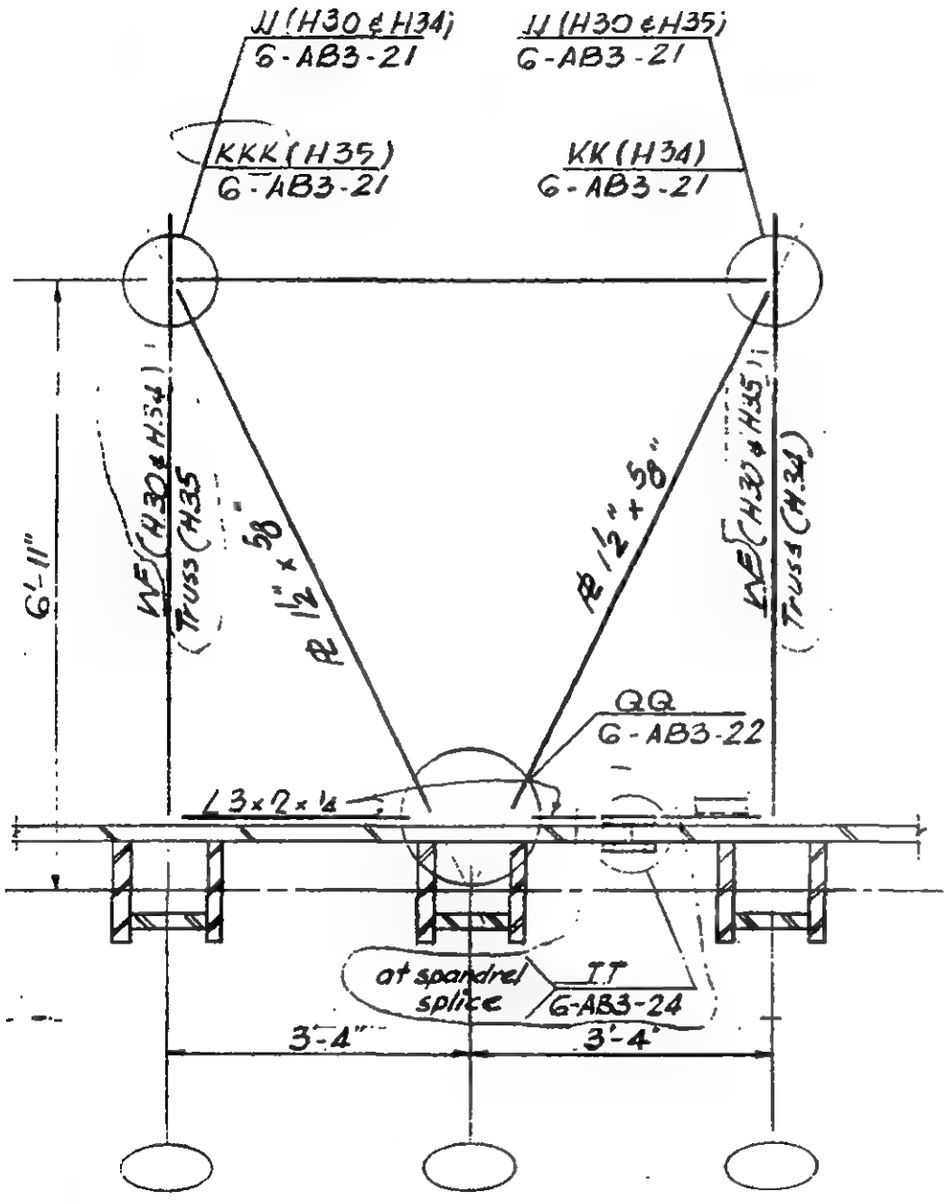

H30
H34
H35

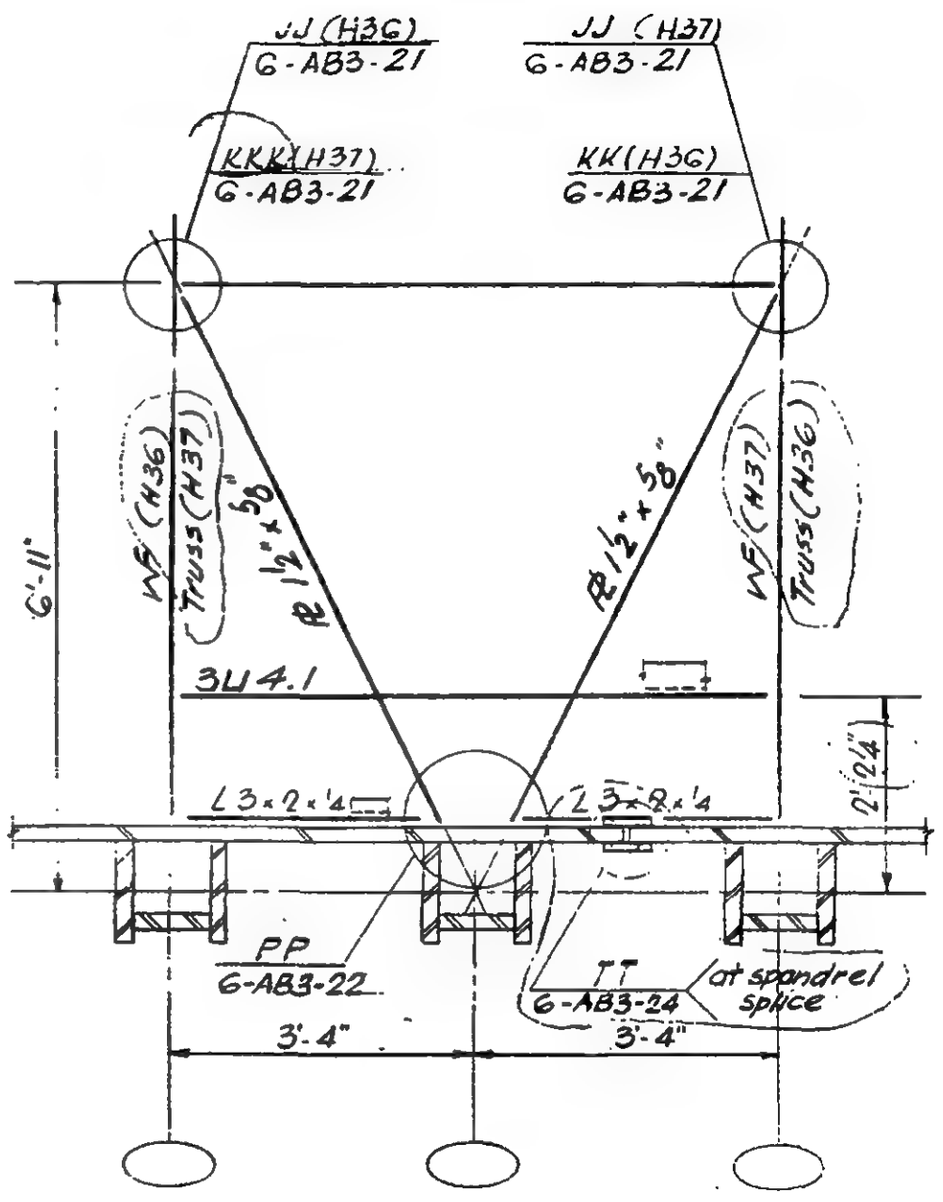

H36
H37

G-AB3-18

LICENSED PROFESSIONAL ENGINEER
LESLIE E. ROBERTSON
No. 34360
STATE OF THE STATE OF NEW YORK

SKILLING - HELLE - CHRISTIANSEN - ROBERTSON Structural & Civil Engineers

PROJECT THE WORLD TRADE CENTER | TITLE HORIZONTAL TRUSSES H32 & H33 | DATE 12-20-67

REVISIONS

8-29-68

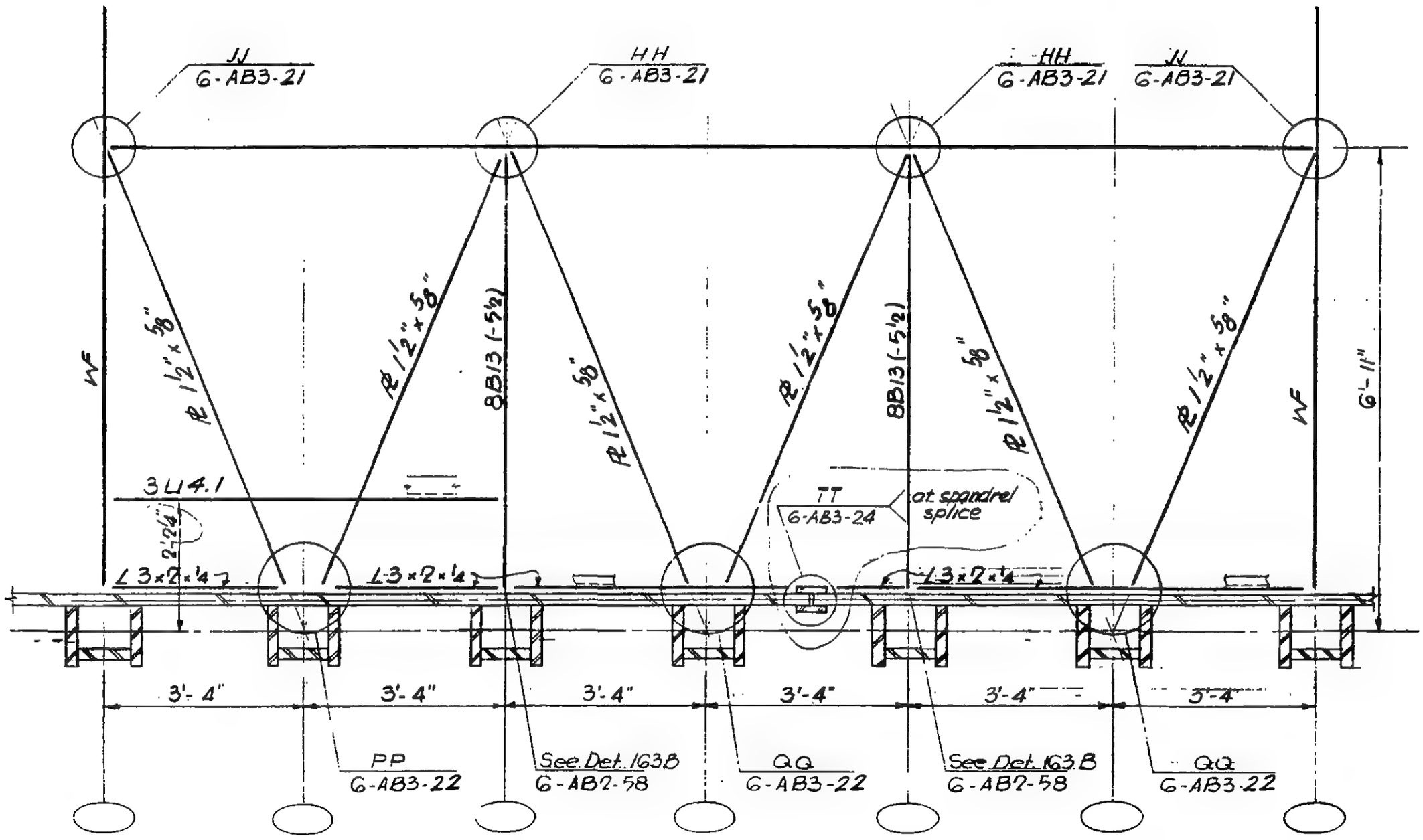

H32
H33 opp hand

G-AB3-19

REGISTERED PROFESSIONAL ENGINEER
LUDERVILLE L. ROBERTSON
No. 34380
STATE OF NEW YORK

SKILLING, HELLE, CHRISTIANSEN, ROBERTSON — Structural & Civil Engineers

PROJECT: THE WORLD TRADE CENTER | TITLE: HORIZONTAL TRUSS H38 | DATE: 12-20-67

REVISIONS

8-29-68

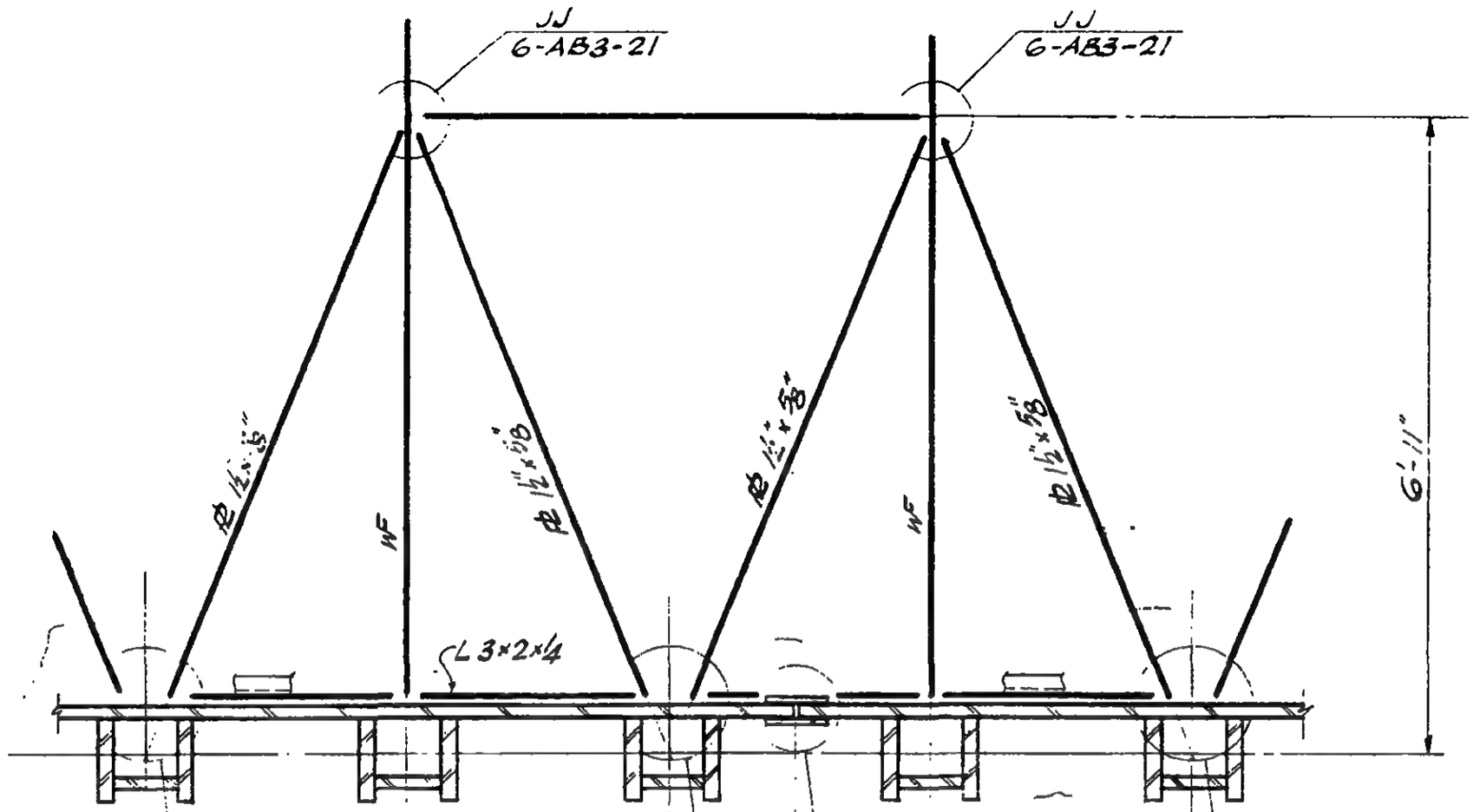

Extent of truss @ locations as noted in TABLE "B" only

Extent of truss @ all remaining locations other than those noted in TABLE "A" & "B"

Extent of truss @ location as noted in TABLE "A" only

H38

TABLE "A"	
Fl.	Truss with center col. line
46	242
47	242
48	242
79	442
80	442
81	442
82	442

TABLE "B"	
Fl.	Truss with center col. line
45	418
46	418
47	418
48	418
80	218
81	218
82	218

DESIGNED

DRAWN

REVIEWED

6-AB3-20

SKILLING - HELLE - CHRISTIANSEN - ROBERTSON Structural & Civil Engineers

PROJECT THE WORLD TRADE CENTER | TITLE HORIZONTAL TRUSS H31 | DATE 8-27-68

REVISIONS

1

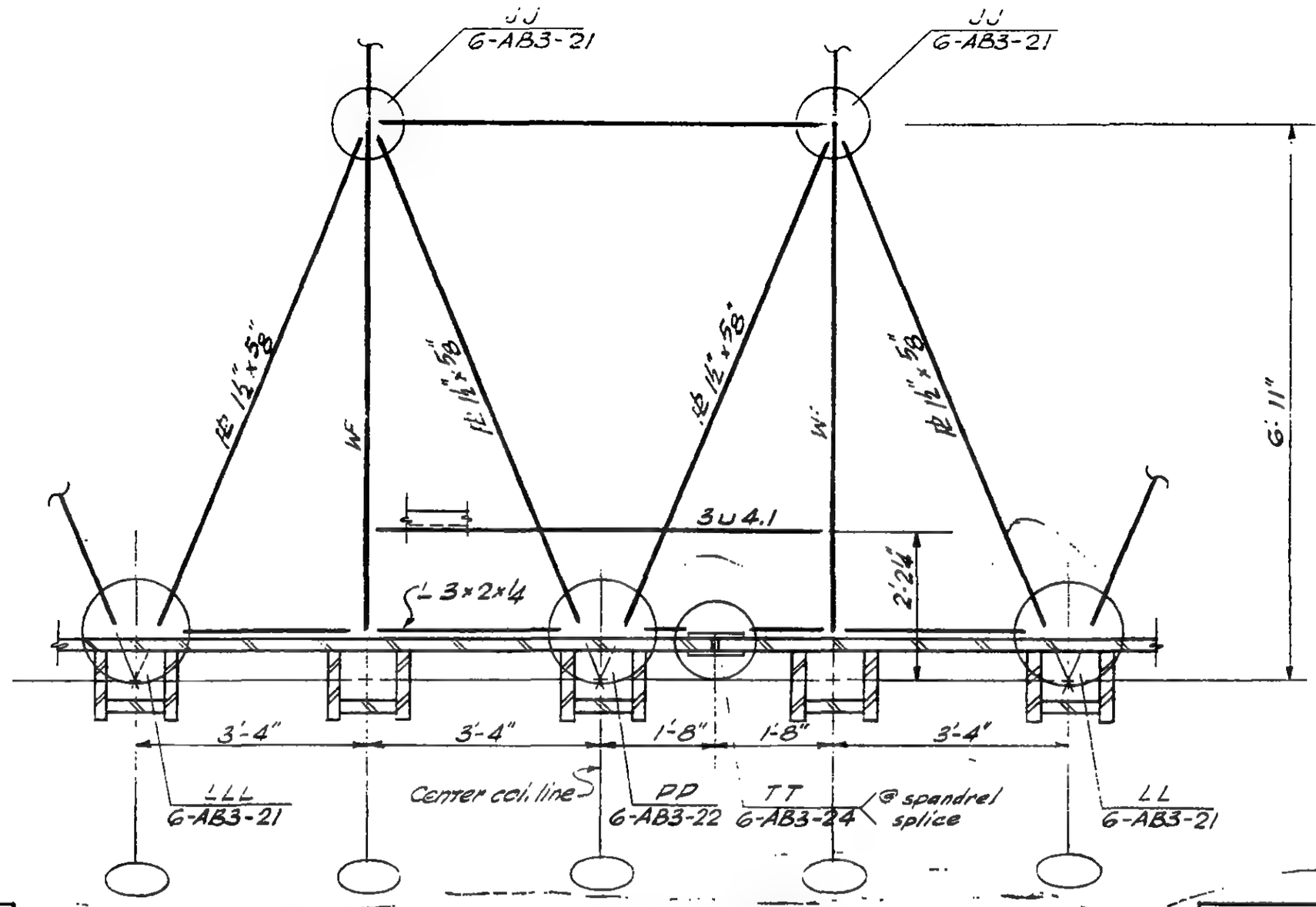

Extent of truss @ locations as noted in TABLE "B" only

Extent of truss @ all remaining locations other than those noted in TABLE "A" & "B"

Extent of truss @ locations as noted in TABLE "A" only

H31

TABLE "A"	
Fl.	Truss with center col. line
44	242, 442
45	242
49	242
78	242, 442
79	242
83	442

TABLE "B"	
Fl.	Truss with center col. line
44	218, 418
45	218
49	418
78	218, 418
79	218
83	218

G-AB3-20.1

SKILLING - HELLE - CHRISTIANSEN - ROBERTSON — Structural & Civil Engineers

PROJECT THE WORLD TRADE CENTER | TITLE HORIZONTAL TRUSS-DETAILS HH, JJ, KK, LL, KKK, LLL | DATE 12-20-67

REVISIONS

8-29-68

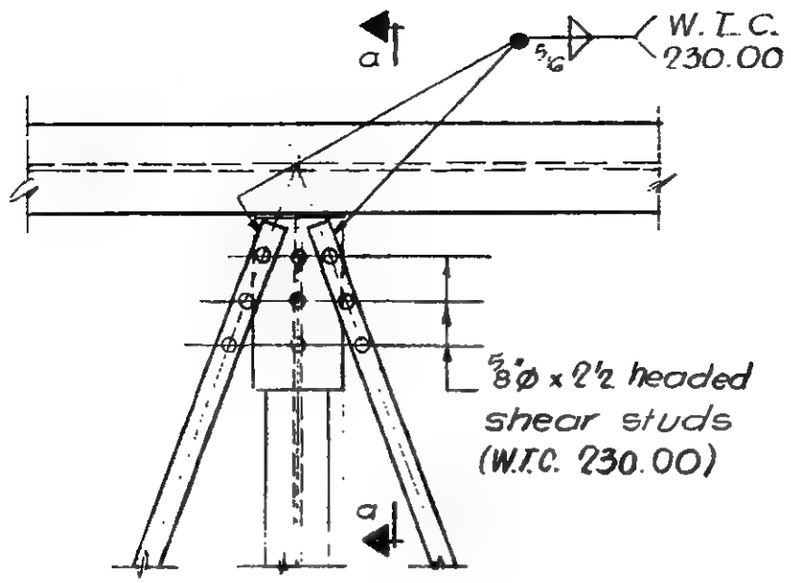

Plan

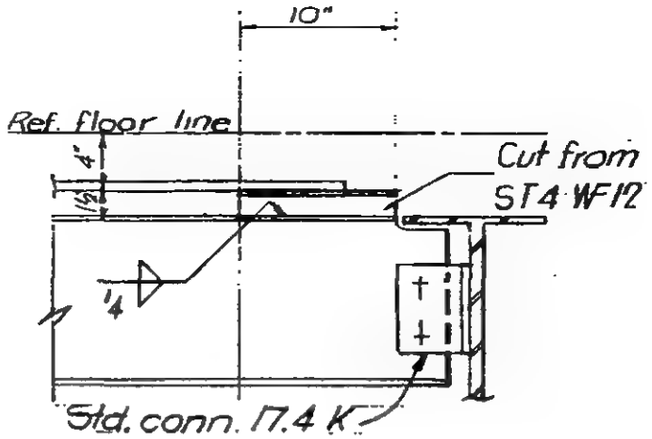

Section a-a

Detail HH

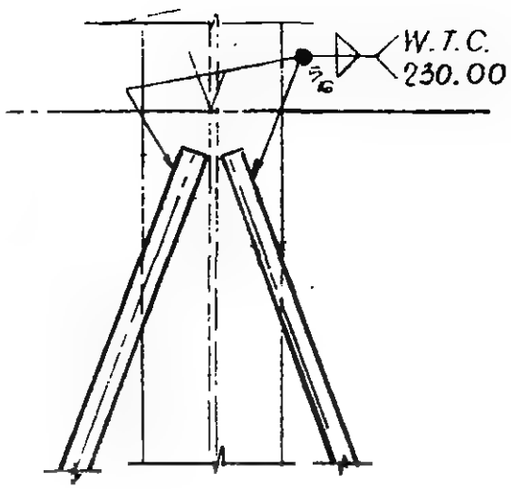

Detail JJ

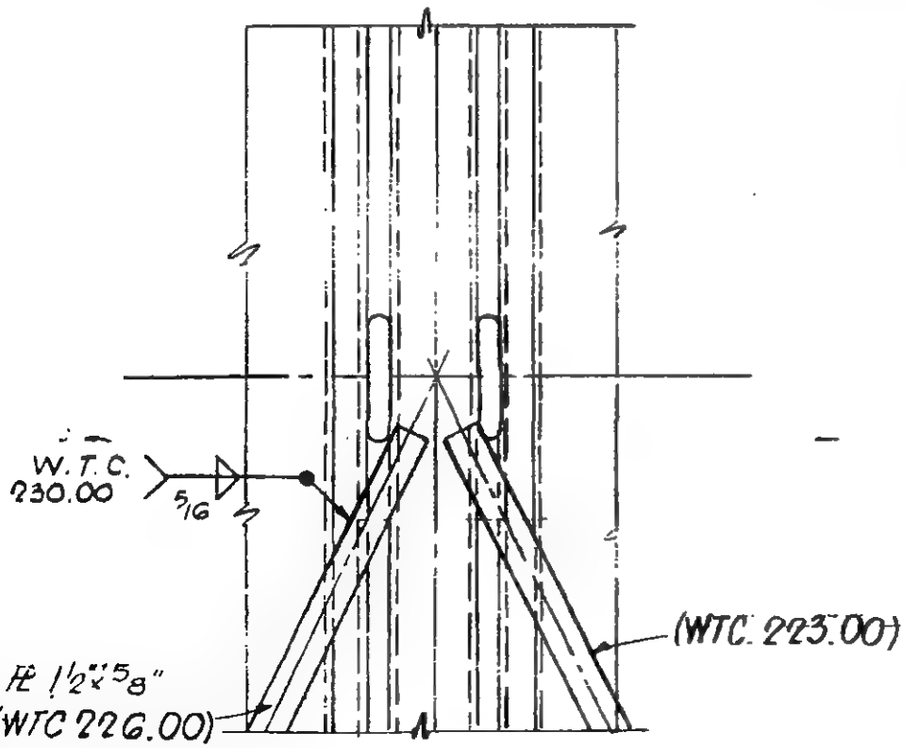

Detail KK (as shown
Detail KKK (opp. hand)

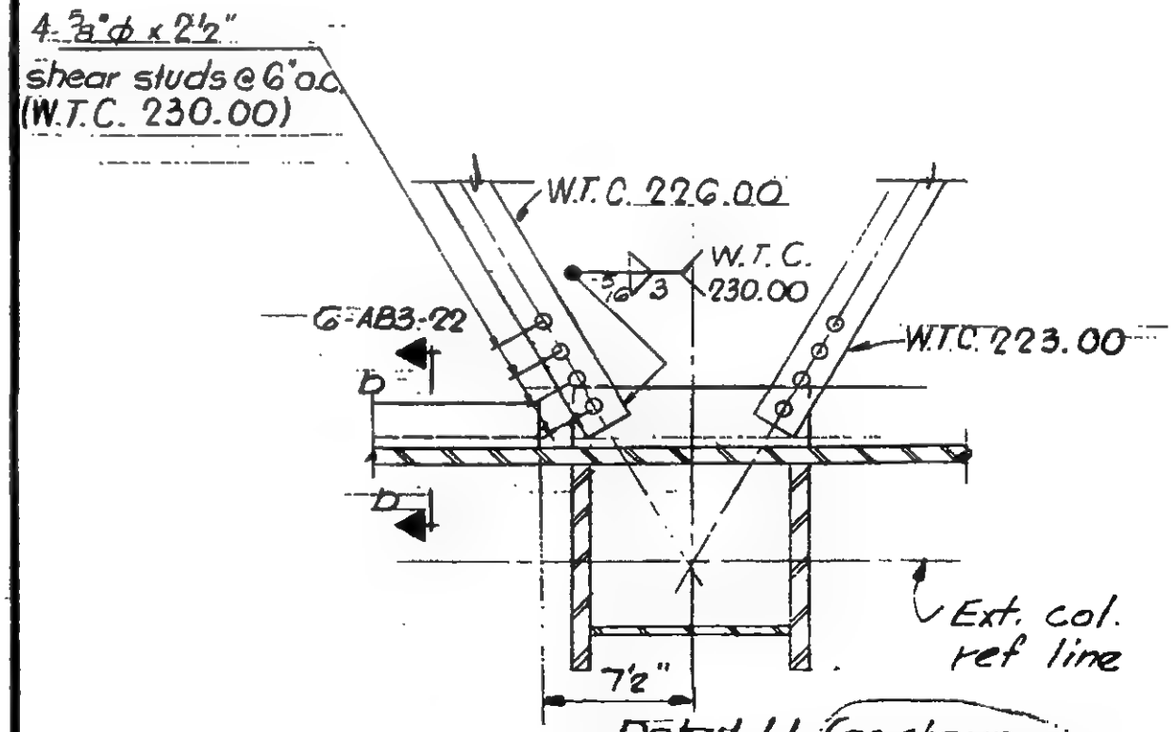

Detail LL (as shown
Detail LLL (opp hand)

G-AB3-2L

LICENSED PROFESSIONAL ENGINEER
LESLIE E. ROBERTSON
No. 34360
STATE OF NEW YORK

SKILLING - HELLE - CHRISTIANSEN - ROBERTSON Structural & Civil Engineers

PROJECT THE WORLD TRADE CENTER | TITLE HORIZONTAL TRUSS - DETAILS PP & QQ | DATE 12-20-67

REVISIONS

8-29-68

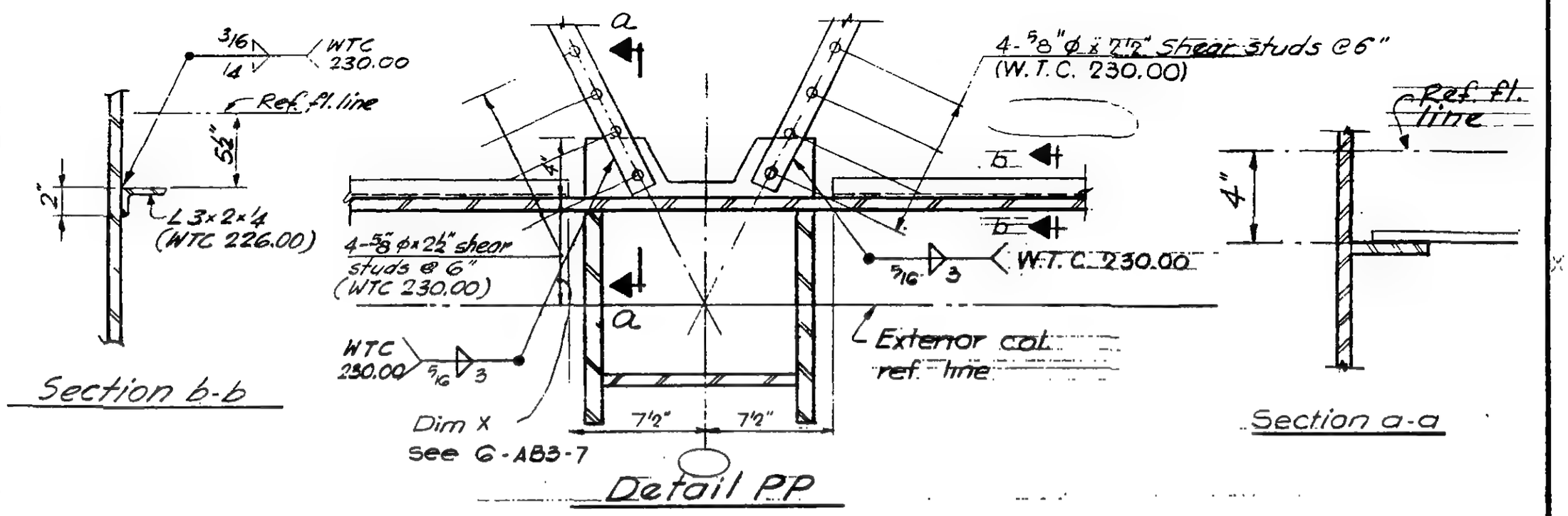

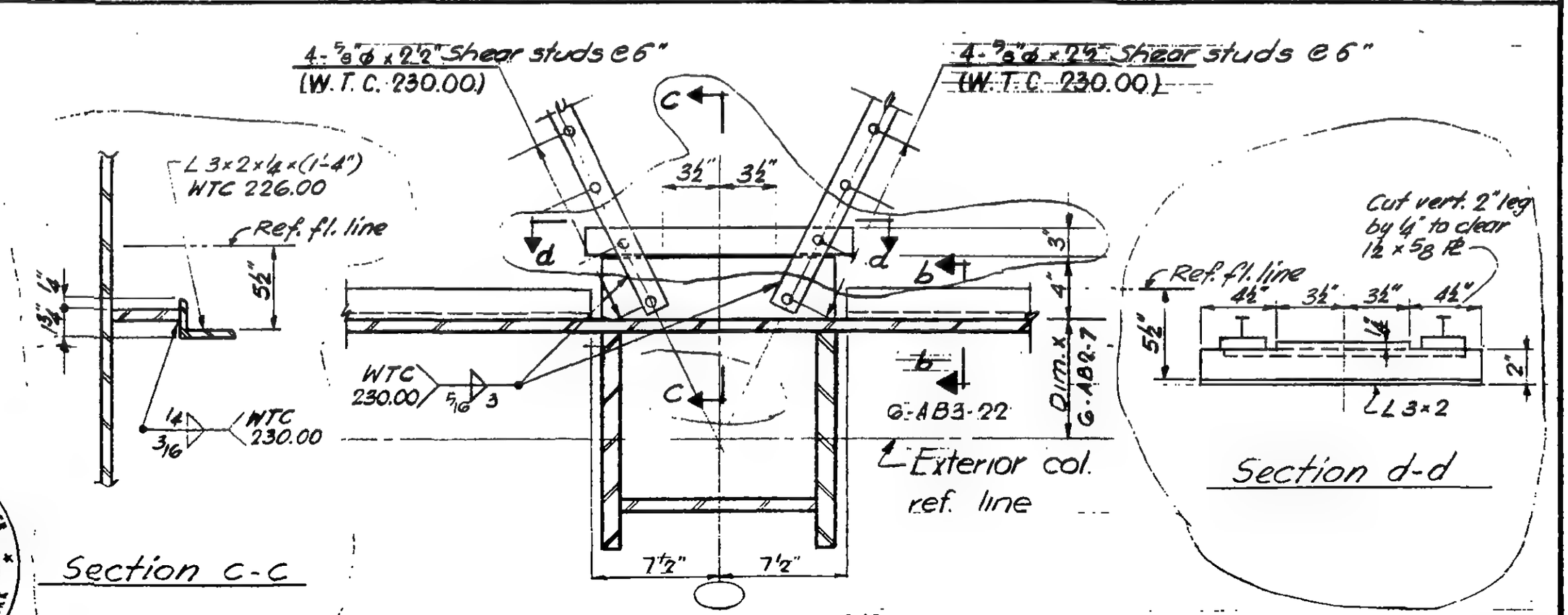

LICENSED PROFESSIONAL ENGINEER
LESLIE E. ROBERTSON
No. 34360
UNIVERSITY OF THE STATE OF NEW YORK

G-AB3-22

SKILLING, HELLE, CHRISTIANSEN, ROBERTSON — Structural & Civil Engineers

PROJECT THE WORLD TRADE CENTER | TITLE HORIZONTAL TRUSS - DETAILS R.R. SS | DATE 7-19-68

REVISIONS

8-29-68

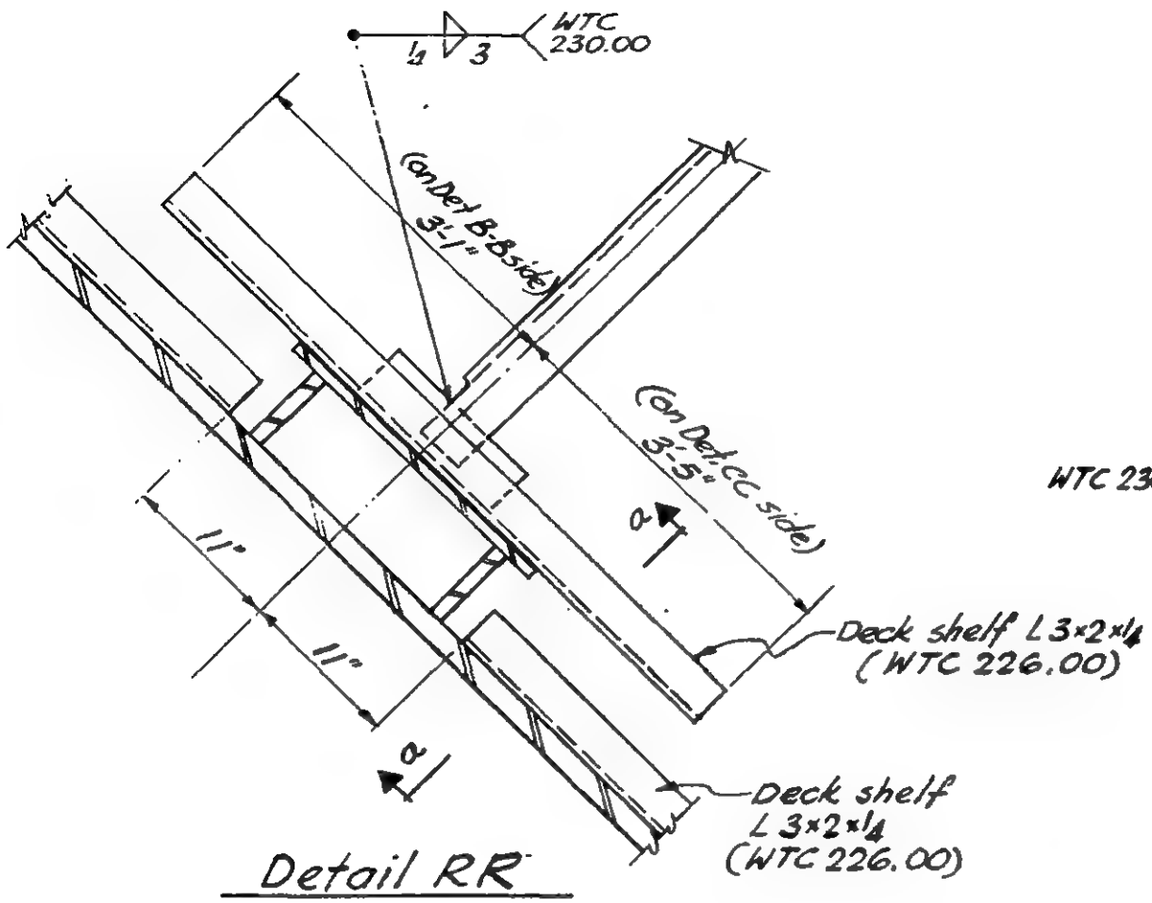

Detail RR

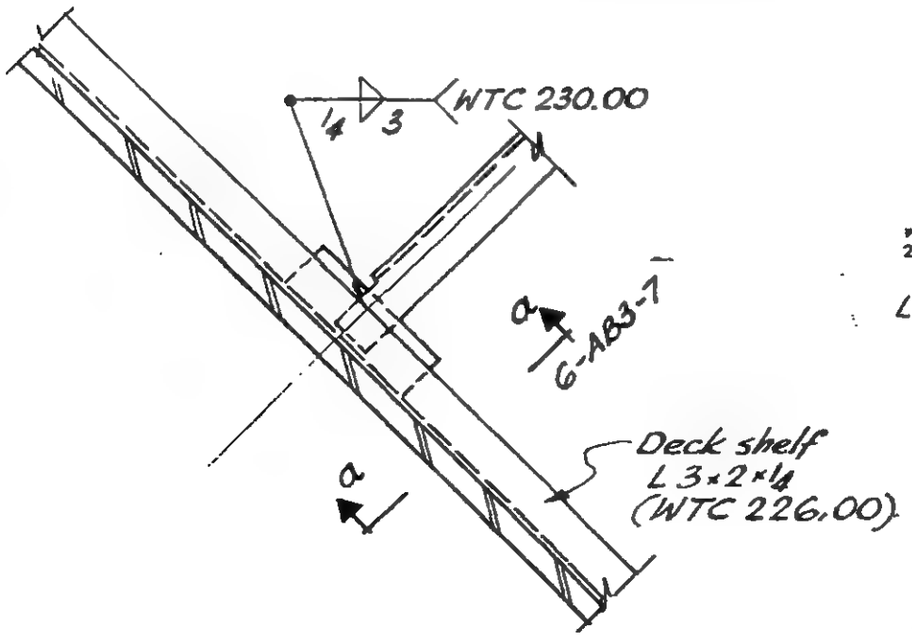

Detail SS

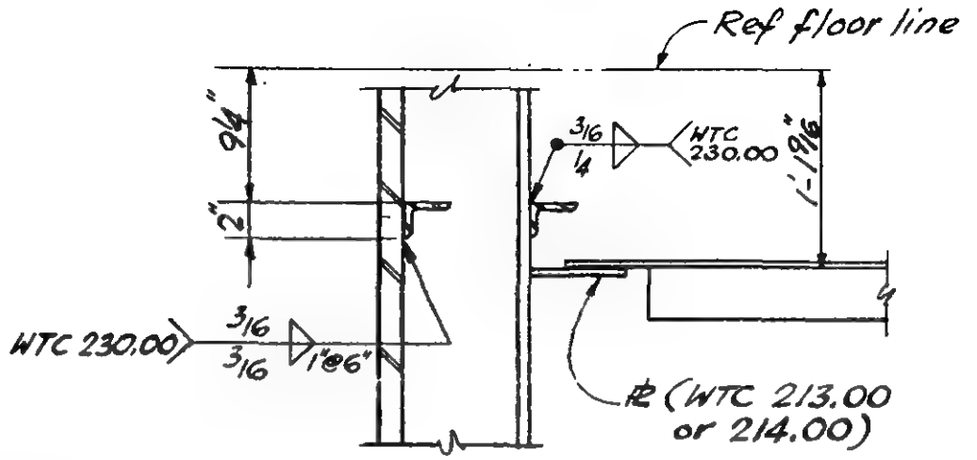

Section a-a

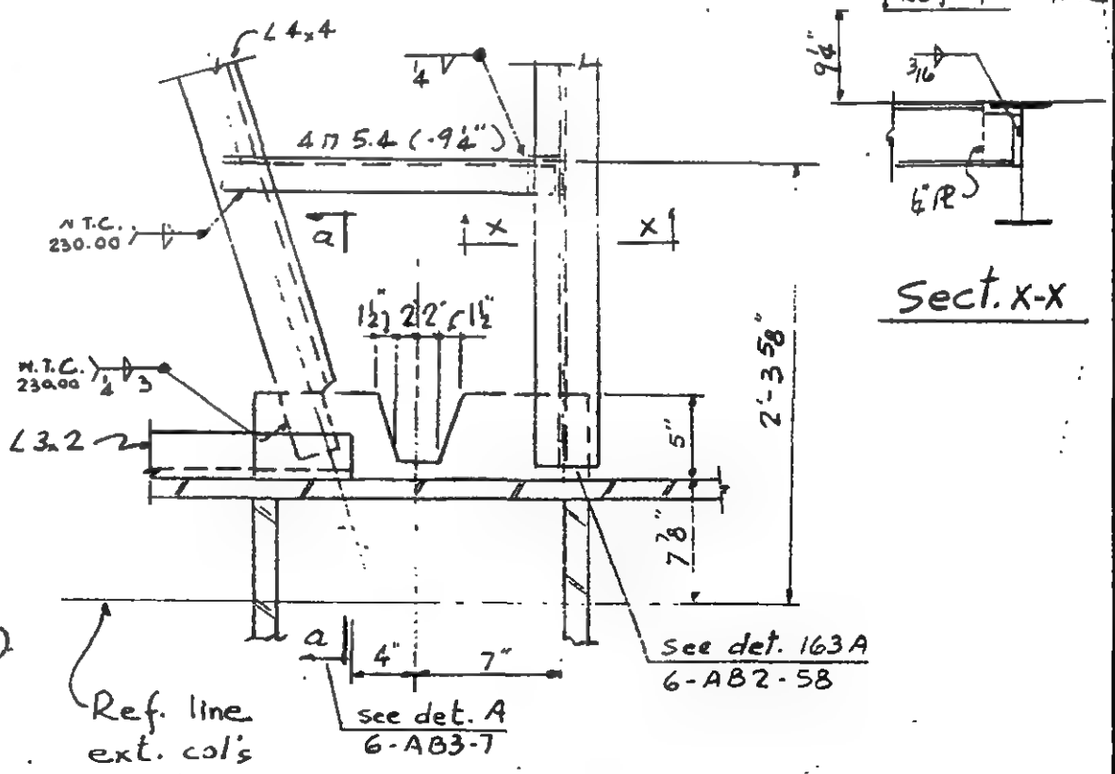

Detail XX

Sect. x-x

LICENSED PROFESSIONAL ENGINEER — LESLIE E. ROBERTSON — No. 34360 — UNIVERSITY OF THE STATE OF NEW YORK

DESIGNED

DRAWN

REVIEWED

6-AB3-23

SKILLING, HELLE, CHRISTIANSEN, ROBERTSON — Structural & Civil Engineers

PROJECT THE WORLD TRADE CENTER | TITLE HORIZONTAL TRUSS - DETAIL TT | DATE 8-29-68

REVISIONS

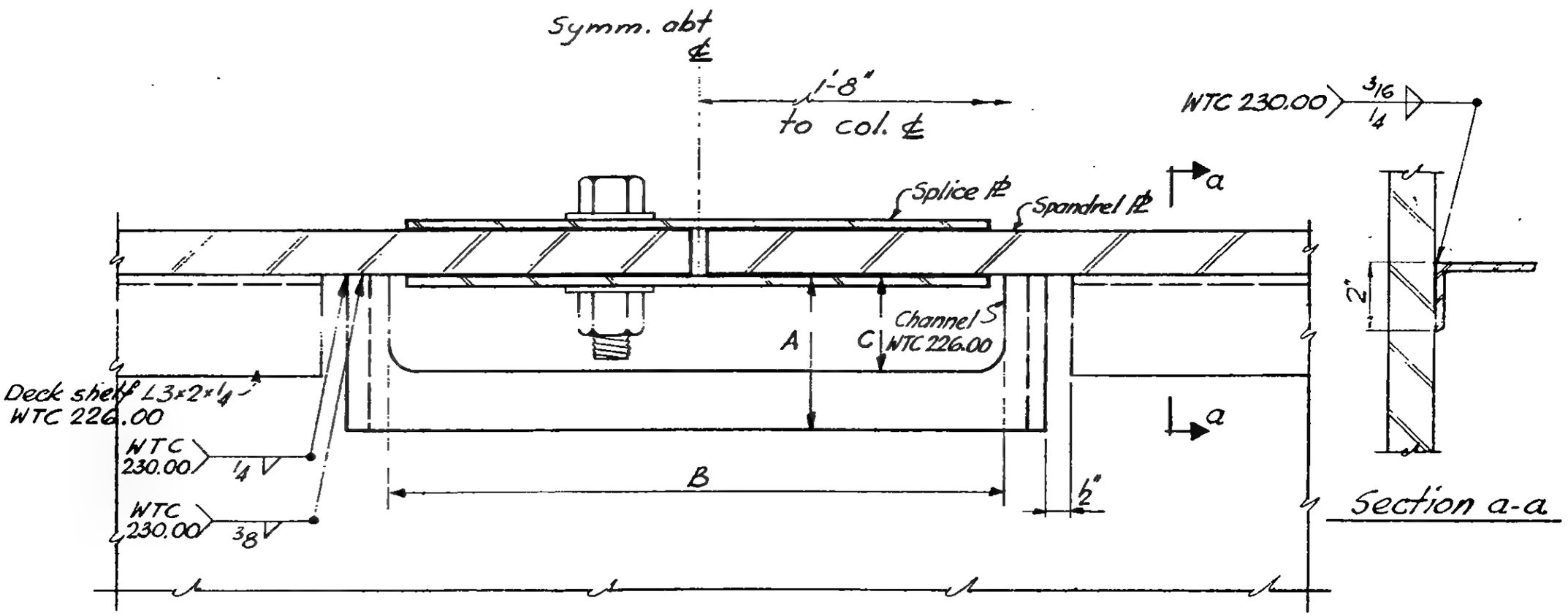

Floor	Channel size	A	B	C
9	18 ⌐ 42.7	$4\frac{3}{4}$"	$15\frac{3}{8}$"	$2\frac{3}{4}$"
41, 43, 44, to 48 49, 75 & 77	15 ⌐ 33.9	$4\frac{3}{4}$"	$9\frac{1}{2}$"	$2\frac{3}{4}$"
78 to 83 107, 108, 110	15 ⌐ 33.9	$4\frac{3}{8}$"	$7\frac{1}{2}$"	$2\frac{3}{8}$"

Note: Top of steel of L same as deck shelf L 3x2

Detail TT

DESIGNED

DRAWN

REVIEWED

G-AB3-24

SKILLING, HELLE, CHRISTIANSEN, ROBERTSON — Structural & Civil Engineers

PROJECT: THE WORLD TRADE CENTER | TITLE: HORIZONTAL TRUSS - DETAIL UU & WW | DATE: 8-29-68

REVISIONS

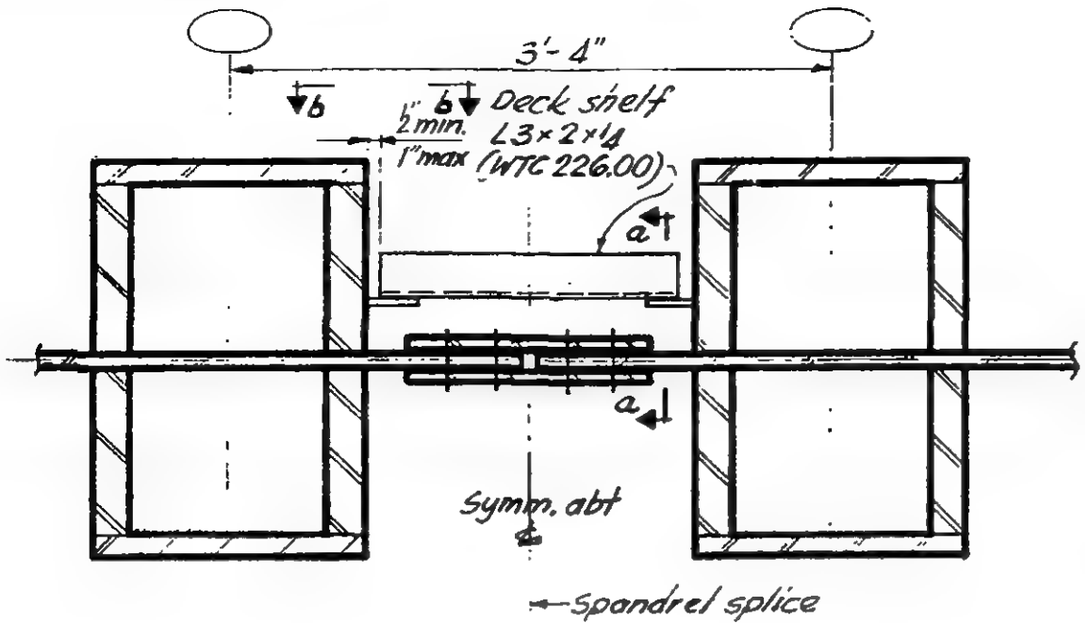

Plan

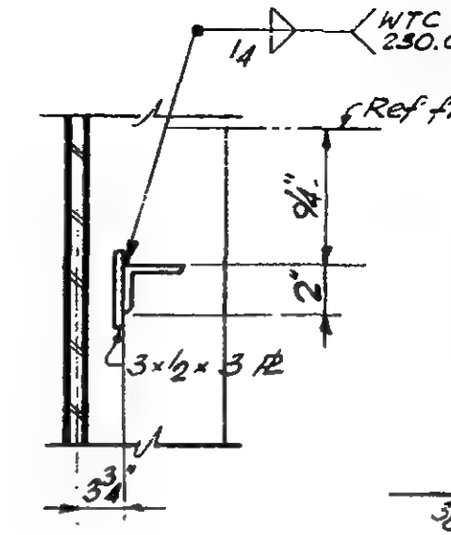

Section a-a

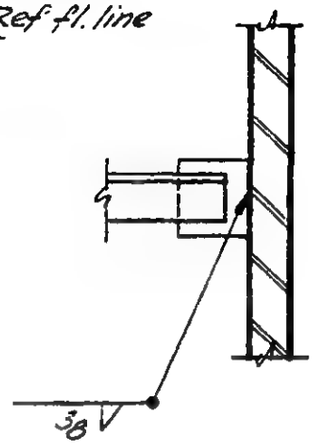

Section b-b

Detail UU

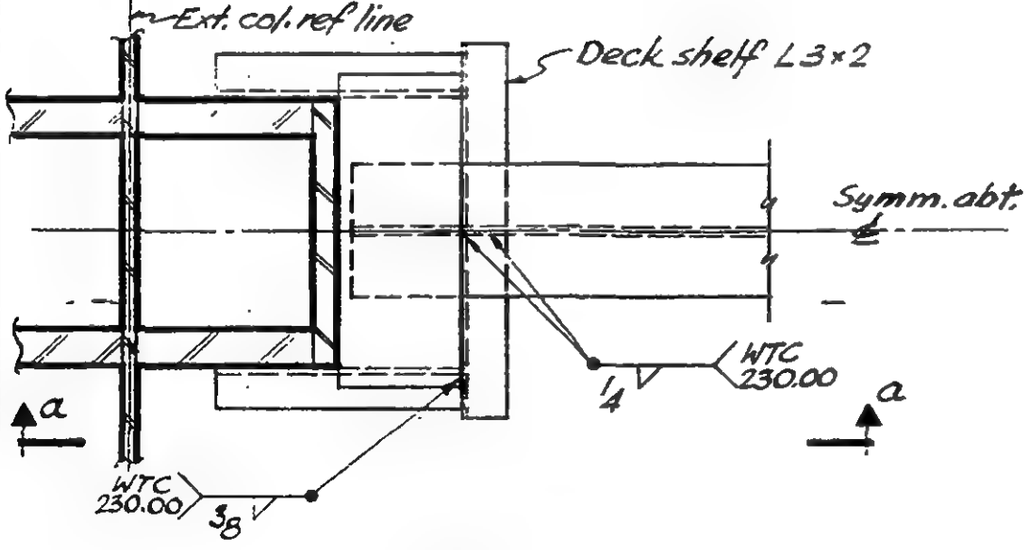

Plan

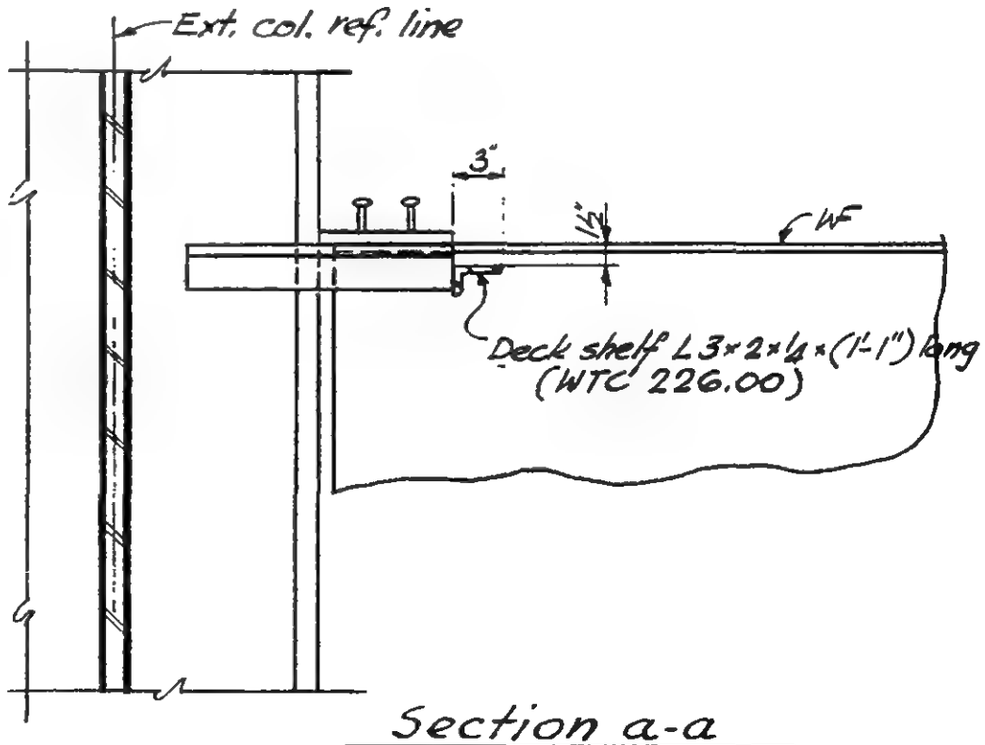

Section a-a

Note: Det. WW to be used in conjunction with Details 6-AB2-55 & 6-AB2-56

Detail WW

DESIGNED

DRAWN

REVIEWED

6-AB3-25

WORTHINGTON, SKILLING, HELLE & JACKSON — Civil & Structural Engineers

PROJECT THE WORLD TRADE CENTER | TITLE BEAM FLOOR BRIDGING TYPES B1 THRU B4 | DATE 12-20-67

REVISIONS

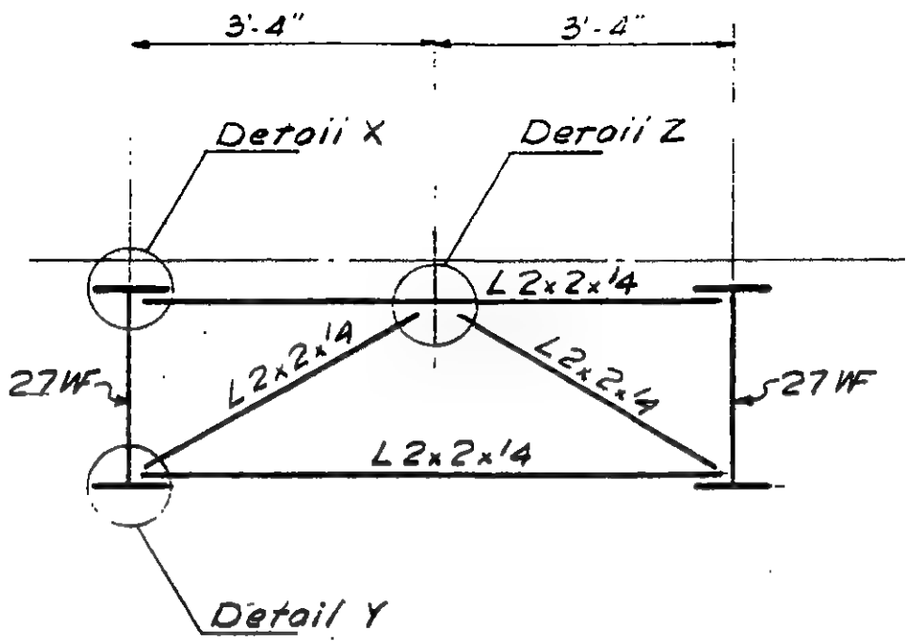

B1

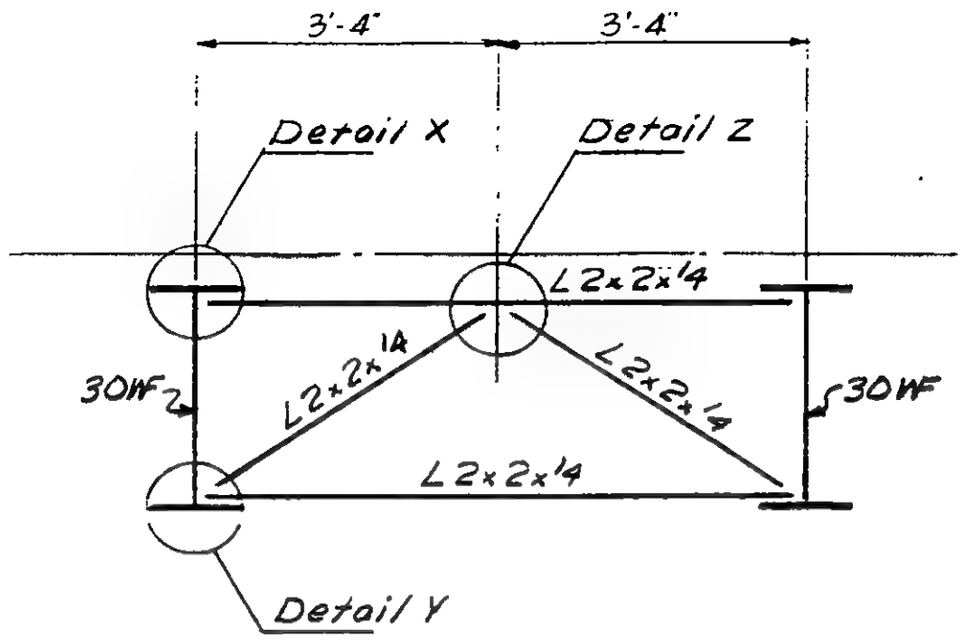

B2

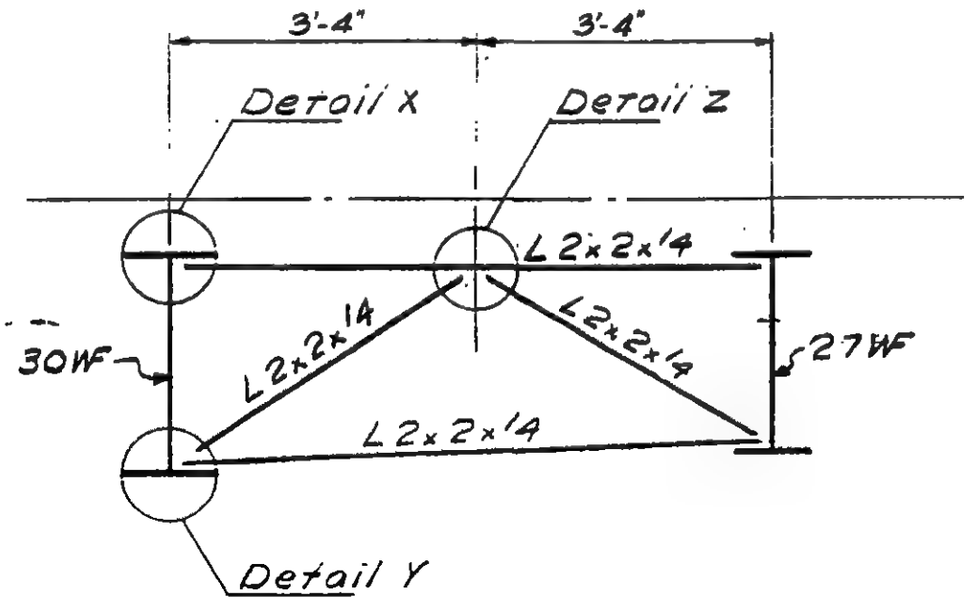

B3

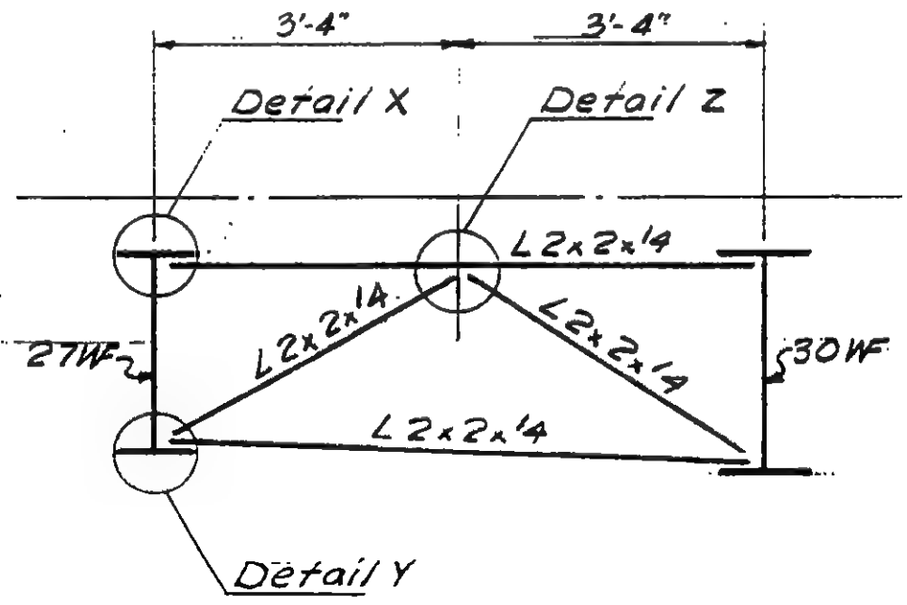

B4

LICENSED PROFESSIONAL ENGINEER
LESLIE E. ROBERTSON
No. 34360
CITY OF THE STATE OF NEW YORK

G-AB3-30

WORTHINGTON, SKILLING, HELLE & JACKSON — Civil & Structural Engineers

PROJECT: THE WORLD TRADE CENTER | TITLE: BEAM FLOOR BRIDGING TYPES B5 THRU B8 | DATE: 12-20-67

REVISIONS

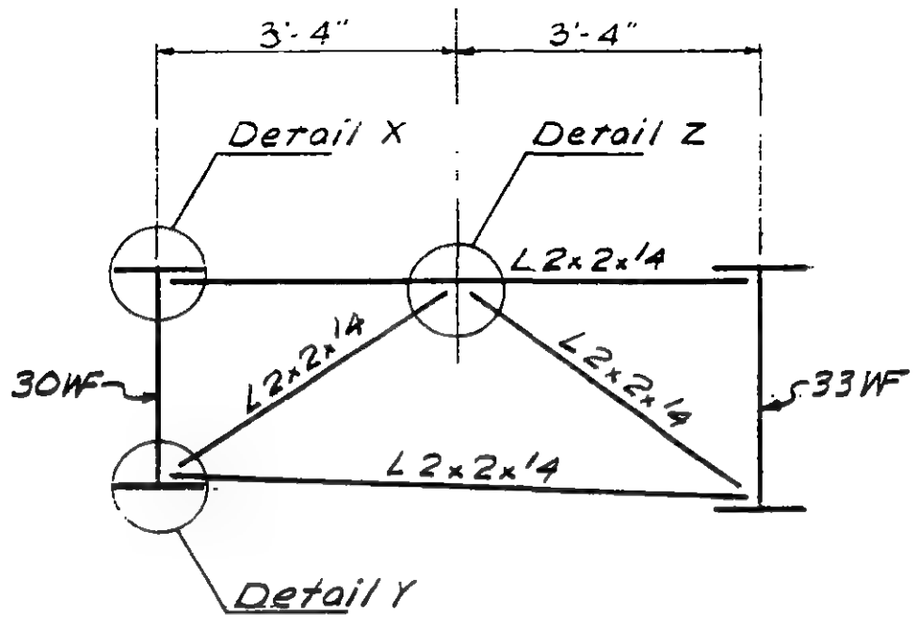

B5

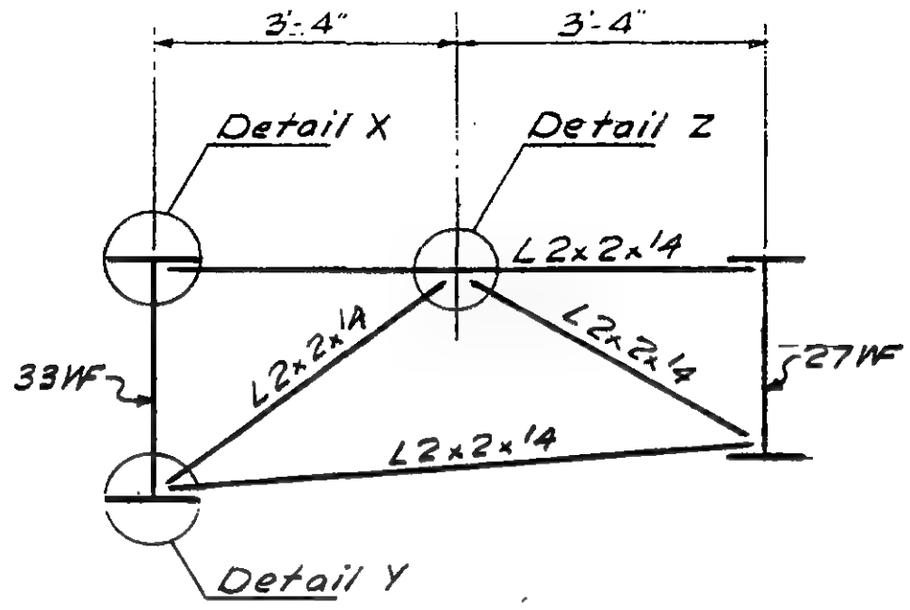

B6

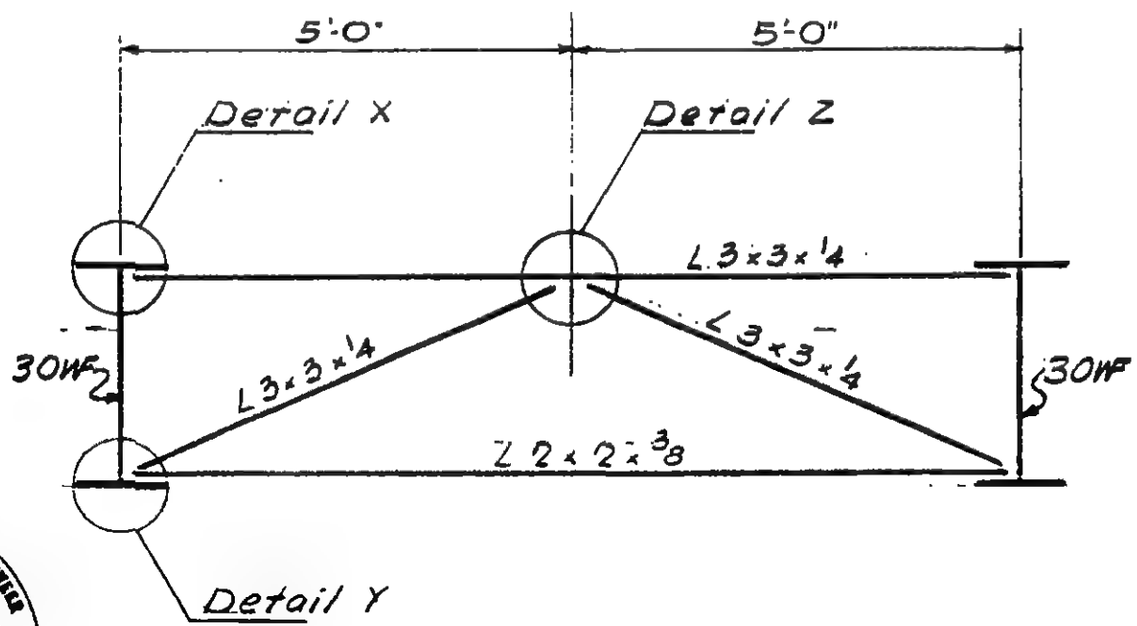

B7

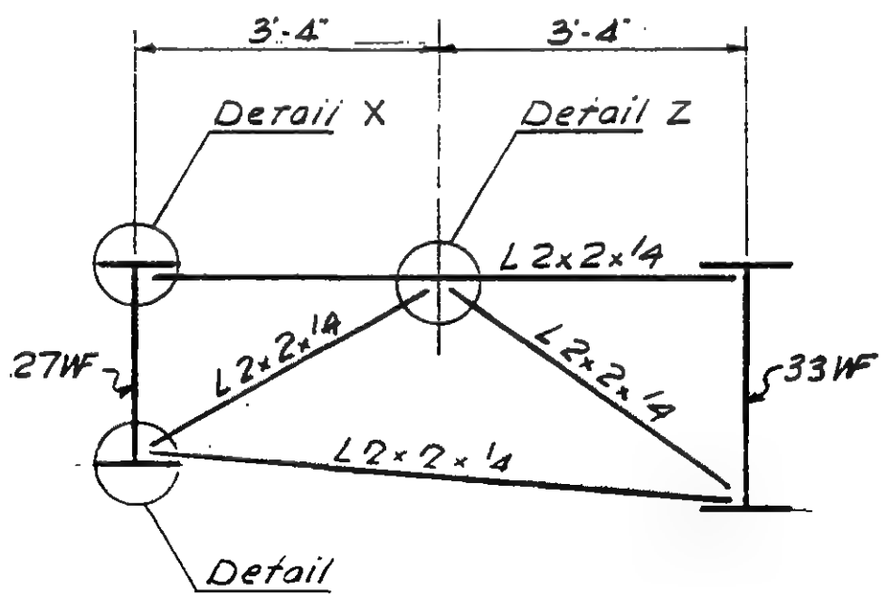

B8

LICENSED PROFESSIONAL ENGINEER
LESLIE E. ROBERTSON
No. 34360
STATE OF NEW YORK

6-AB3-31

WORTHINGTON, SKILLING, HELLE & JACKSON — Civil & Structural Engineers

PROJECT: THE WORLD TRADE CENTER | TITLE: BEAM FLOOR BRIDGING TYPES B9 THRU B12 | DATE: 12-20-67

REVISIONS

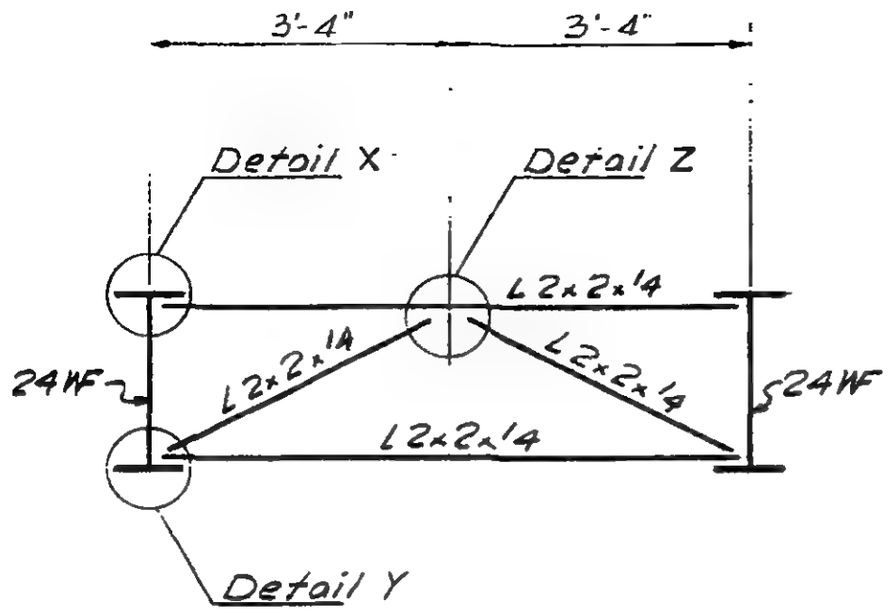

B9

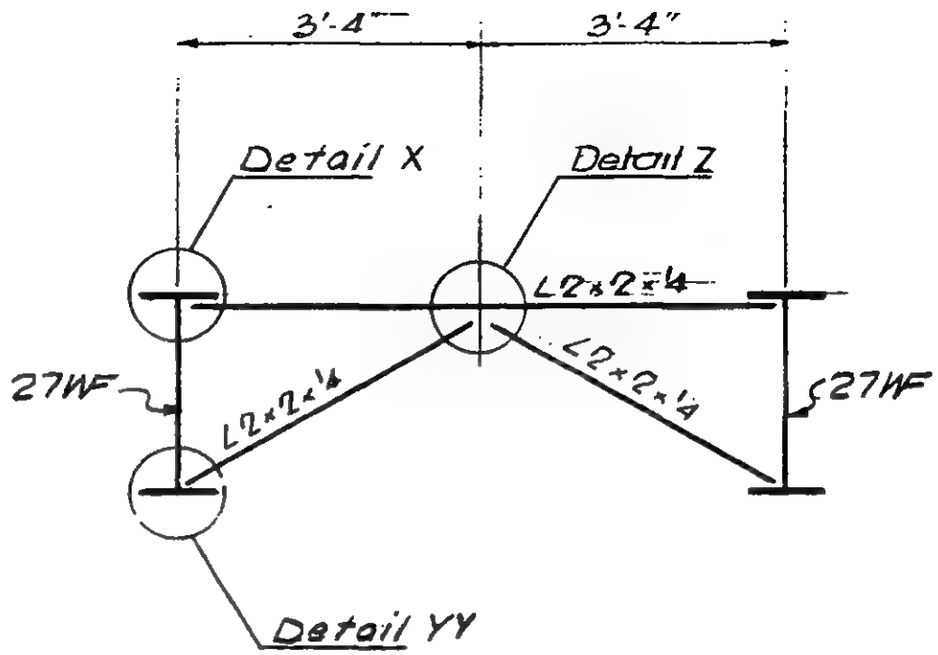

B10

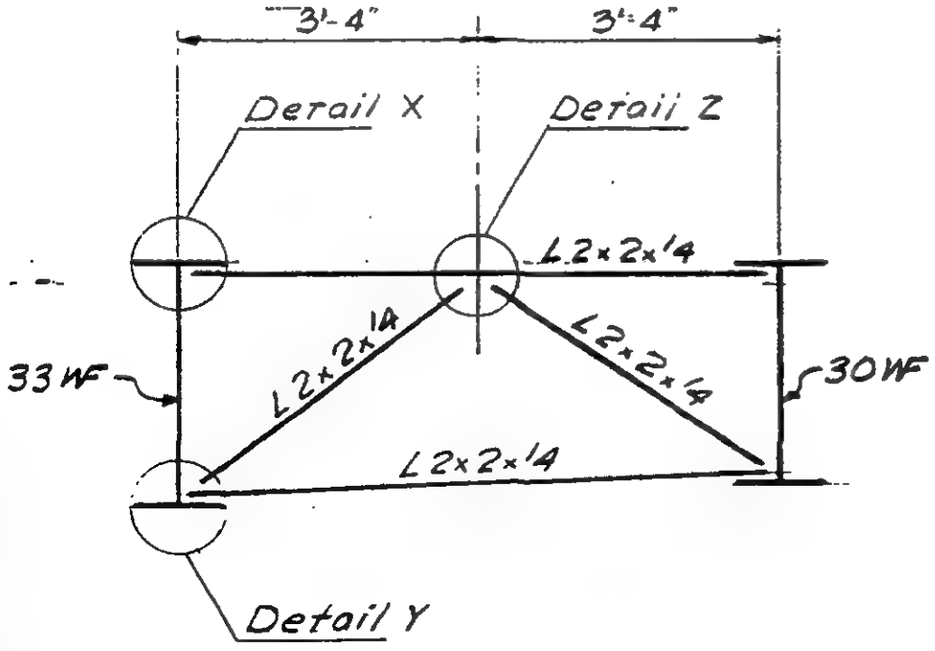

B11

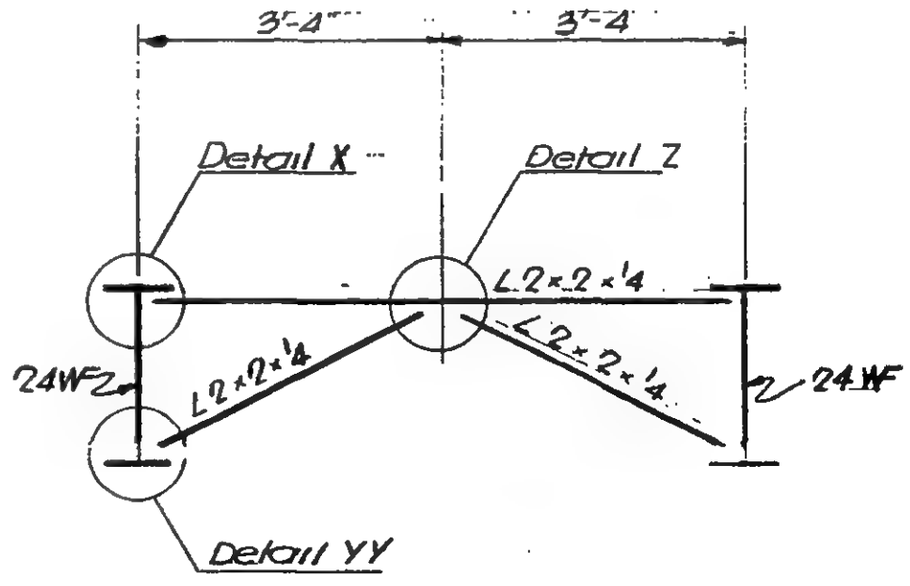

B12

LICENSED PROFESSIONAL ENGINEER LESLIE E. ROBERTSON No. 34260 CITY OF NEW YORK STATE OF NEW YORK

6-AB3-32

WORTHINGTON, SKILLING, HELLE & JACKSON — Civil & Structural Engineers

PROJECT THE WORLD TRADE CENTER | TITLE BEAM FLOOR BRIDGING DETAILS | DATE 12-20-67

REVISIONS

-24-68

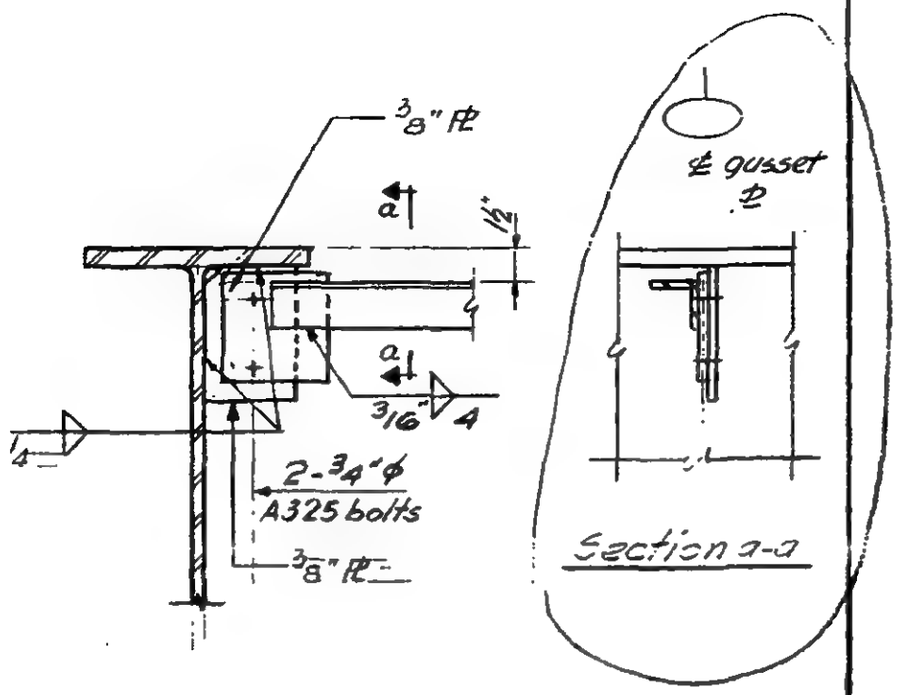

DETAIL X

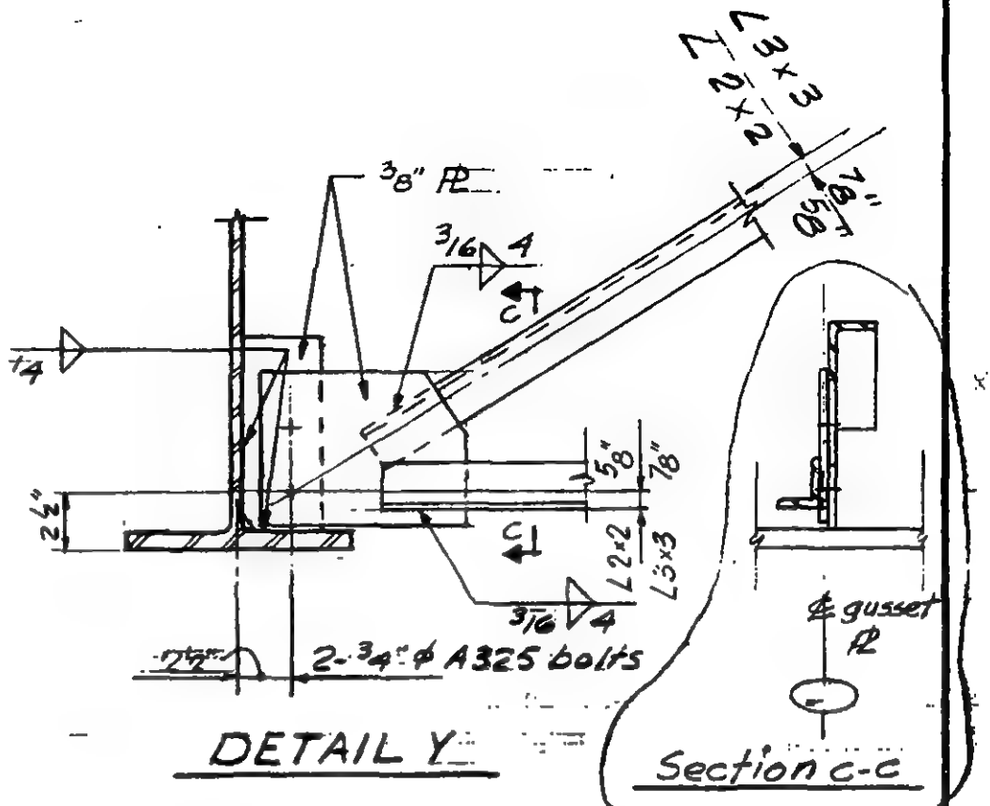

DETAIL Y

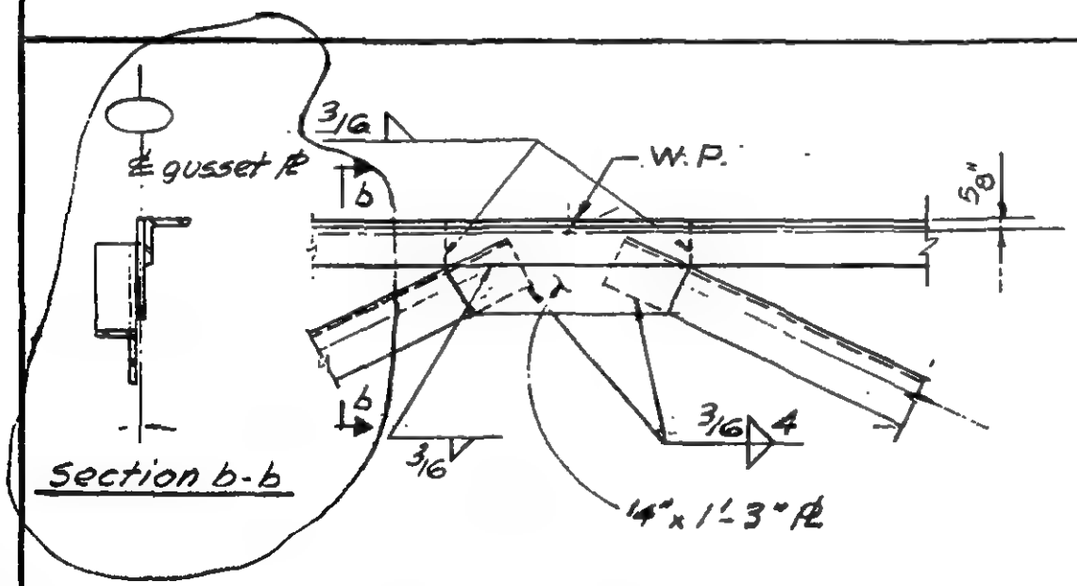

DETAIL Z

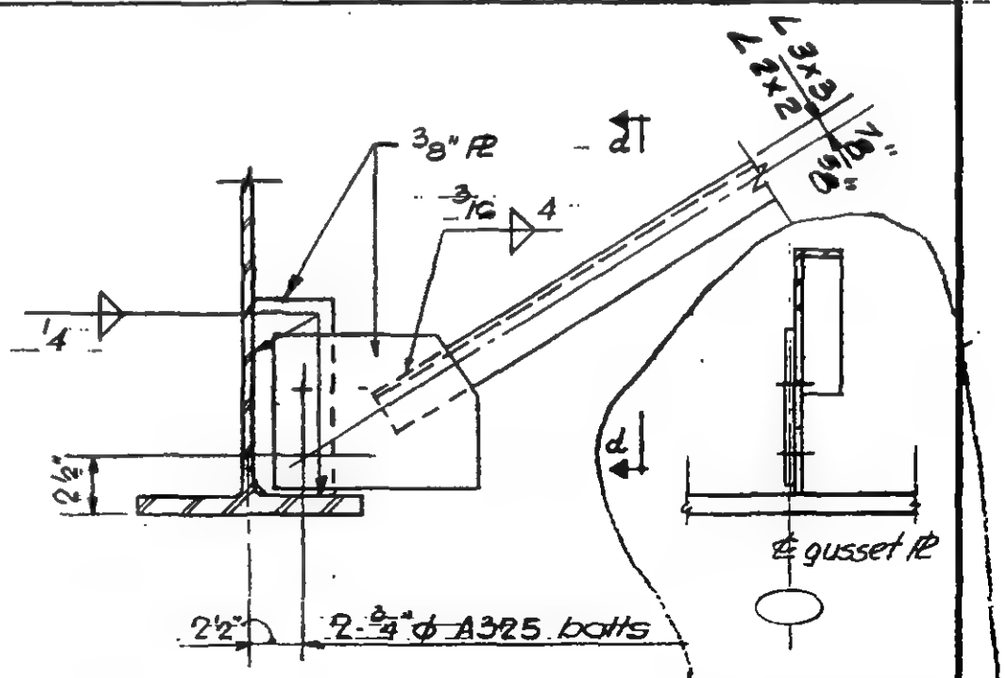

DETAIL YY

LICENSED PROFESSIONAL ENGINEER
LESLIE E. ROBERTSON
No. 34360
IN THE STATE OF NEW YORK

C-AB3-35

SKILLING, HELLE, CHRISTIANSEN, ROBERTSON — Structural & Civil Engineers

PROJECT THE WORLD TRADE CENTER | TITLE HORIZONTAL TRUSSES H 11 & H 13 | DATE 8-17-68

REVISIONS

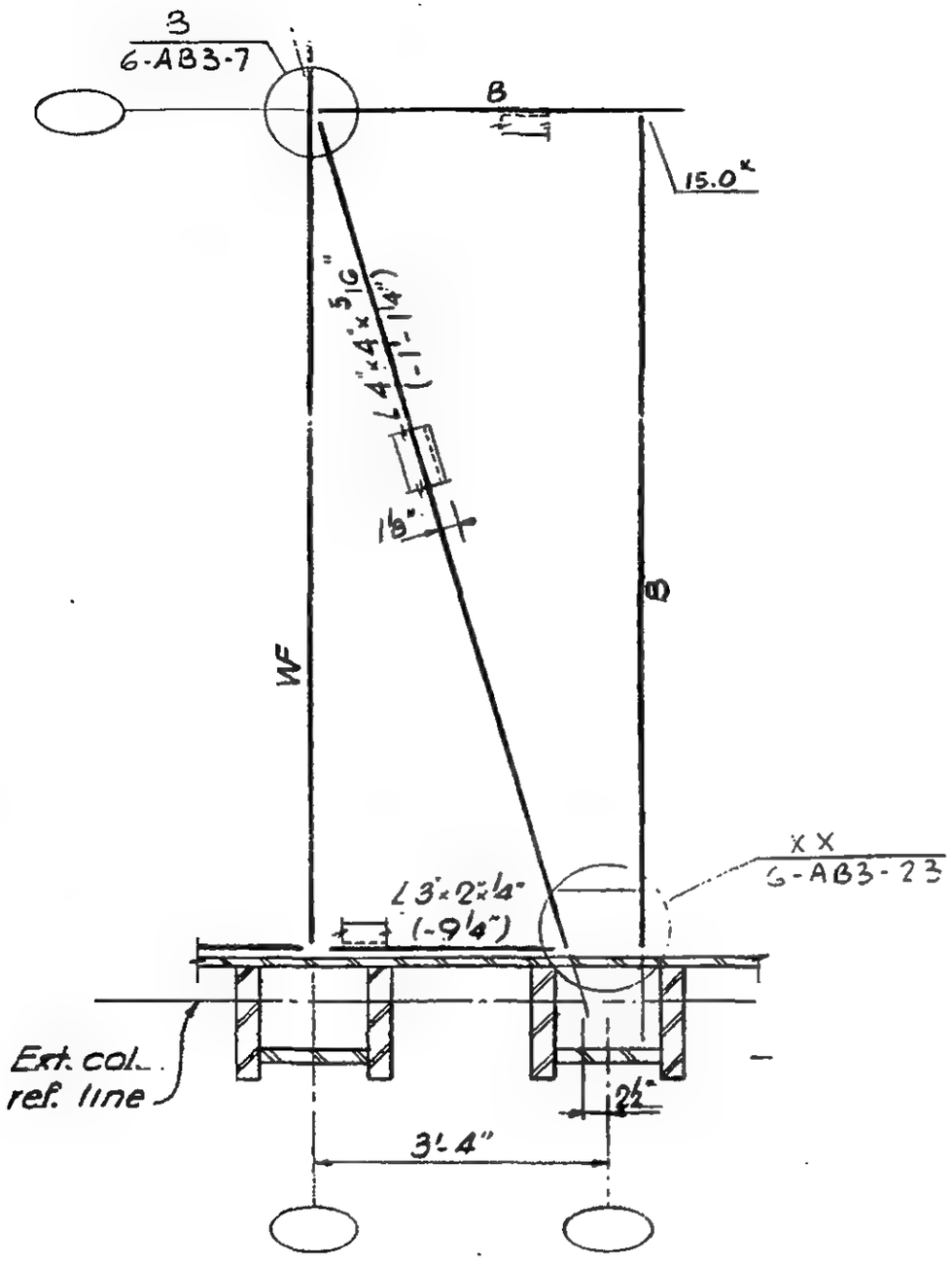

H 11

H 13 opp. hand

LICENSED PROFESSIONAL ENGINEER — LESLIE E. ROBERTSON — No. 34360 — STATE OF NEW YORK

DESIGNED

DRAWN

REVIEWED

G-AB3-34

SKILLING, HELLE, CHRISTIANSEN, ROBERTSON — Structural & Civil Engineers

PROJECT THE WORLD TRADE CENTER | TITLE HORIZONTAL TRUSSES H16 & H17 | DATE 8-17-68

REVISIONS

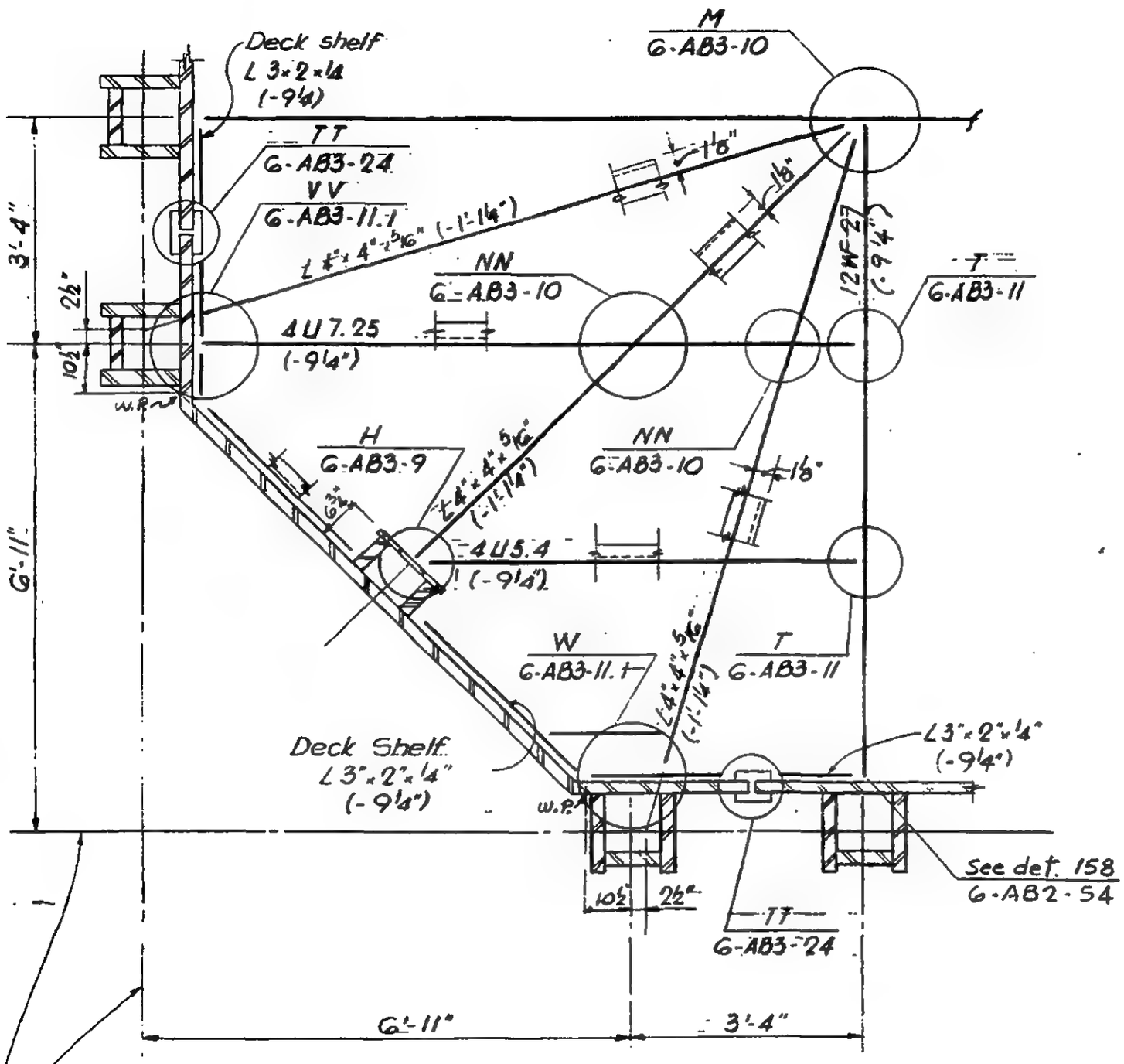

H 16

H 17 opp. hand

LICENSED PROFESSIONAL ENGINEER — LESLIE E. ROBERTSON — No. 34360 — UNIVERSITY OF THE STATE OF NEW YORK

DESIGNED

DRAWN

REVIEWED

G-AB3-35

SKILLING, HELLE, CHRISTIANSEN, ROBERTSON — Structural & Civil Engineers

PROJECT THE WORLD TRADE CENTER | TITLE HORIZONTAL TRUSSES H18, H19 | DATE 8-17-68

REVISIONS

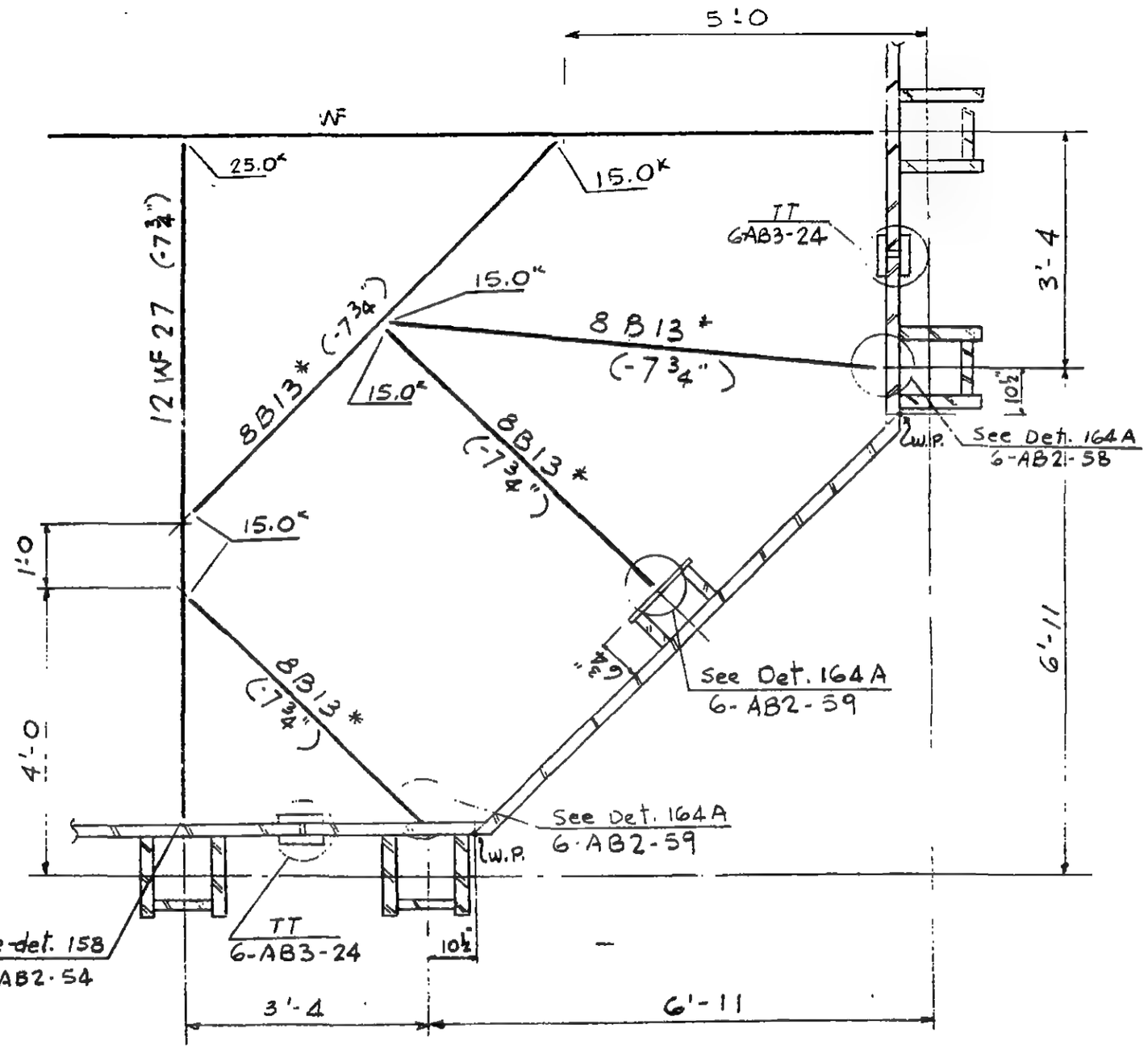

* 10 studs per beam, ¾"ϕ x 3" equally spaced.

H 18

H 19 opp. hand

LICENSED PROFESSIONAL ENGINEER — LESLIE E. ROBERTSON — No. 34360 — UNIVERSITY OF THE STATE OF NEW YORK

DESIGNED

DRAWN

REVIEWED

6-AB3-36

SKILLING, HELLE, CHRISTIANSEN, ROBERTSON — Structural & Civil Engineers

PROJECT: THE WORLD TRADE CENTER | TITLE: HORIZONTAL TRUSSES H40 & H41 | DATE: 1-10-69

REVISIONS

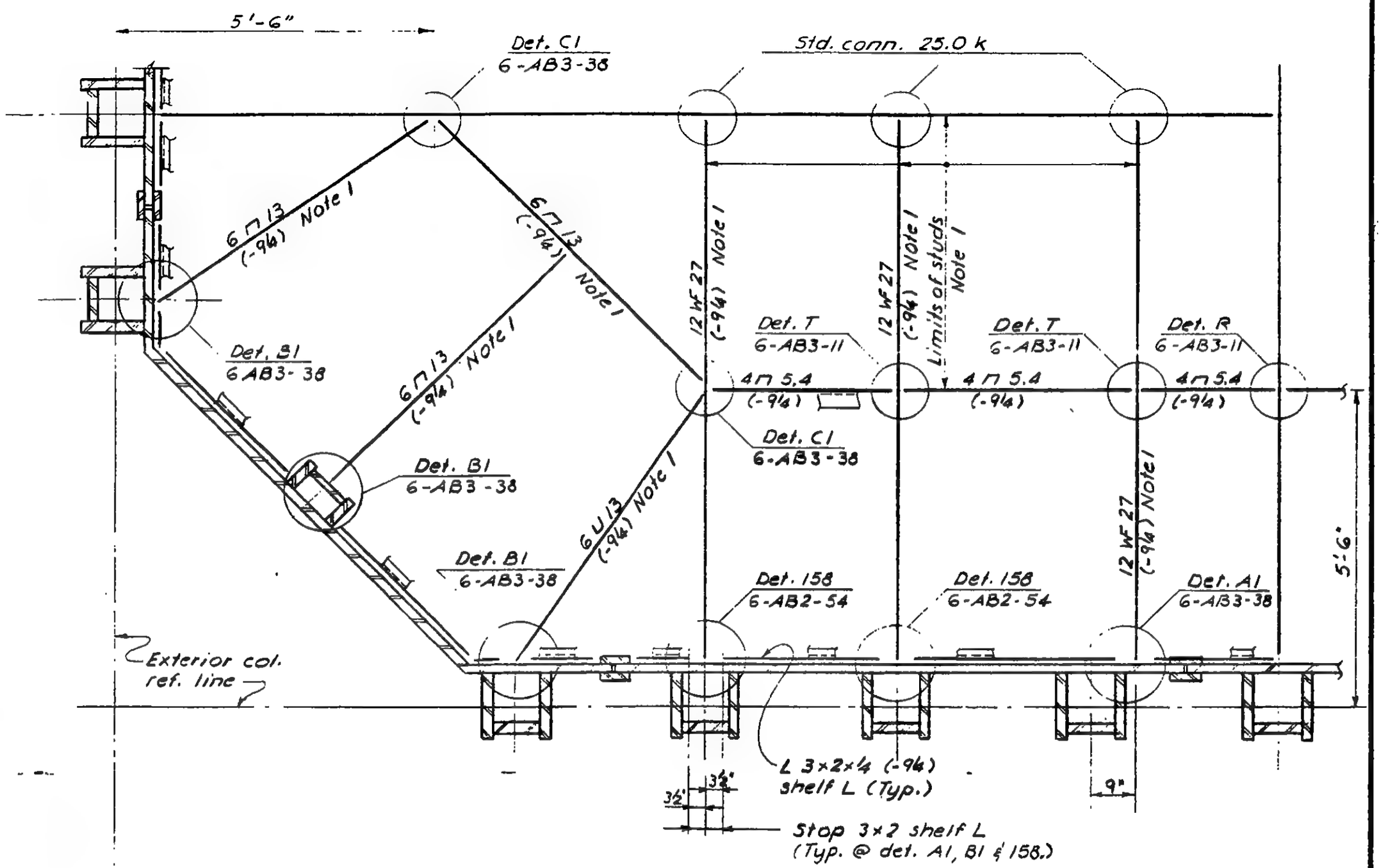

Notes:

1. Provide shear studs on top flange : ¾" ϕ x 3" at 6" c.c.

LICENSED PROFESSIONAL ENGINEER — LESLIE E. ROBERTSON — No. 34360 — UNIVERSITY OF THE STATE OF NEW YORK

DESIGNED

DRAWN

REVIEWED

6-AB3-37

SKILLING, HELLE, CHRISTIANSEN, ROBERTSON — Structural & Civil Engineers

PROJECT THE WORLD TRADE CENTER | TITLE HORIZONTAL TRUSS DETAILS | DATE 1-10-69

REVISIONS

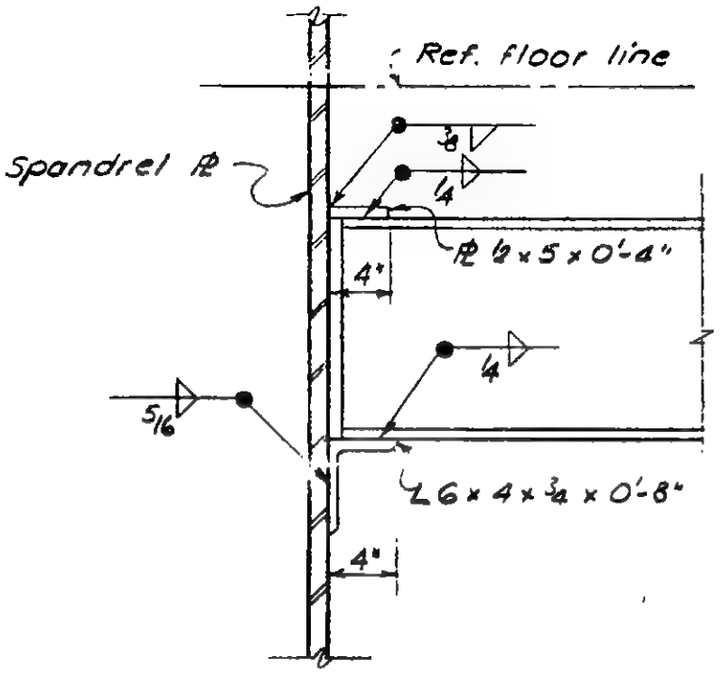

DETAIL A1

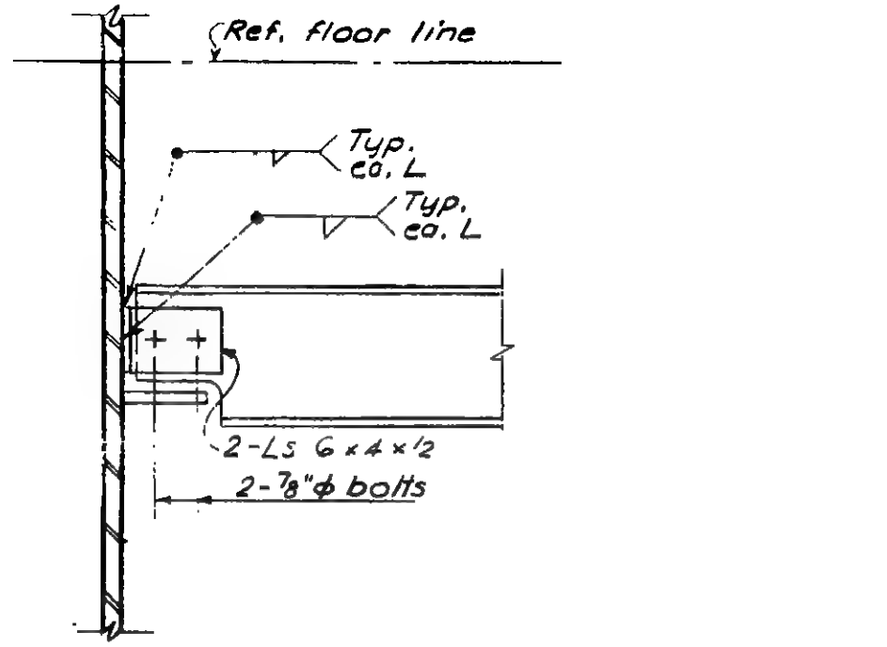

DETAIL B1

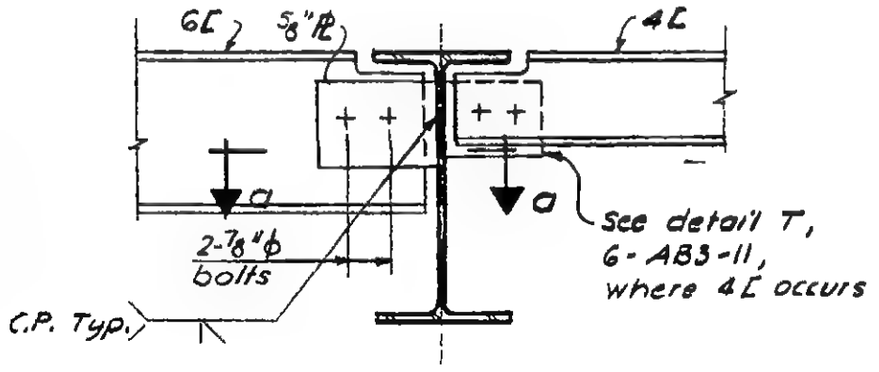

DETAIL C1

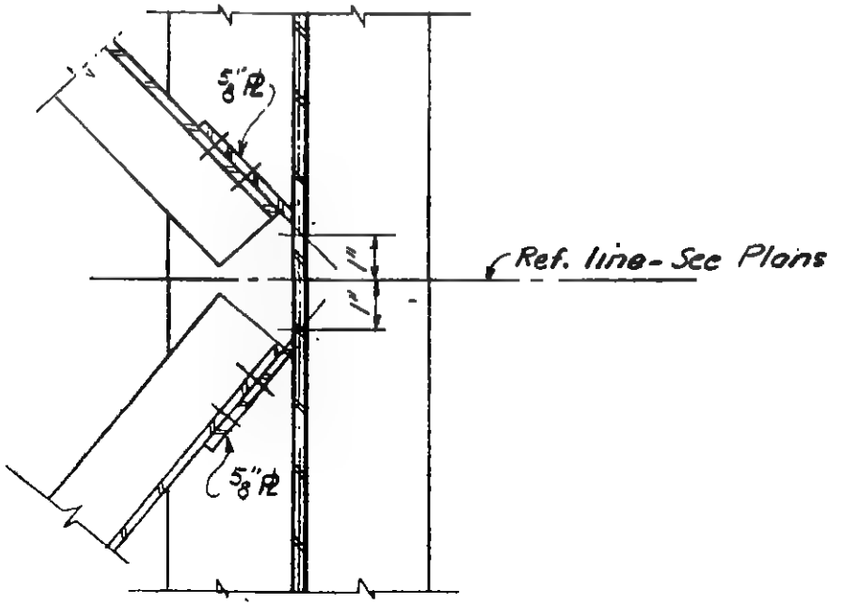

Section a-a

LICENSED PROFESSIONAL ENGINEER LESLIE E. ROBERTSON No 34960 UNIVERSITY OF THE STATE OF NEW YORK

DESIGNED

DRAWN

REVIEWED

6-AB3-38

SKILLING - HELLE - CHRISTIANSEN - ROBERTSON Structural & Civil Engineers

PROJECT: THE WORLD TRADE CENTER | TITLE: LOUVER WALL ELEVATIONS & DETAILS | DATE: 12-20-67

REVISIONS
1-3-69
2-3-69
3-3-69
4-1-69
Printed 5-1-69

GENERAL NOTES

INDEX

G-AB4-1	Index & General Notes	
G-AB4-2	Louver Wall 100 - Floors	7-9
G-AB4-3	Louver Wall 200 - Floors	7-9
G-AB4-4	Louver Wall 300 - Floors	7-9
G-AB4-5	Louver Wall 400 - Floors	7-9
G-AB4-6	Louver Wall 100 - Floors	41-43
G-AB4-7	Louver Wall 200 - Floors	41-43
G-AB4-8	Louver Wall 300 - Floors	41-43
G-AB4-9	Louver Wall 400 - Floors	41-43
G-AB4-10	Louver Wall 100 - Floors	75-77
G-AB4-11	Louver Wall 200 - Floors	75-77
G-AB4-12	Louver Wall 300 - Floors	75-77
G-AB4-13	Louver Wall 400 - Floors	75-77
G-AB4-14		
G-AB4-15		
G-AB4-16		
G-AB4-17		
G-AB4-18	Details	A, B
G-AB4-19	Details	C, D, E
G-AB4-20	Details	F, G
G-AB4-21	Details	H, J
G-AB4-22	Details	K, L
G-AB4-23	Details	M, N
G-AB4-24	Details	P, Q
G-AB4-25	Details	R, S
G-AB4-26	Details	T + V

LICENSED PROFESSIONAL ENGINEER LESLIE E. ROBERTSON No. 34360 STATE OF NEW YORK

86

G-AB4-1

WORTHINGTON, SKILLING, HELLE & JACKSON — Civil & Structural Engineers

PROJECT THE WORLD TRADE CENTER | TITLE LOUVER SUPPORTS - ELEVATION WALL 100 | DATE 12-20-67

REVISIONS

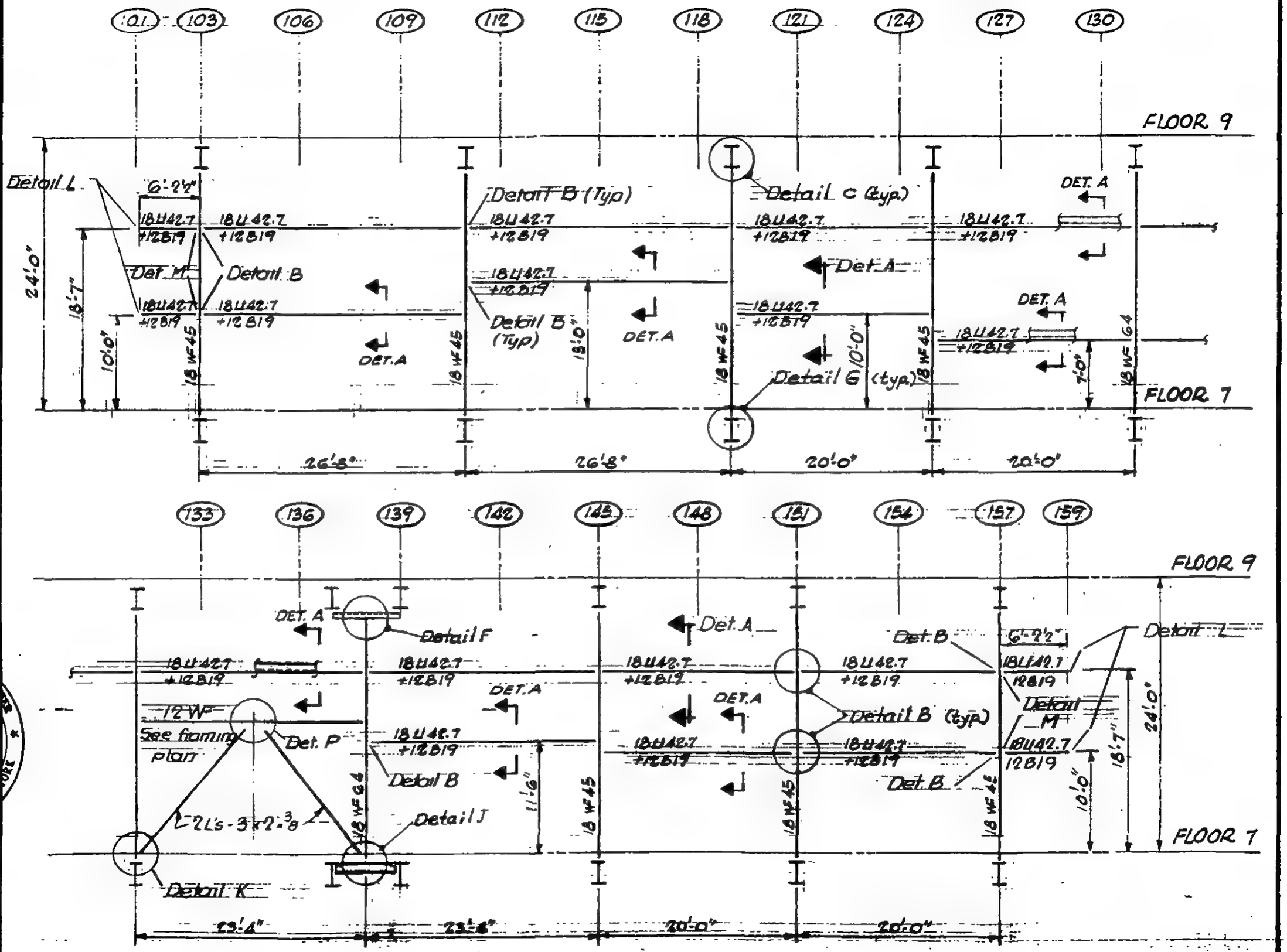

LICENSED PROFESSIONAL ENGINEER — LESLIE E. ROBERTSON — No. 34360 — UNIVERSITY OF THE STATE OF NEW YORK

G-AB4-9

WORTHINGTON, SKILLING, HELLE & JACKSON — Civil & Structural Engineers

PROJECT: THE WORLD TRADE CENTER | TITLE: LOUVER SUPPORTS - ELEVATION WALL 200 | DATE: 12-20-67

REVISIONS

11-29-68

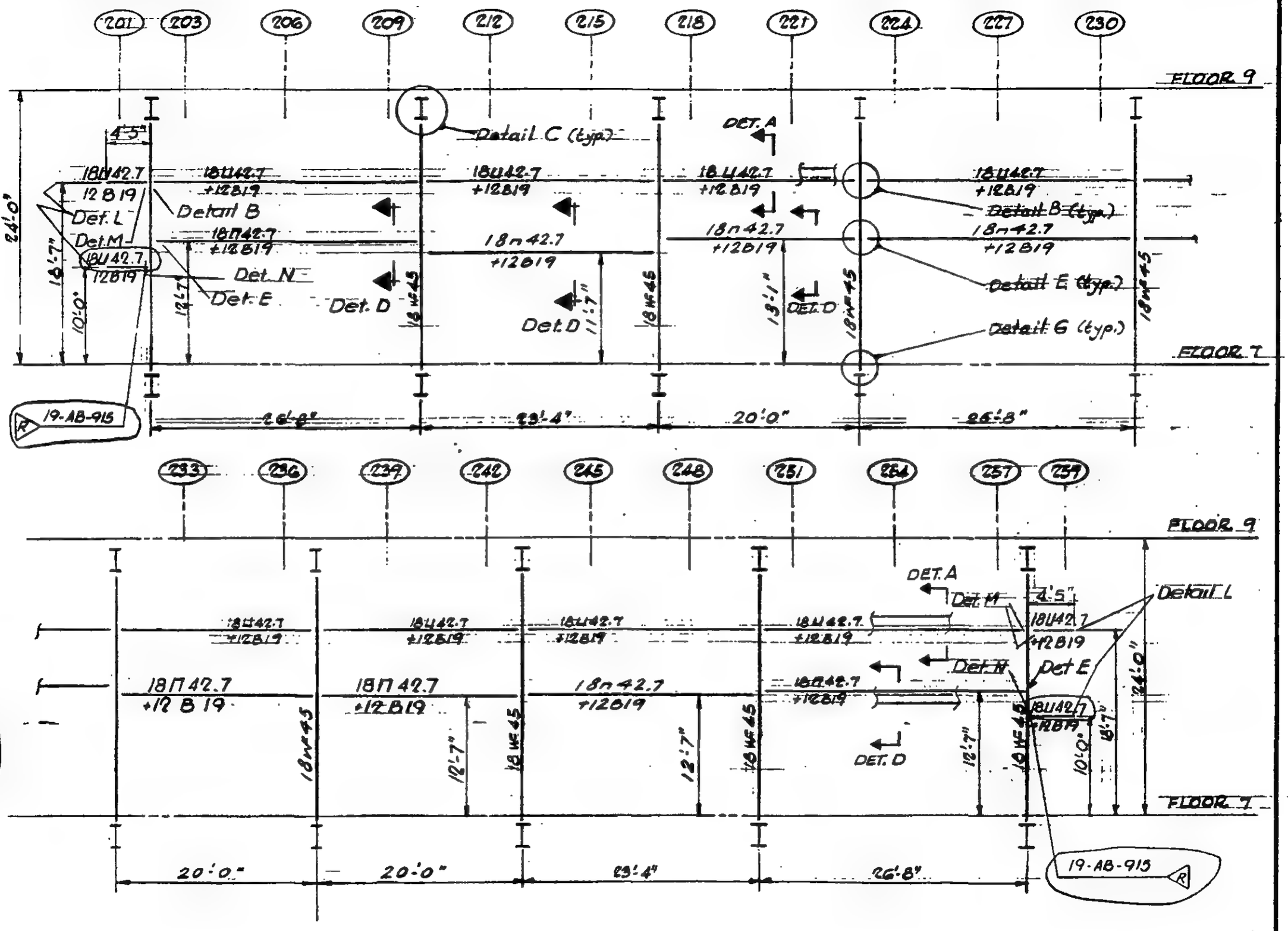

LESLIE E. ROBERTSON
No. 34960
REGISTERED PROFESSIONAL ENGINEER
UNIVERSITY OF THE STATE OF NEW YORK

G-AB4.3

WORTHINGTON, SKILLING, HELLE & JACKSON — Civil & Structural Engineers

PROJECT THE WORLD TRADE CENTER | TITLE LOUVER SUPPORTS - ELEVATION WALL 300 | DATE 12-20-67

REVISIONS

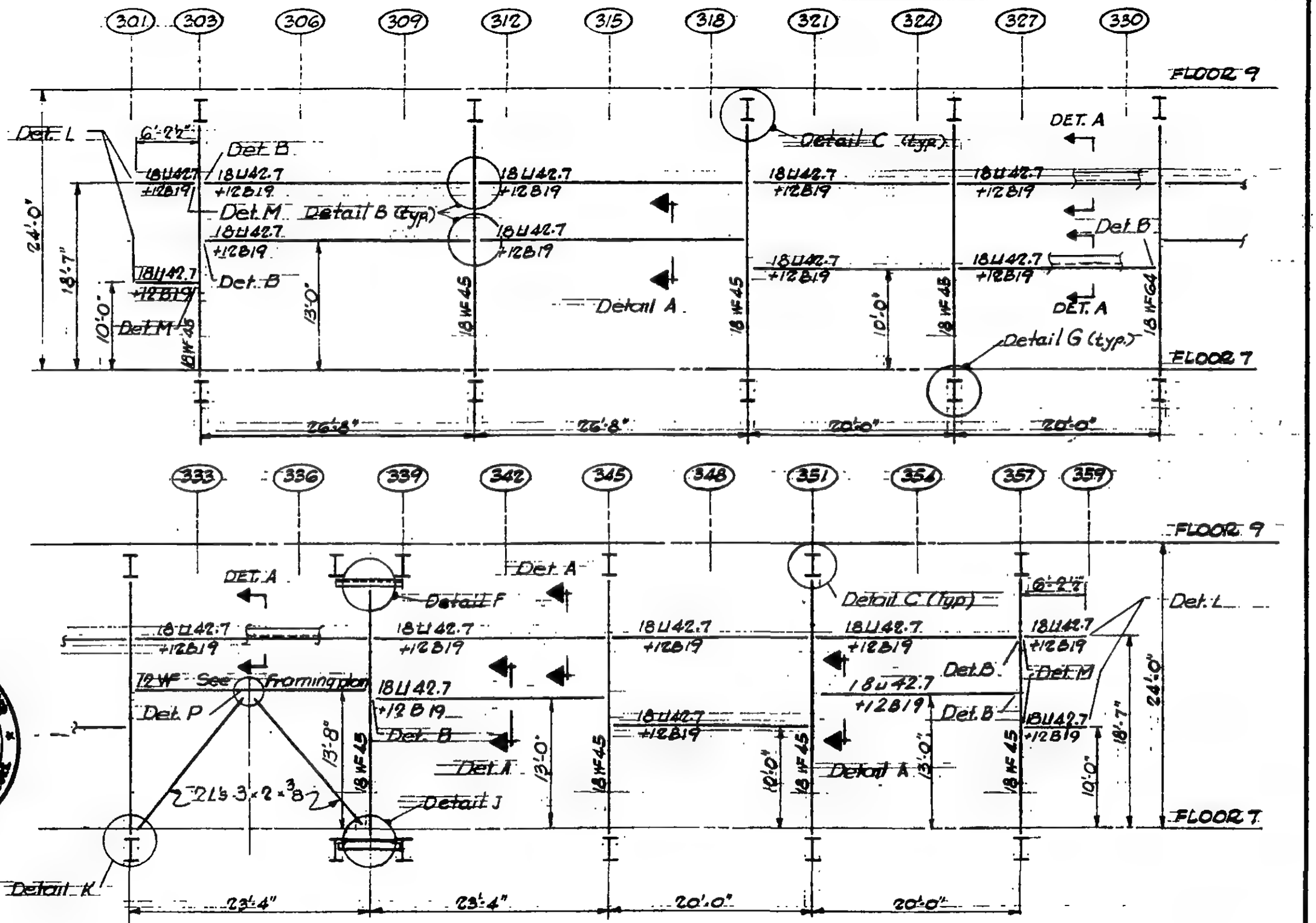

LICENSED PROFESSIONAL ENGINEER
LESLIE E. ROBERTSON
No. 24360
STATE OF NEW YORK

G-AB4-44

WORTHINGTON, SKILLING, HELLE & JACKSON — Civil & Structural Engineers

PROJECT: THE WORLD TRADE CENTER | TITLE: LOUVER SUPPORTS - ELEVATION WALL 400 | DATE: 12-20-67

REVISIONS

11-29-68

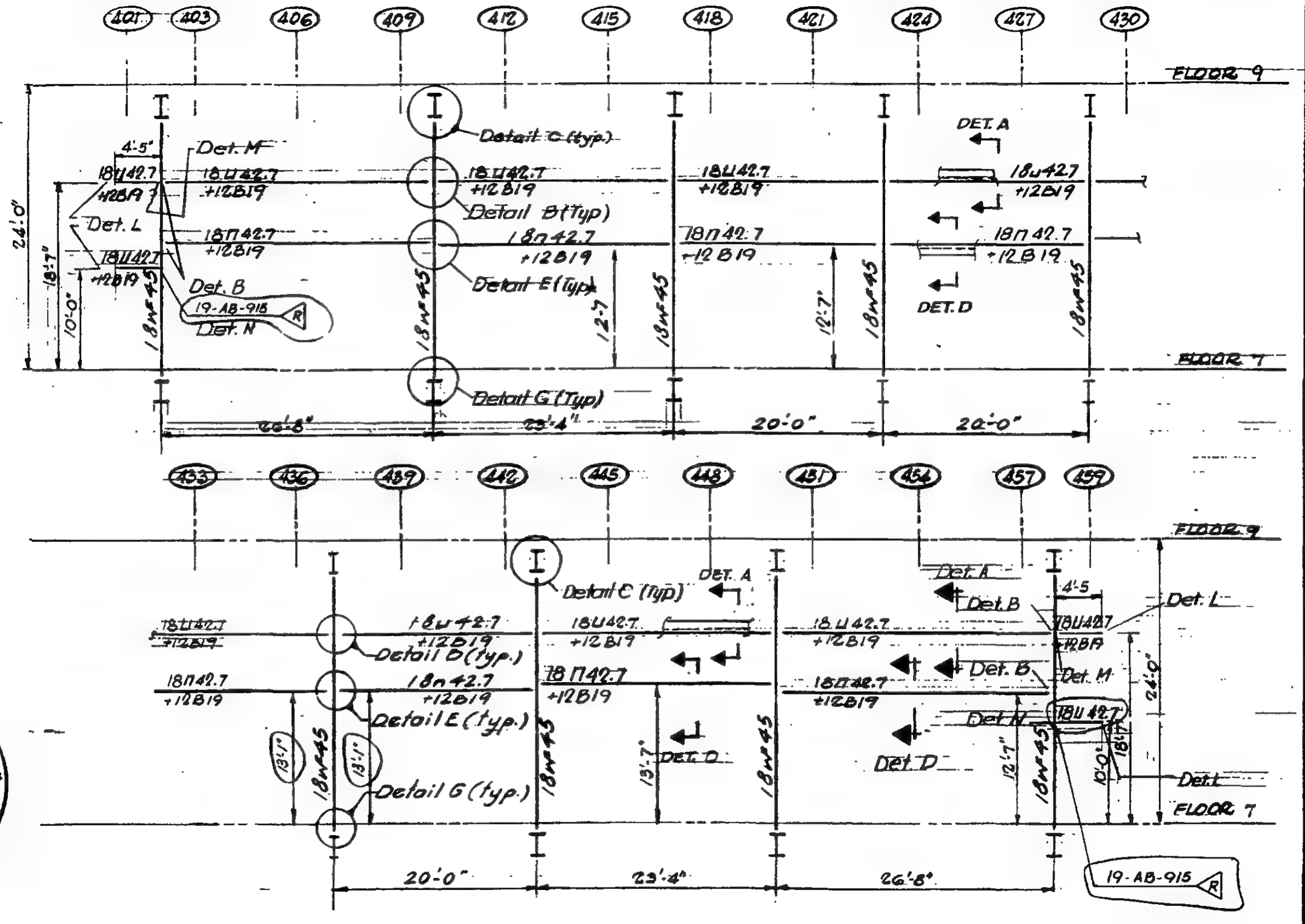

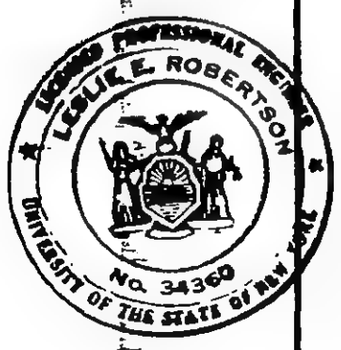

G-AB4-6

WORTHINGTON, SKILLING, HELLE & JACKSON — Civil & Structural Engineers

PROJECT: THE WORLD TRADE CENTER | TITLE: LOUVER SUPPORTS - ELEVATION WALL 100 | DATE: 12-20-67

REVISIONS

11-29-68

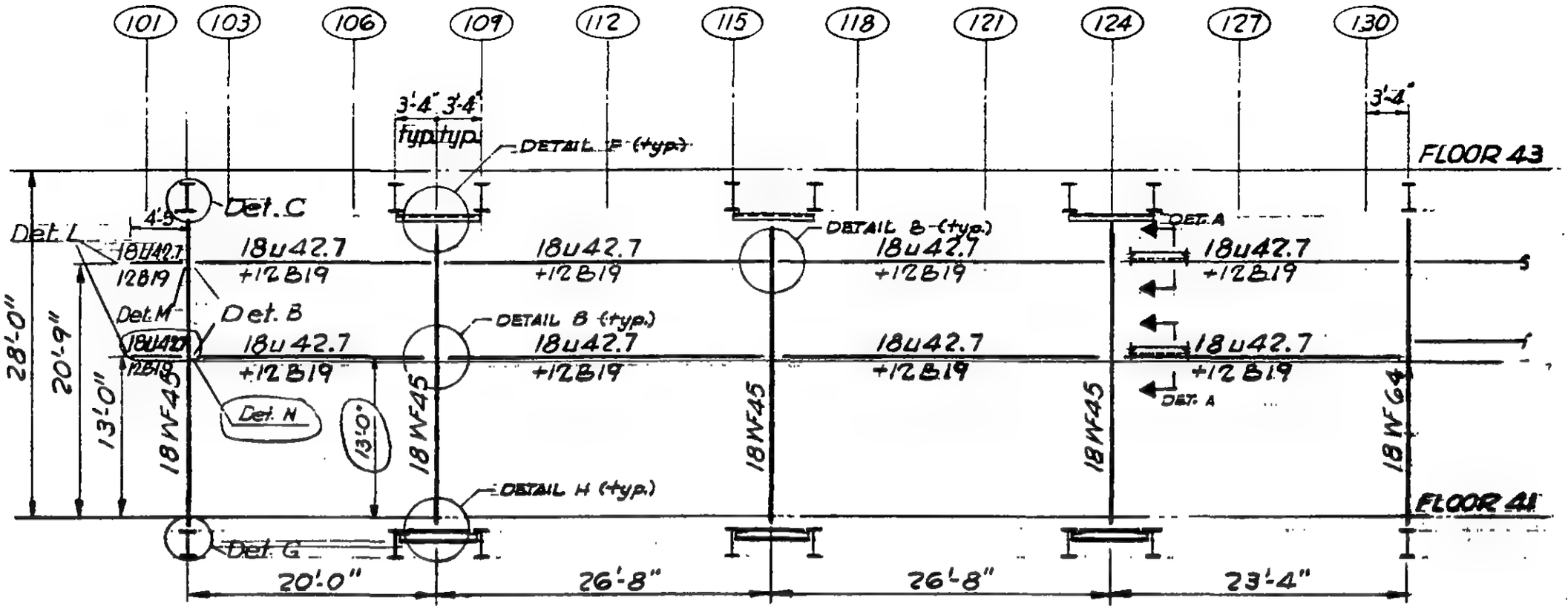

LICENSED PROFESSIONAL ENGINEER
LESLIE E. ROBERTSON
No. 34360
UNIVERSITY OF THE STATE OF N.Y.

G-AB4-G

WORTHINGTON, SKILLING, HELLE & JACKSON — Civil & Structural Engineers

PROJECT: THE WORLD TRADE CENTER | TITLE: LOUVER SUPPORTS - ELEVATION WALL 200 | DATE: 12-20-67

REVISIONS

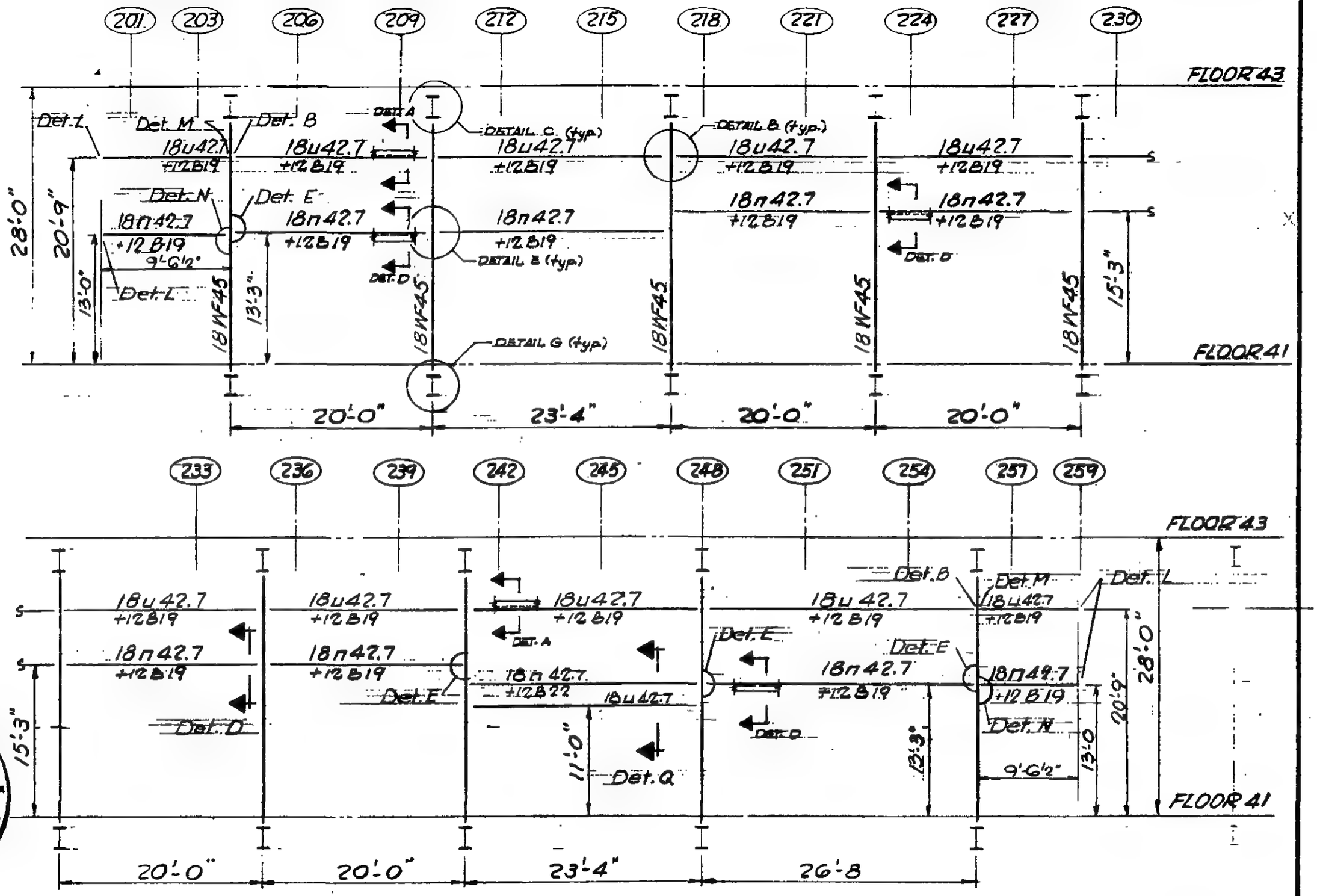

LICENSED PROFESSIONAL ENGINEER
LESLIE E. ROBERTSON
No. 34360
UNIVERSITY OF THE STATE OF NEW YORK

G-484-7

WORTHINGTON, SKILLING, HELLE & JACKSON — Civil & Structural Engineers

PROJECT: THE WORLD TRADE CENTER | TITLE: LOUVER SUPPORTS - ELEVATION WALL 300 | DATE: 12-20-67

REVISIONS

11-29-68

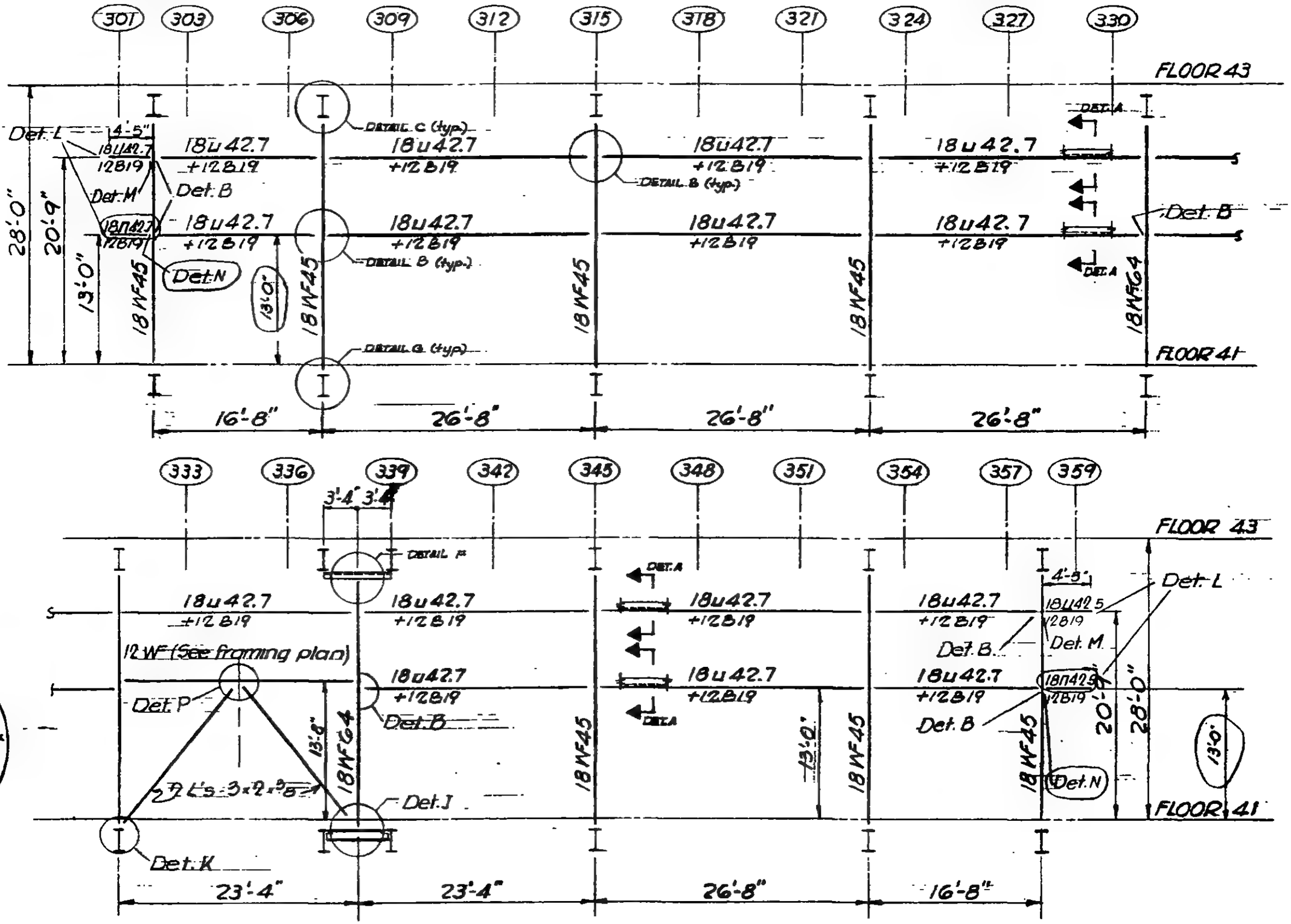

LESLIE E. ROBERTSON
No. 34360
UNIVERSITY OF THE STATE OF NEW YORK

6-ABA-8

WORTHINGTON, SKILLING, HELLE & JACKSON — Civil & Structural Engineers

PROJECT: THE WORLD TRADE CENTER

TITLE: LOUVER SUPPORTS - ELEVATION WALL 400

DATE: 12-20-67

REVISIONS

8-29-68

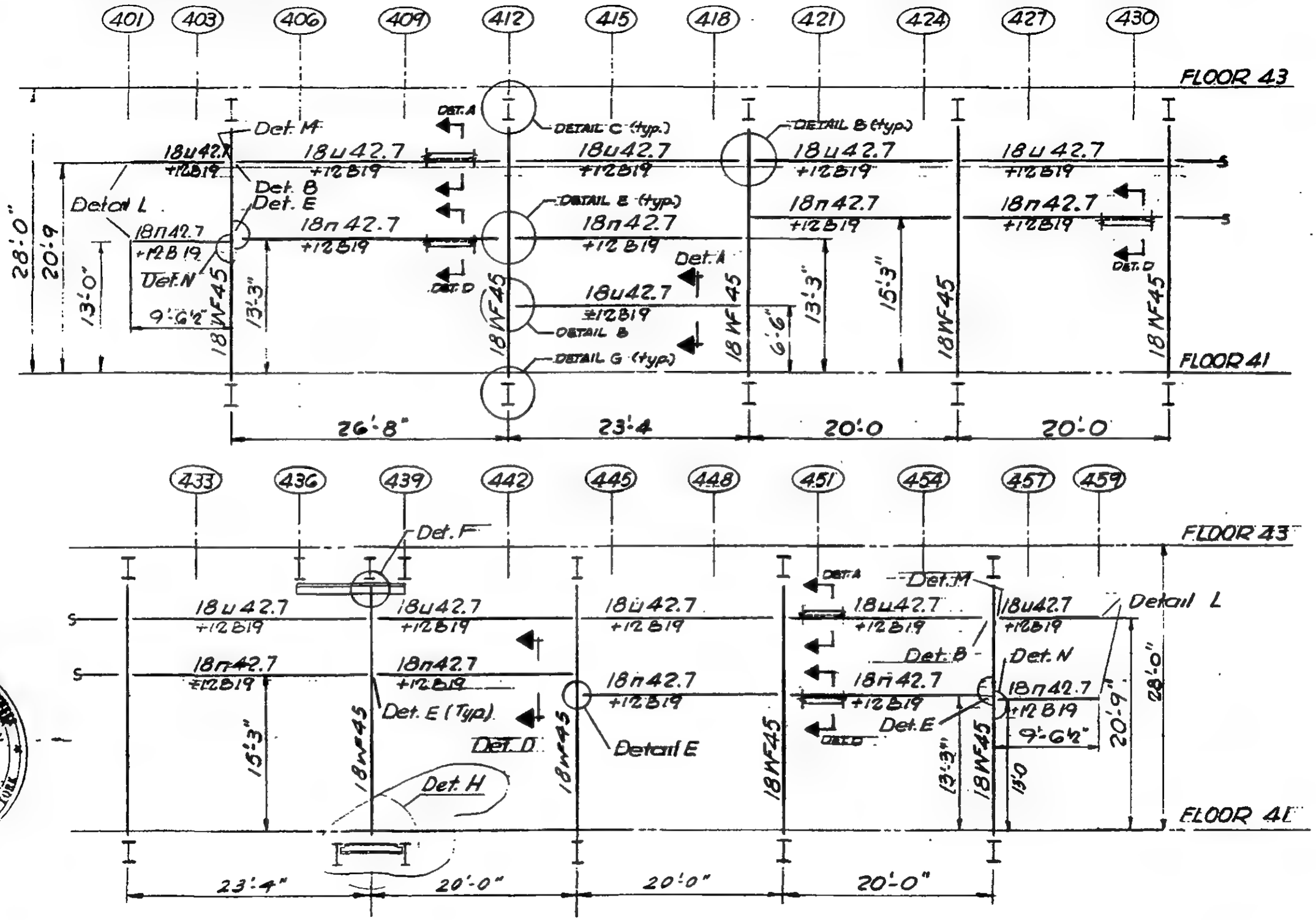

6-AB-4-9

WORTHINGTON, SKILLING, HELLE & JACKSON — Civil & Structural Engineers

PROJECT THE WORLD TRADE CENTER | TITLE ELEVATION WALL 100 - LOUVER SUPPORTS | DATE 12-20-67

REVISIONS

11-29-68

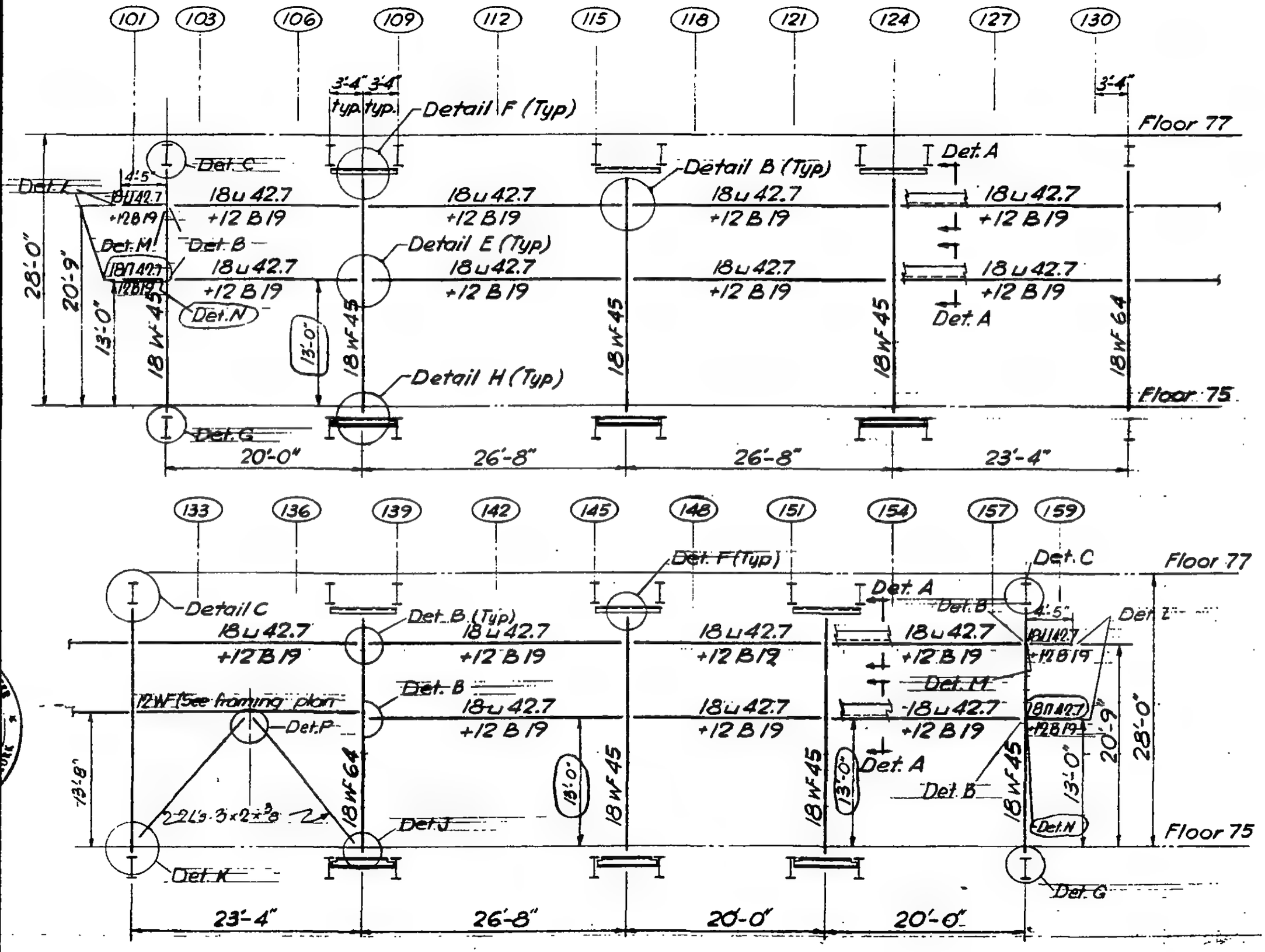

LICENSED PROFESSIONAL ENGINEER
LESLIE E. ROBERTSON
No. 34360
UNIVERSITY OF THE STATE OF NEW YORK

6-AB4-105

WORTHINGTON, SKILLING, HELLE & JACKSON — Civil & Structural Engineers

PROJECT THE WORLD TRADE CENTER | TITLE ELEVATION WALL 200- LOUVER SUPPORTS | DATE 12-20-67

REVISIONS

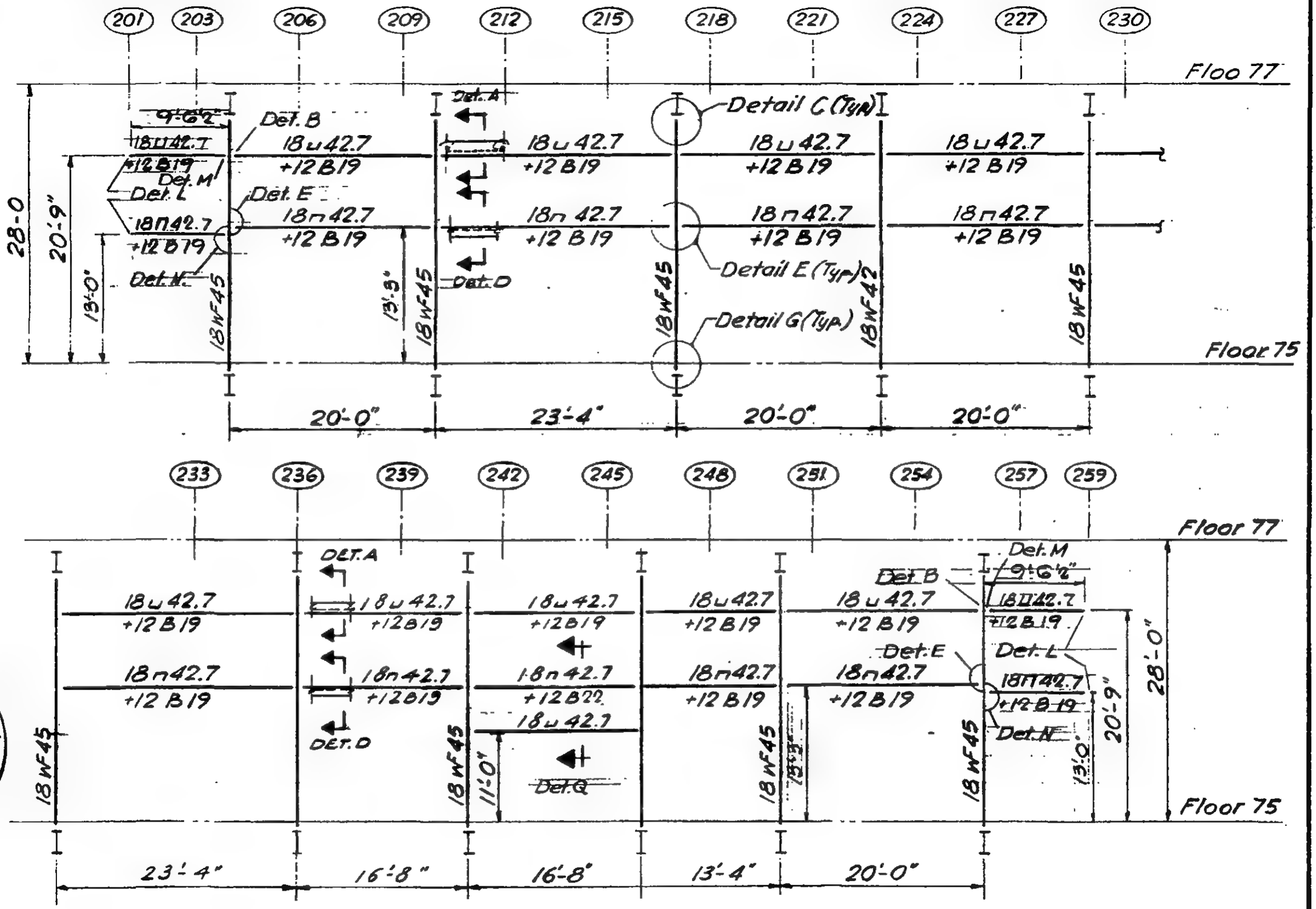

LESLIE E. ROBERTSON — LICENSED PROFESSIONAL ENGINEER — No. 34360 — UNIVERSITY OF THE STATE OF NEW YORK

G-AB4-11

WORTHINGTON, SKILLING, HELLE & JACKSON — Civil & Structural Engineers

PROJECT THE WORLD TRADE CENTER | TITLE ELEVATION WALL 300 - LOUVER SUPPORTS | DATE 12-20-67

REVISIONS

11-29-68

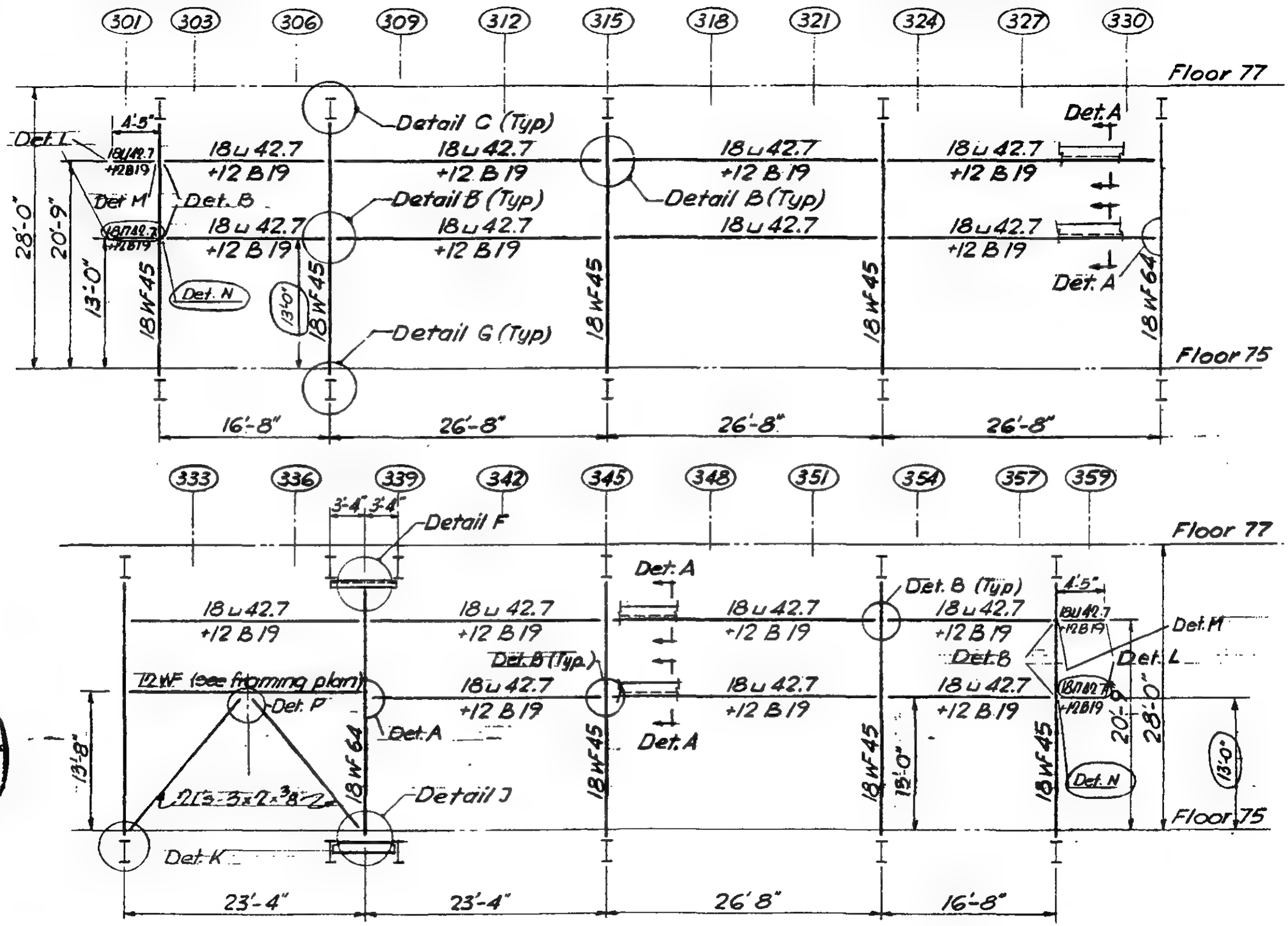

LICENSED PROFESSIONAL ENGINEER — LESLIE E. ROBERTSON — No. 34360 — STATE OF NEW YORK

6-AB4-12

WORTHINGTON, SKILLING, HELLE & JACKSON — Civil & Structural Engineers

PROJECT THE WORLD TRADE CENTER | TITLE ELEVATION WALL 400 - LOUVER SUPPORTS | DATE 12-20-67

REVISIONS

11-29-68

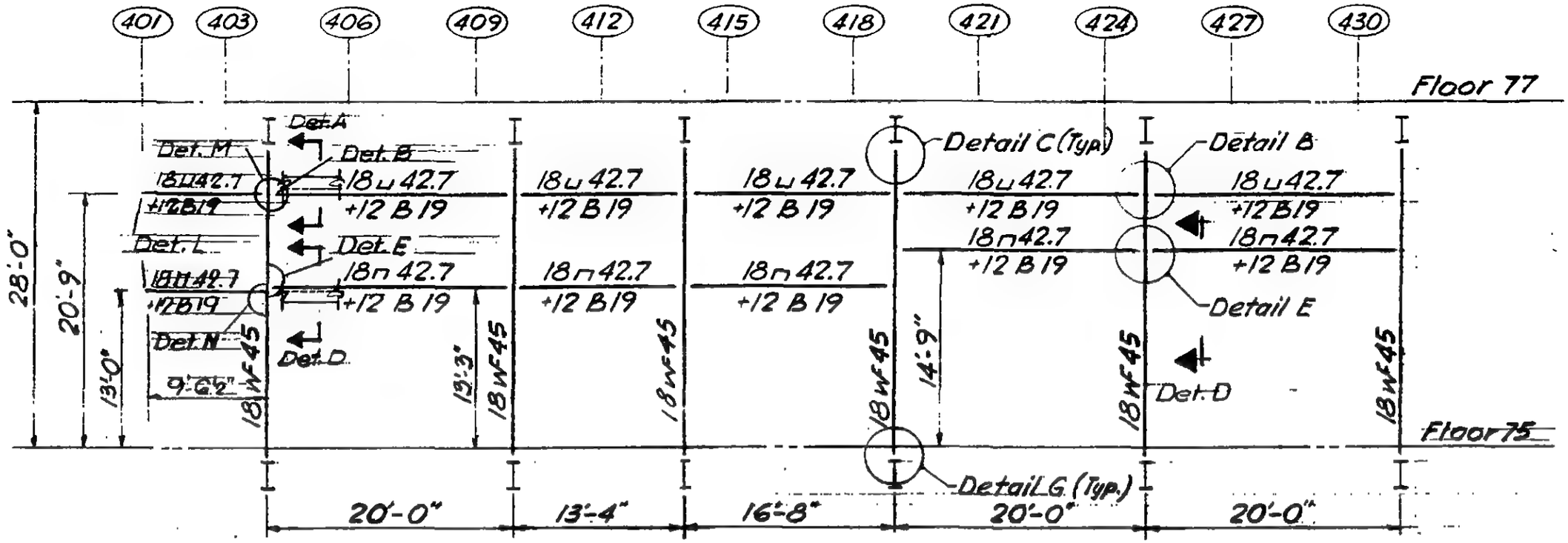

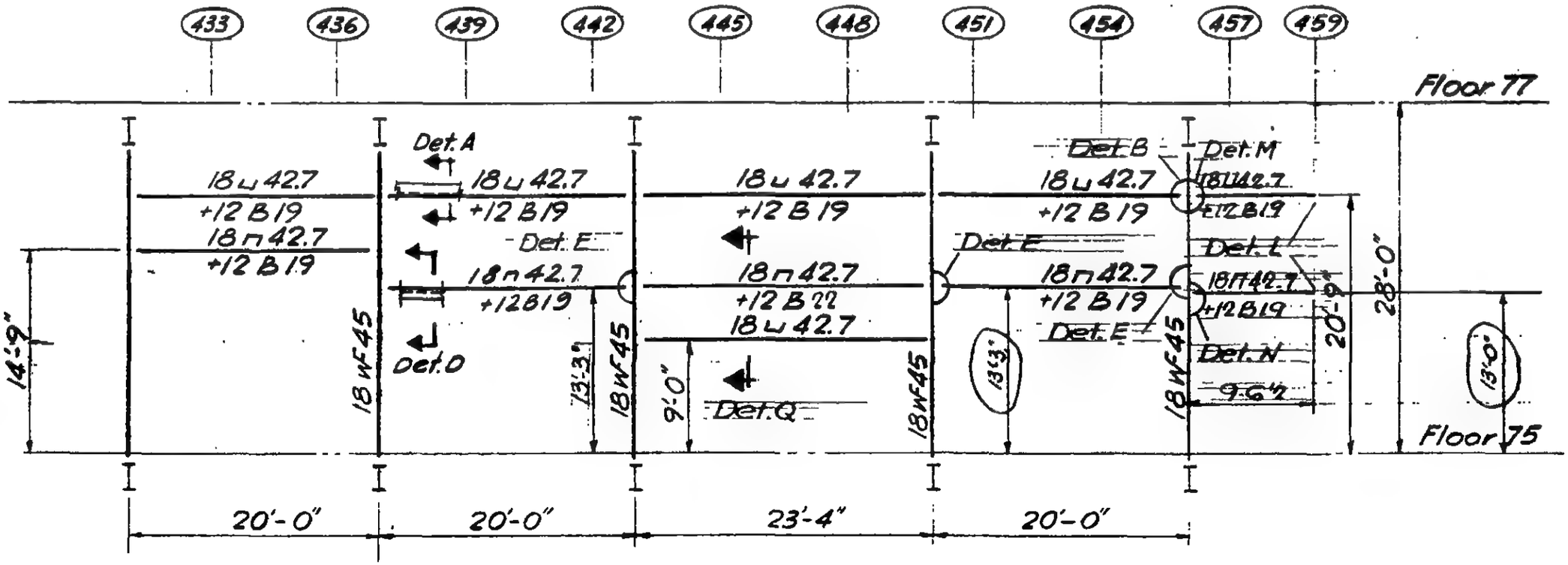

LICENSED PROFESSIONAL ENGINEER
LESLIE E. ROBERTSON
No. 34360
UNIVERSITY OF THE STATE OF NEW YORK

6-AB4-13

SKILLING - HELLE - CHRISTIANSEN - ROBERTSON Structural & Civil Engineers

PROJECT THE WORED TRADE CENTER | TITLE LOUVER SUPPORTS - DETAILS A & B | DATE 12-20-67

REVISIONS

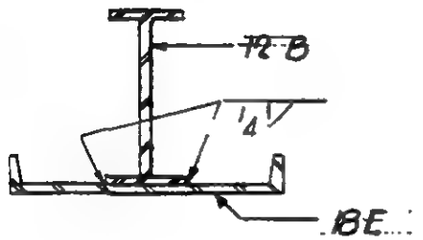

Detail A

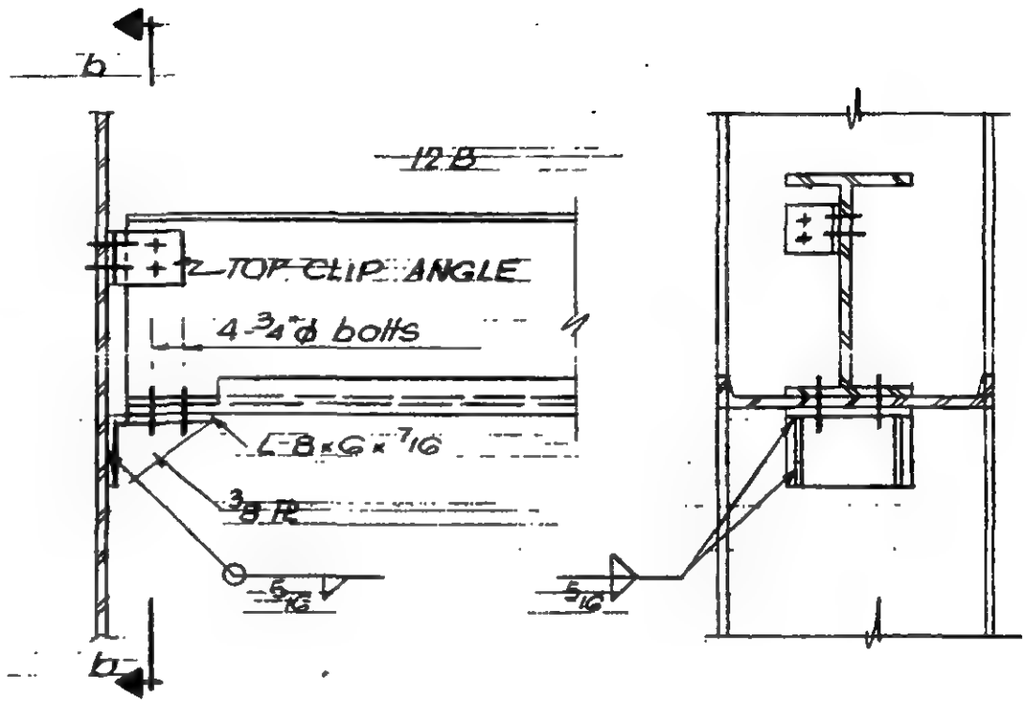

Detail B

Section b-b

LICENSED PROFESSIONAL ENGINEER
LESLIE E. ROBERTSON
No. 34360
UNIVERSITY OF THE STATE OF NEW YORK

G-AB4-18

SKILLING - HELLE - CHRISTIANSEN - ROBERTSON Structural & Civil Engineers

PROJECT THE WORLD TRADE CENTER | TITLE LOUVER SUPPORTS - DETAILS C, D & E | DATE 12-20-67

REVISIONS

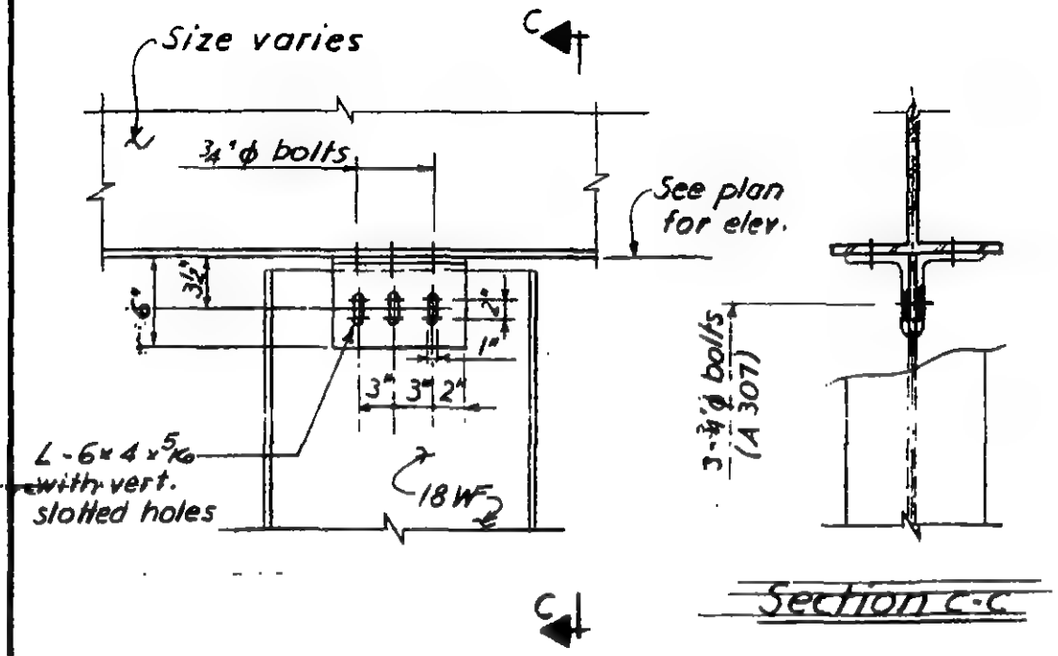

Section C-C

Detail C

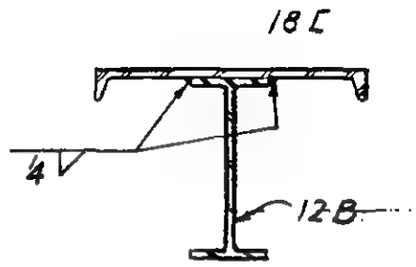

Detail D

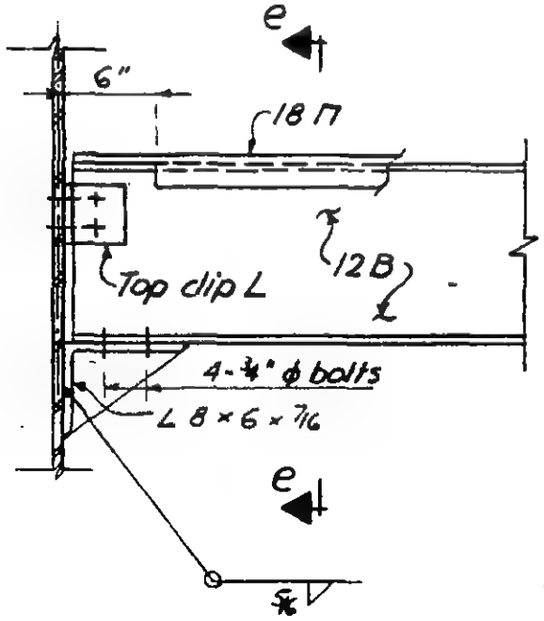

Detail E

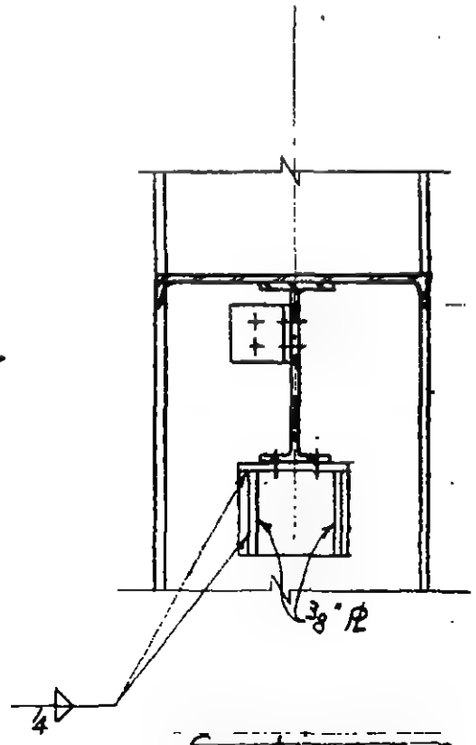

Section e-e

LICENSED PROFESSIONAL ENGINEER LESLIE E. ROBERTSON No. 34360 UNIVERSITY OF THE STATE OF NEW YORK

6-AB4-19

WORTHINGTON, SKILLING, HELLE & JACKSON — Civil & Structural Engineers

PROJECT: THE WORLD TRADE CENTER | TITLE: LOUVER SUPPORTS - DETAILS F & G | DATE: 12-20-67

REVISIONS

8-29-68

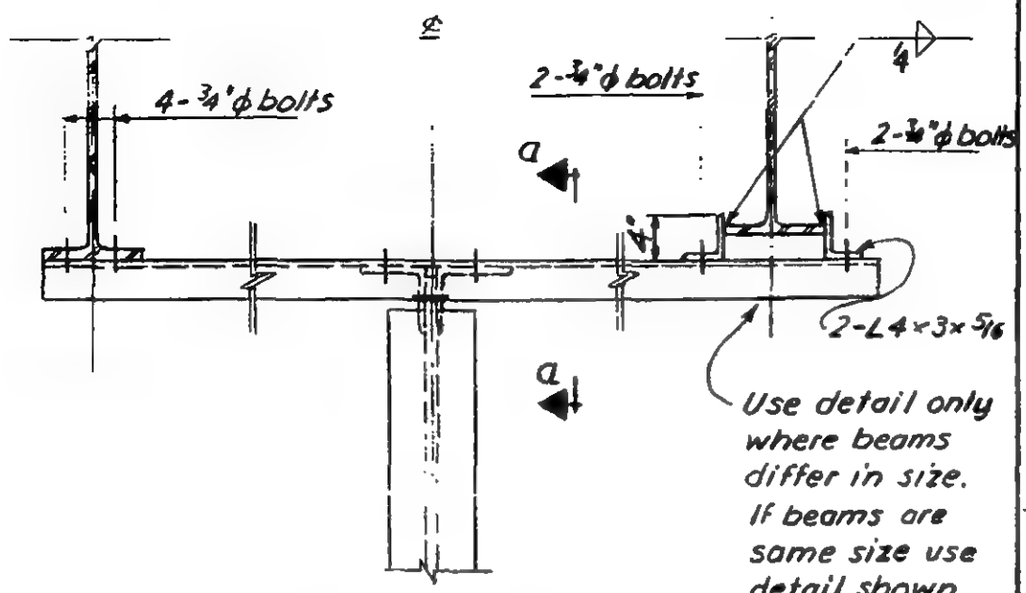

Detail F

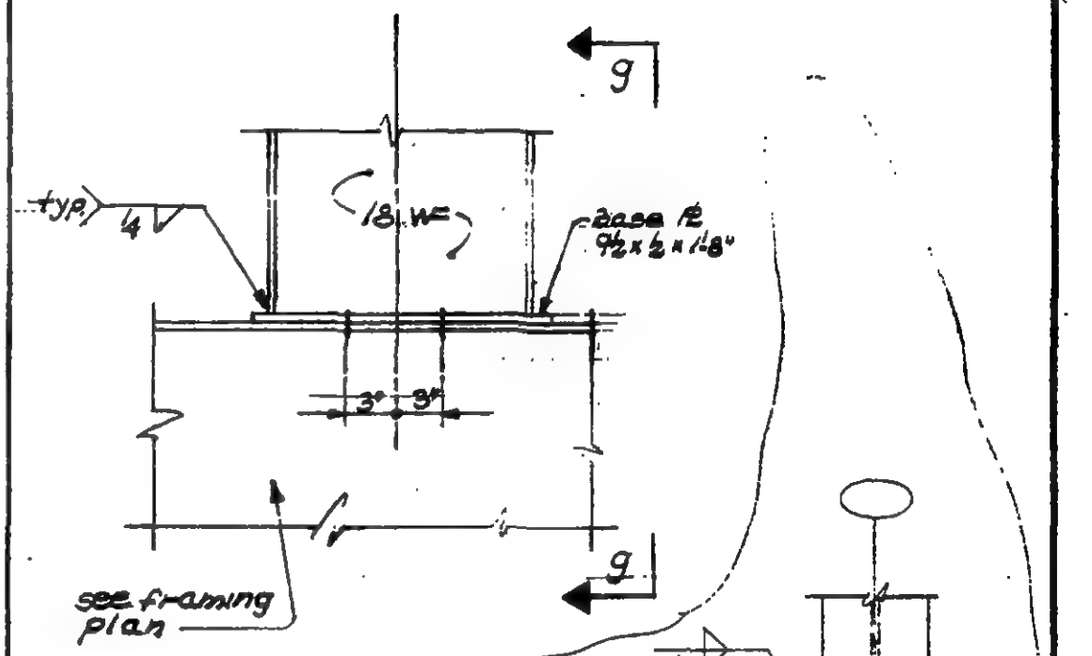

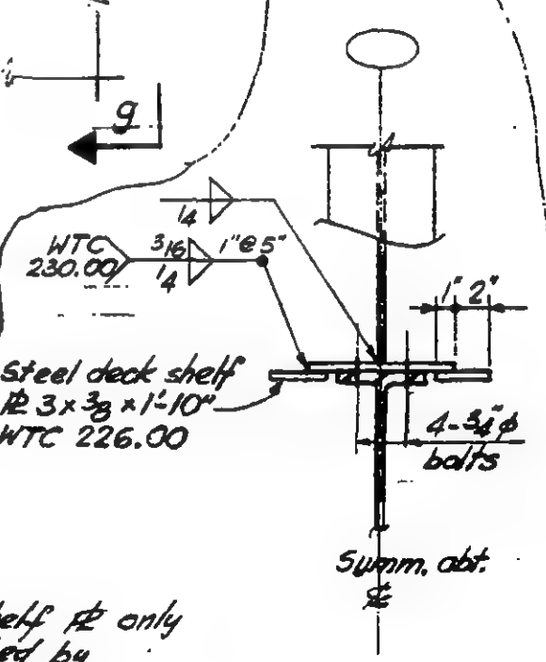

Detail G

Section g-g

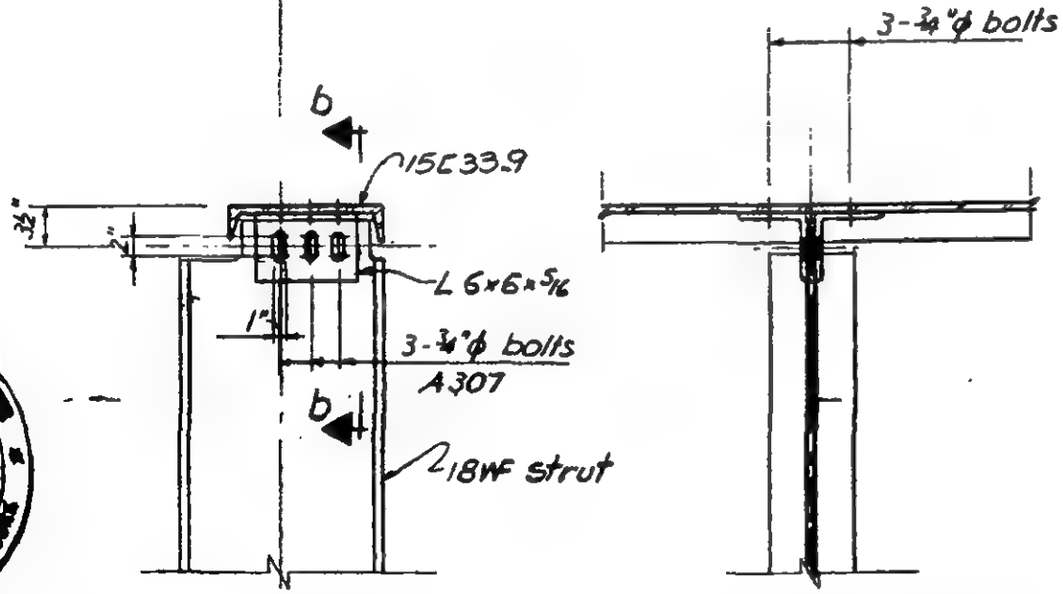

Section a-a

Section b-b

Note: Provide steel deck shelf PL only for locations indicated by schedule below:

Floor	℄ Column lines
7	103, 137, 303 & 357
41	102, 158, 302 & 358
75	102, 158, 302 & 358

LESLIE E. ROBERTSON — No. 34360 — UNIVERSITY OF THE STATE OF NEW YORK

G-48

WORTHINGTON, SKILLING, HELLE & JACKSON — Civil & Structural Engineers

PROJECT: THE WORLD TRADE CENTER | TITLE: LOUVER SUPPORTS - DETAILS H & J | DATE: 12-20-67

REVISIONS

8-29-68

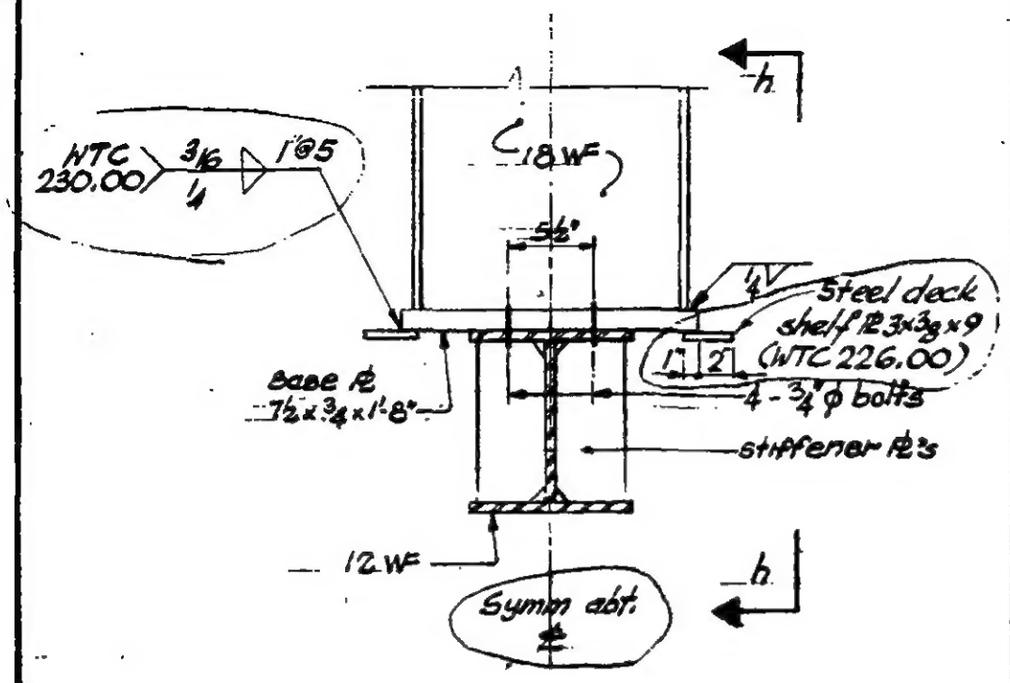

Detail H

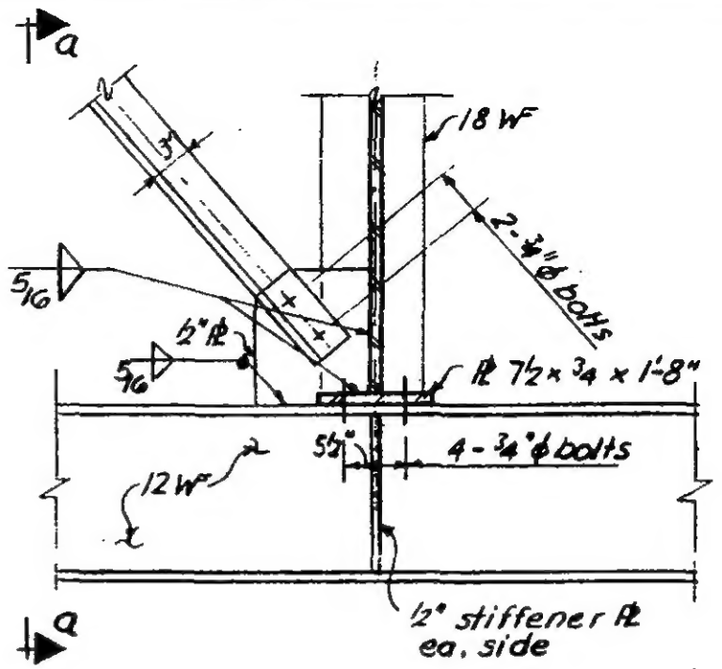

Detail J

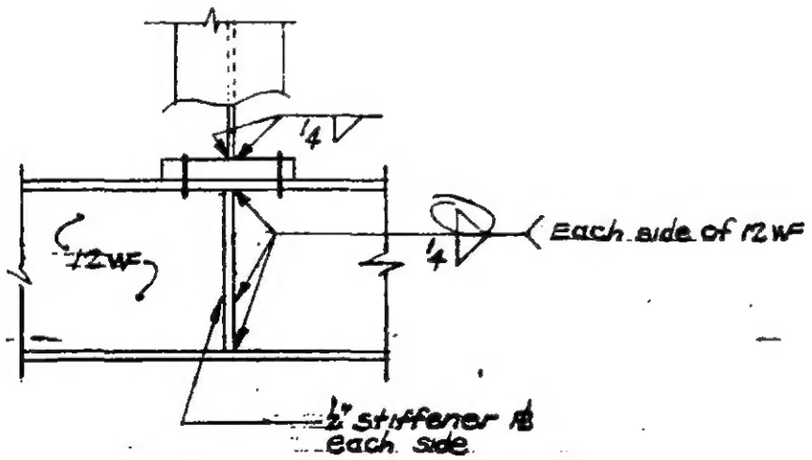

Section h-h

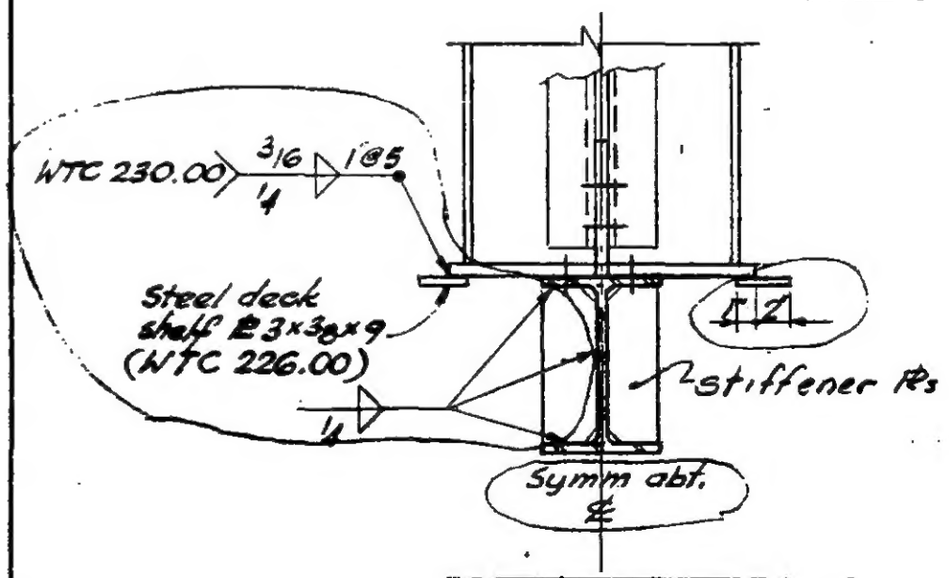

Section a-a

LICENSED PROFESSIONAL ENGINEER
LESLIE E. ROBERTSON
No. 34960
REGISTERED TO PRACTICE IN THE STATE OF NEW YORK

S-46

SKILLING - HELLE - CHRISTIANSEN - ROBERTSON Structural & Civil Engineers

PROJECT THE WORLD TRADE CENTER | TITLE LOUVER SUPPORTS - DETAILS K & L | DATE 12-20-67

REVISIONS

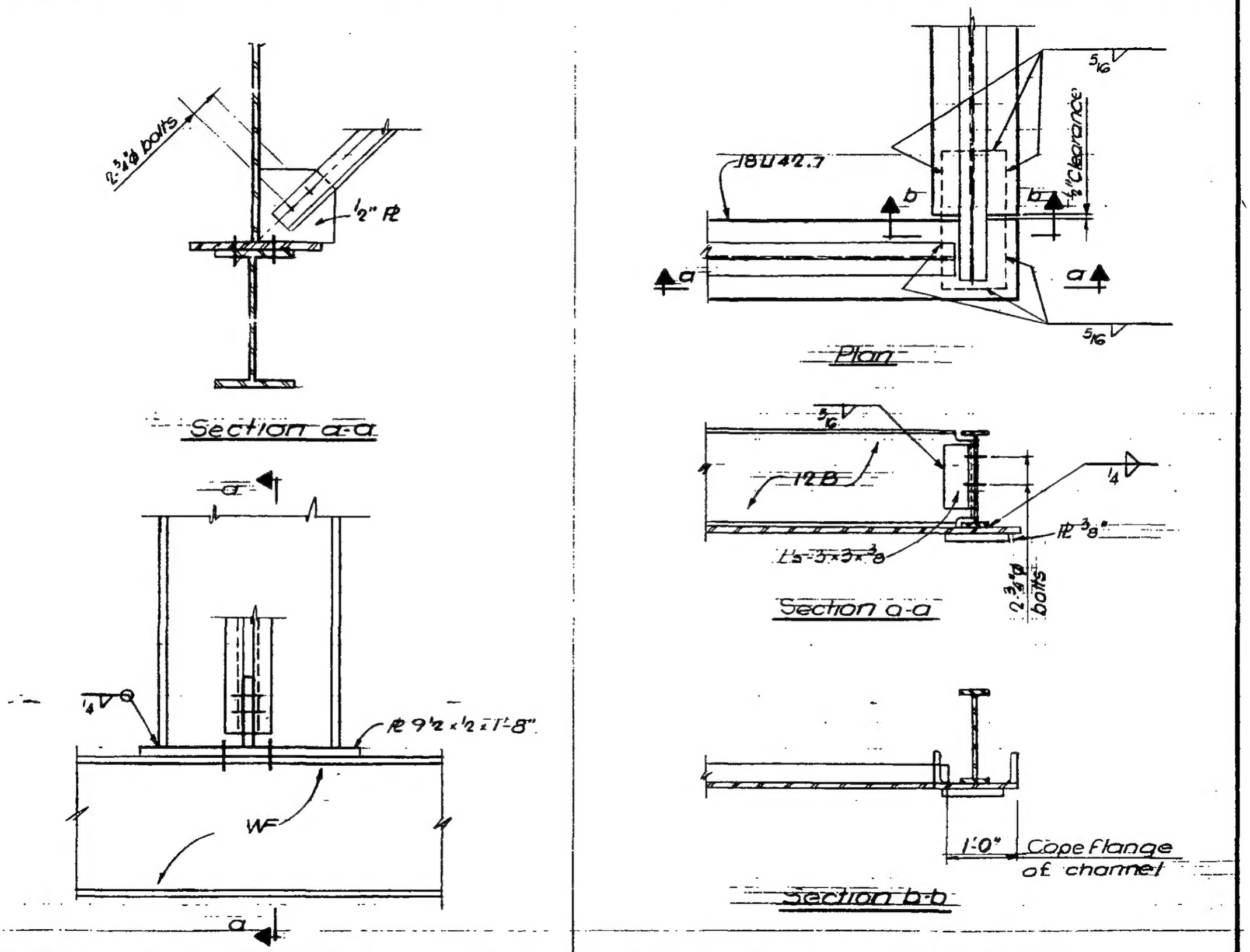

LICENSED PROFESSIONAL ENGINEER LESLIE E. ROBERTSON No. 34360 UNIVERSITY OF THE STATE OF NEW YORK

G-ABA-29

SKILLING - HELLE - CHRISTIANSEN - ROBERTSON — Structural & Civil Engineers

PROJECT THE WORLD TRADE CENTER | TITLE LOUVER SUPPORT - DETAILS M & N | DATE 12-20-67

REVISIONS

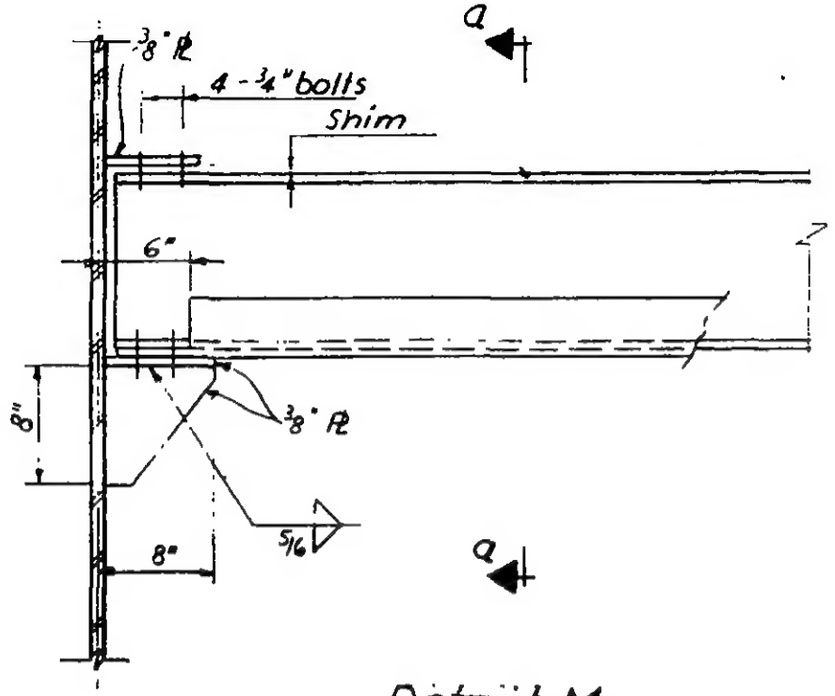

Detail M

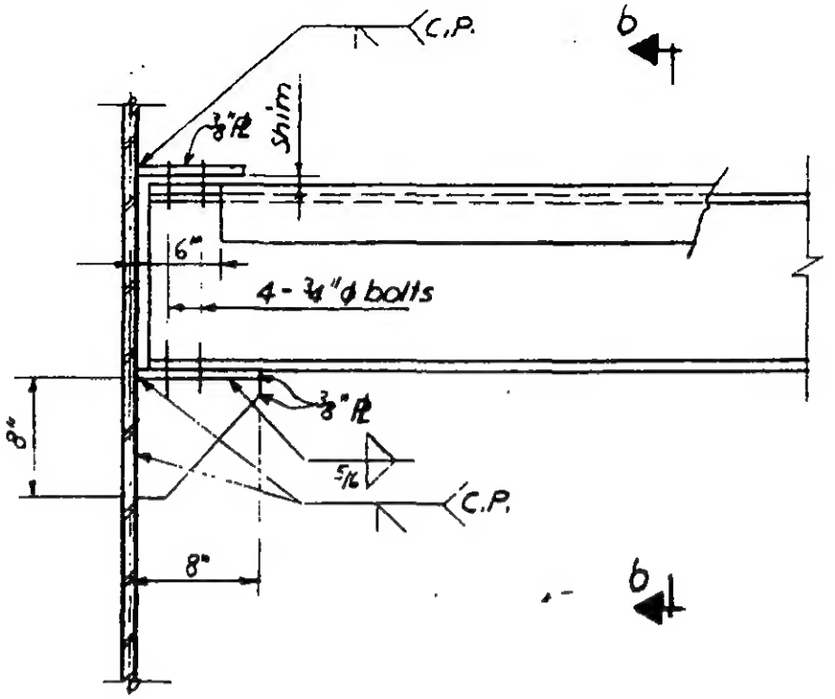

Detail N

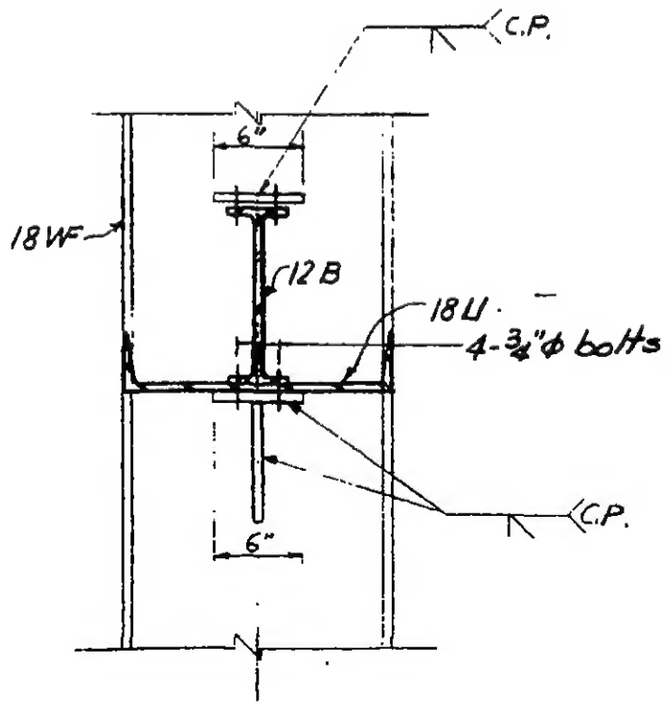

Section a-a

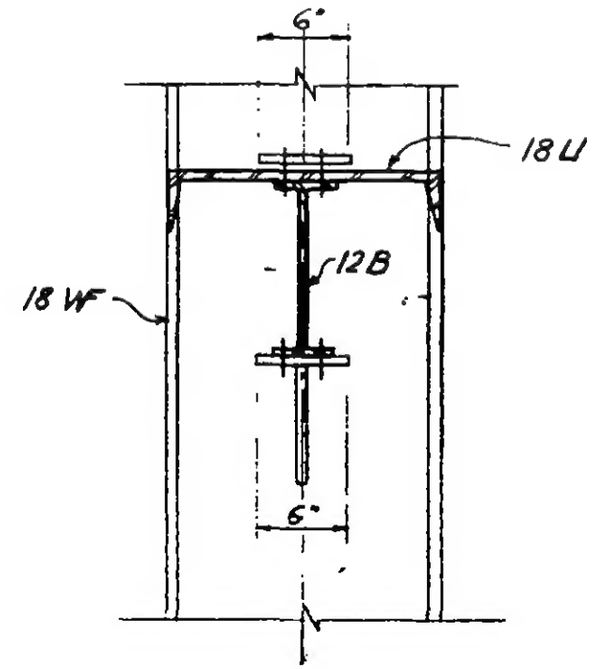

Section b-b

LICENSED PROFESSIONAL ENGINEER
LESLIE E. ROBERTSON
No. 34360
UNIVERSITY OF THE STATE OF NEW YORK

6-AB4-23

SKILLING - HELLE - CHRISTIANSEN - ROBERTSON Structural & Civil Engineers

PROJECT THE WORLD TRADE CENTER | TITLE LOUVER SUPPORT - DETAILS P & Q | DATE 12-20-67

REVISIONS

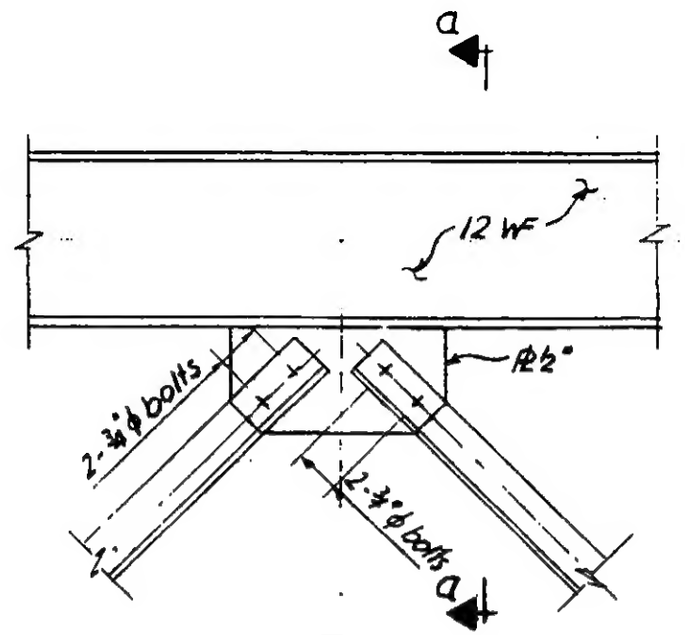

Detail P

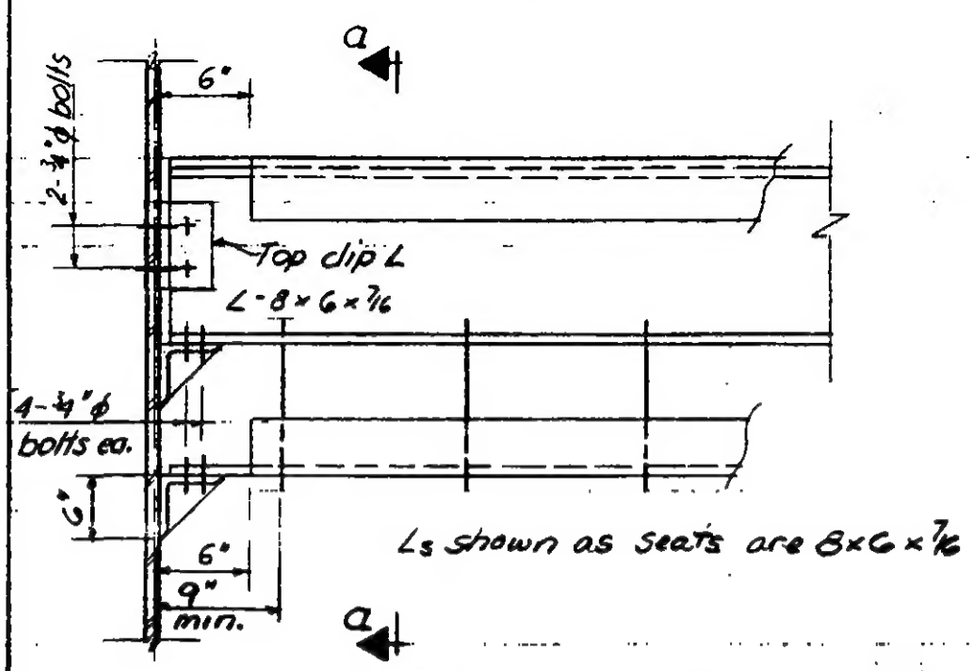

Detail Q

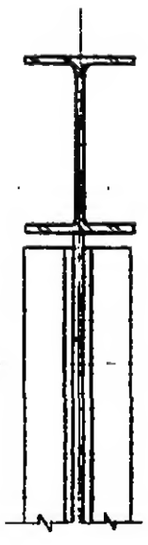

Section a-a

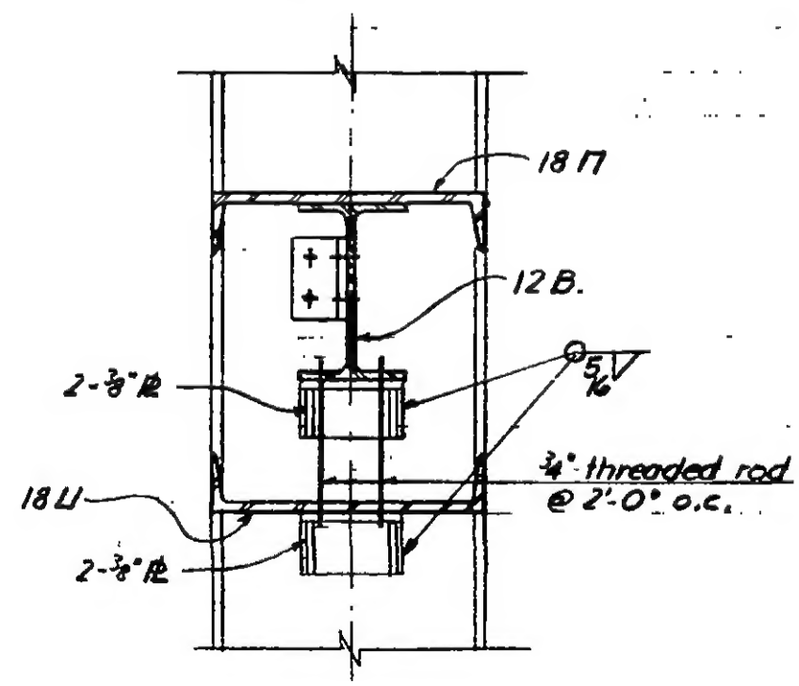

Section a-a

LICENSED PROFESSIONAL ENGINEER LESLIE E. ROBERTSON No. 34360 UNIVERSITY OF THE STATE OF NEW YORK

6-AB4-24